RTCA Special Committee 186

Working Group 6

ADS-B / ASA MASPS Maintenance

Meeting #24

RTCA - Washington, DC

3 – 4 May 2011

3.2.2.2 TIS-B and ADS-R Service Description

(from) Proposed Table of Contents for the Combined DO-242B and DO-289 Super MASPS

Michael Garcia, ITT

Mike Mann, ITT

SUMMARY

This Working Paper is a draft for section 3.2.2.2 of the new ASA/ADS-B MASPS to describe the SBS TIS-B and ADS-R services.

3.2.2.2 TIS-B and ADS-R Service Description

This section defines the Automatic Dependent Surveillance-Rebroadcast (ADS-R) and Traffic Information Broadcast Services (TIS-B) services provided by the Surveillance and Broadcast Services System (SBS – Ground System). Together, ADS-R and TIS-B, provide the ADS-B user pilot's CDTI with aircraft/vehicle (A/V) position data that will compliment and complete the view of neighboring traffic.

ADS-R is an SBS service that receives ADS-B-OUT position broadcasts and rebroadcasts that information to aircraft in the vicinity equipped with a different ADS-B data link. ADS-R service provides for interoperability between ADS-B equipped aircraft with different data inks.

TIS-B is a surveillance service that derives traffic information from FAA radar/sensor sources, and uplinks this traffic information to ADS-B-equipped aircraft. TIS-B enables ADS-B-equipped aircraft to receive position reports on non-ADS-B-equipped aircraft in the NAS. *Note: TIS-B Service is intended for the transition period to full ADS-B equipage.*

Figure Error! **No text of specified style in document.**-1 illustrates the top-level architecture for the SBS – Ground System. It is composed of three segments: Radio Station, Control, and Network. ADS-R and TIS-B services are provided to aircraft at the air interface (top of figure). Surveillance and sensor data are provided to the TIS-B service as shown at the bottom of the figure (FAA TIS-B Data SDP). ADS-B surveillance data are provided to the ADS-R service within the Radio Segment, the determination of user need for ADS-R service and scheduling of ADS-R messages is performed within the Control Segment.

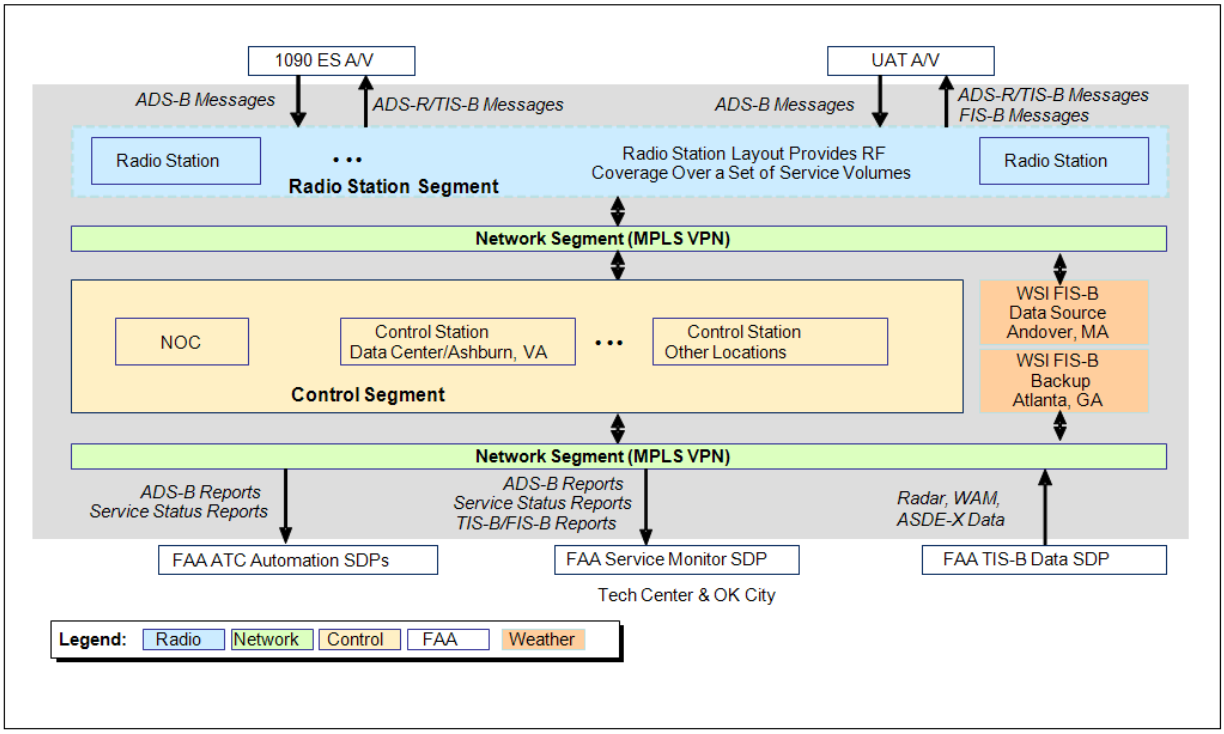

Figure *Error! No text of specified style in document.****-1: SBS System Reference Architecture***

3.2.2.2.1 ADS-R Service

Automatic Dependent Surveillance–Rebroadcast (ADS-R) is a service that relays ADS-B information transmitted by an aircraft using one link technology to aircraft of an incompatible link technology. The high level data flows supporting ADS-R are illustrated in Figure 3-2 below. The SBS – Ground System control station infrastructure monitors ADS-B transmissions by active ADS-B equipped aircraft and continuously monitors the presence of proximate aircraft with incompatible link technologies (i.e., UAT and 1090ES). When such aircraft are in proximity of each other, the SBS – Ground System control station infrastructure instructs ground radio stations within range of both aircraft to rebroadcast surveillance information received on one link frequency to aircraft on the other link frequency. The ADS-R Service currently supports only advisory level surveillance applications.

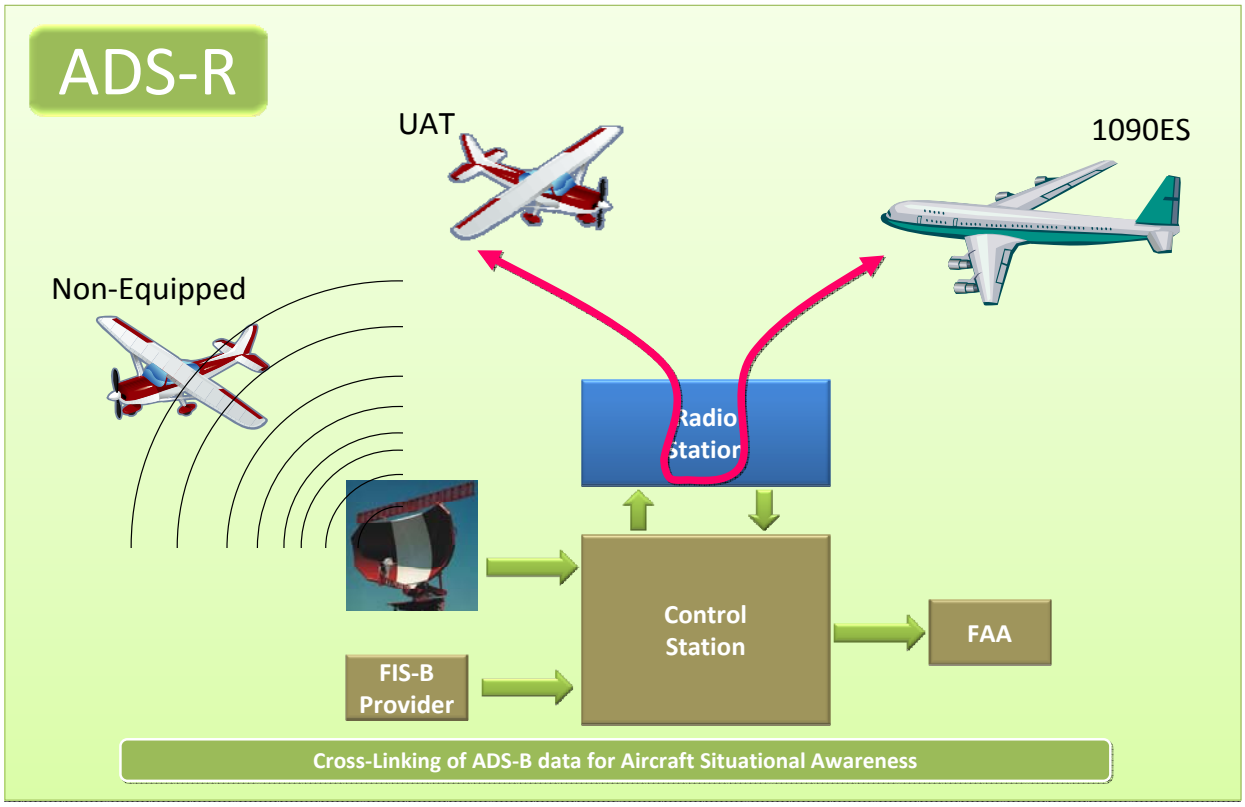

Figure** Error! No text of specified style in document.-2: **ADS-R Service Data Flows Data

3.2.2.2.1.1 ADS-R Concept of Operations:

Since two incompatible ADS-B link technologies are allowed, aircraft equipped with a single link technology input will not be able to receive ADS-B transmissions from the other link technology, and therefore will be unable to receive all ADS-B transmissions. The ADS-R service closes this gap. In defined airspace regions, the ADS-R service will receive ADS-B transmissions on one link, and retransmit them on the complementary link when there is an aircraft of the complementary link technology in the vicinity.

An aircraft or vehicle that is an active ADS-B user and is receiving ADS-R service is known as an ADS-R *Client*. An ADS-B equipped aircraft or vehicle on the opposite link of the ADS-R Client that has its messages translated and transmitted by the SBS System is known as an ADS-R *Target*.

Figure 3-3 describes a more detailed ADS-R and TIS-B functional data flow. ADS-B dual data link equipped aircraft or vehicles (1090ES and UAT), shown at the top of the figure, do not require ADS-R service as they will receive ADS-B messages directly from single and dual data link equipped aircraft and vehicles.

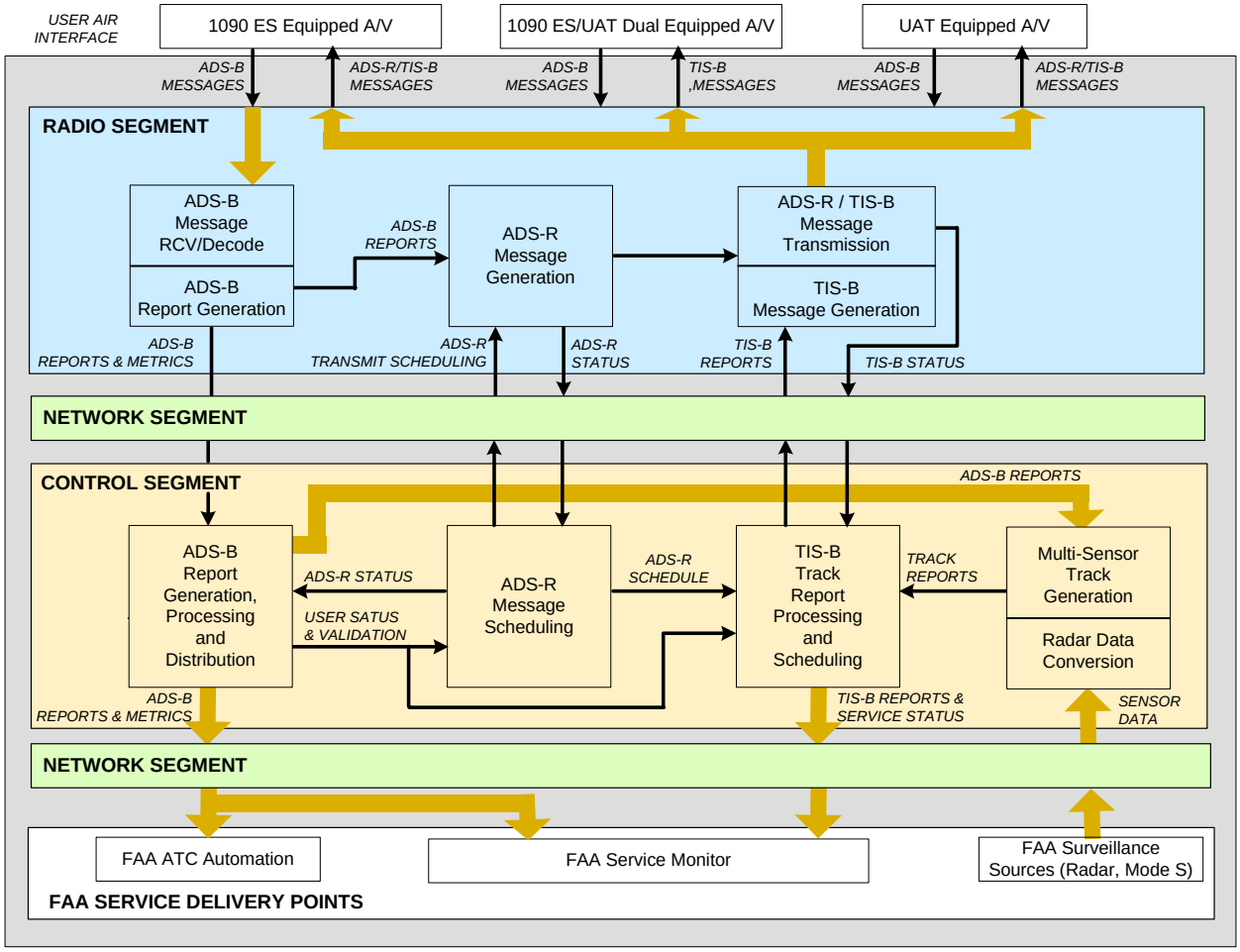

***Figure** Error! No text of specified style in document.-3: ADS-R and TIS-B Functional Architecture and Data Flows*

3.2.2.2.1.2 ADS-R Client Identification

In order to receive ADS-R service an aircraft must be in an airspace region where the ADS-R service is offered, must be ADS-B-OUT, must have produced valid position data within the last 30s to a SBS ground station, and must be ADS-B-IN on only one link (If ADS-B-IN on both links, ADS-R is not needed). The SBS – Ground System

monitors the received ADS-B reports to identify active ADS-B users, and the ADS-B-IN link technologies operating on the aircraft.

Note: With respect to the user aircraft/vehicle (A/V) data links; ADS-B-OUT indicates the A/V can transmit ADS-B messages, ADS-B-IN indicates the A/V can receive service messages such as ADS-R and TIS-B. A dual data link equipped A/V can transmit and receive both 1090ES and UAT services.

ADS-R client identification is provided by the ADS-B Report Generation, Processing, and Distribution function shown in Figure 3-3 Control Segment block and sent to the ADS-R Message Scheduling function (User Status and Validation). The identification information contained in the "User Status and Validation" message includes:

1. A/V ICAO Address
2. Link Technology Indicator

In addition the ADS-B Report Generation, Processing, and Distribution function provides the A/V's:

1. Position data
2. Altitude
3. Validation Status

A/V validation status is referring to the capability of the SBS Control Station Segment providing an independent validation of the position information received in the ADS-B Messages. In certain Service Volumes, the FAA will require that the ADS-B Service provide independent validation. The validation capability may assure to a specified probability that each ADS-B Message, and the position information contained within, is from a real aircraft/vehicle with a valid position source rather than from a source broadcasting erroneous information or a spoofer. The validation methods are:

1) Comparison of ADS-B position data to radar position data,
2) Comparing a one way "passive range" with range to target indicated by ADS-B position data (available for UAT equipped targets),
3) Use of time difference of arrival techniques.

3.2.2.2.1.3 ADS-R Target Identification

The SBS – Ground System identifies all aircraft that need to receive ADS-R transmissions for each active ADS-B transmitter. It does this by maintaining a list of all active ADS-B users, and their associated input link technologies. ADS-R target identification is provided by the ADS-B Report Generation, Processing, and Distribution function shown in Figure 3-3 Control Segment block and sent to the ADS-R Message Scheduling function. The identification information is contained in the targets ADS-B-OUT messages; the ID information includes:

1. A/V ICAO Address
2. Link Technology Indicator

For each transmitting ADS-B aircraft the SBS – Ground System determines all aircraft that do not have ADS-B-IN of the same link technology, that are within the vicinity, and need to receive ADS-R transmissions.

3.2.2.2.1.4 ADS-R in Enroute and Terminal Airspace Domains

To determine if a client requires ADS-R service, the SBS – Ground System will examine all candidate proximity aircraft, i.e. aircraft within a 15 NM horizontal range and +/- 5000 ft altitude of a client aircraft as shown in Figure 3-4. Aircraft that do not have ADS-B-IN of the same link technology as the client, and they are within the cylinder shown in Figure 3-4, are candidate ADS-R targets whose ID, position data, etc are required to be transmitted to the client.

In addition, ADS-B targets in a ground state are not provided to ADS-B-IN airborne clients, i.e. airborne clients within the Enroute or Terminal SVs.

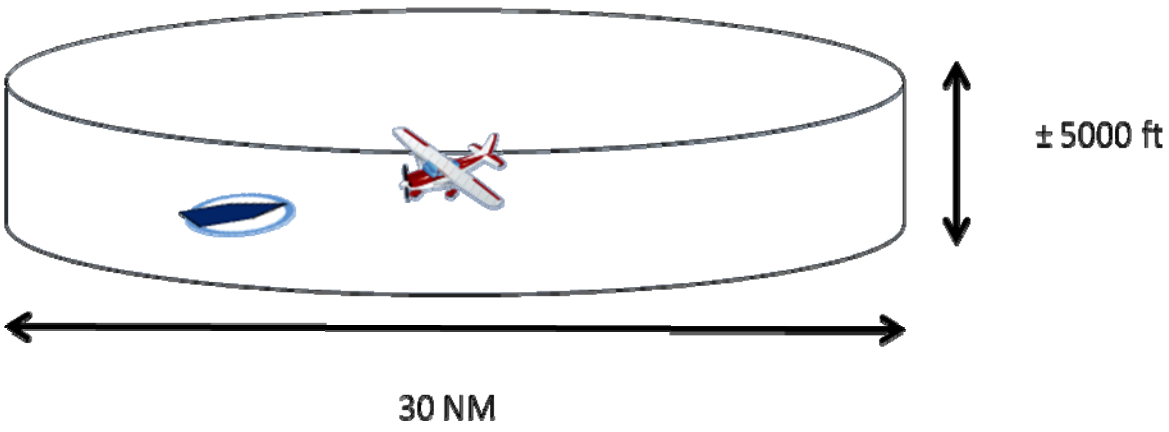

Figure** Error! No text of specified style in document.**-4: ADS-R Client Proximity Determination

3.2.2.2.1.5 ADS-R in Surface Domains

In a surface domain SV, a client is provided all applicable ADS-R targets in SV domain. This includes all targets in the ground state within the movement area (runways and taxiways) as well as all airborne targets within 5 NM and 2000 ft AGL of the airport reference point (ARP).

3.2.2.2.1.6 Transmission of ADS-R Targets over the Air Interface

Each ADS-R Target aircraft may have one or more client aircraft that need to receive ADS-R transmissions, possibly in different domains. The SBS – Ground System determines the ADS-R transmission rate required by the client in the most demanding domain. The SBS – Ground System also determines the radio or set of radios necessary to transmit ADS-R messages to all clients.

If a radio selected for transmissions to a client is also receiving transmissions from the client the ADS-R Message Scheduling function shown in Figure 3-3 prepares an ADS-R transmission schedule and submits it to the radio. The ADS-R transmission schedule identifies the 24-Bit address of the target aircraft, and an update interval. When the radio receives transmissions from the target aircraft it will retransmit the

report on the opposite link, according to the provided schedule. Most ADS-R transmissions are of this type. In the uncommon case where a client and target are not served by a common radio, the SBS – Ground System will receive the ADS-B report from the receiving radio, and forward the report to the transmitting radio.

A client aircraft that is receiving ADS-R service will receive reports for ADS-B aircraft on the opposite link within its vicinity. Since a single target may have multiple clients, sometimes in different domains, a client may receive ADS-R reports more frequently than required for the client's domain. An aircraft may also be in range of a ground radio station that is transmitting reports required by other aircraft. When this is the case the client aircraft will receive reports of aircraft that are outside the altitude and horizontal range of its vicinity.

The cumulative number of messages transmitted by all SBS – Ground System radio stations within reception range of any aircraft in the NAS will not exceed 1,000 1090ES messages per second with received signal strength greater than -78 dBm. This limit applies to both the ADS-R and TIS-B Service combined. The cumulative maximum number of UAT messages received by an aircraft will not exceed 400 messages per second with received signal strength greater than -82 dBm.

3.2.2.2.2 TIS-B Service

3.2.2.2.2.1 TIS-B Service Concept of Operations

The TIS-B service provides active ADS-B users with a low-latency stream of position reports of non-ADS-B equipped aircraft. TIS-B service is available in supported Service Volumes when there is both adequate surveillance coverage from non-ADS-B ground sensors and adequate Radio Frequency (RF) coverage from SBS – Ground System radio stations. The high level data flows supporting TIS-B service are illustrated in Figure 3-5 below.

An aircraft or vehicle that is an active ADS-B user and is receiving TIS-B service is known as a TIS-B *Client*. A non-ADS-B equipped aircraft or vehicle that has its position transmitted in TIS-B reports is known as a TIS-B *Target*.

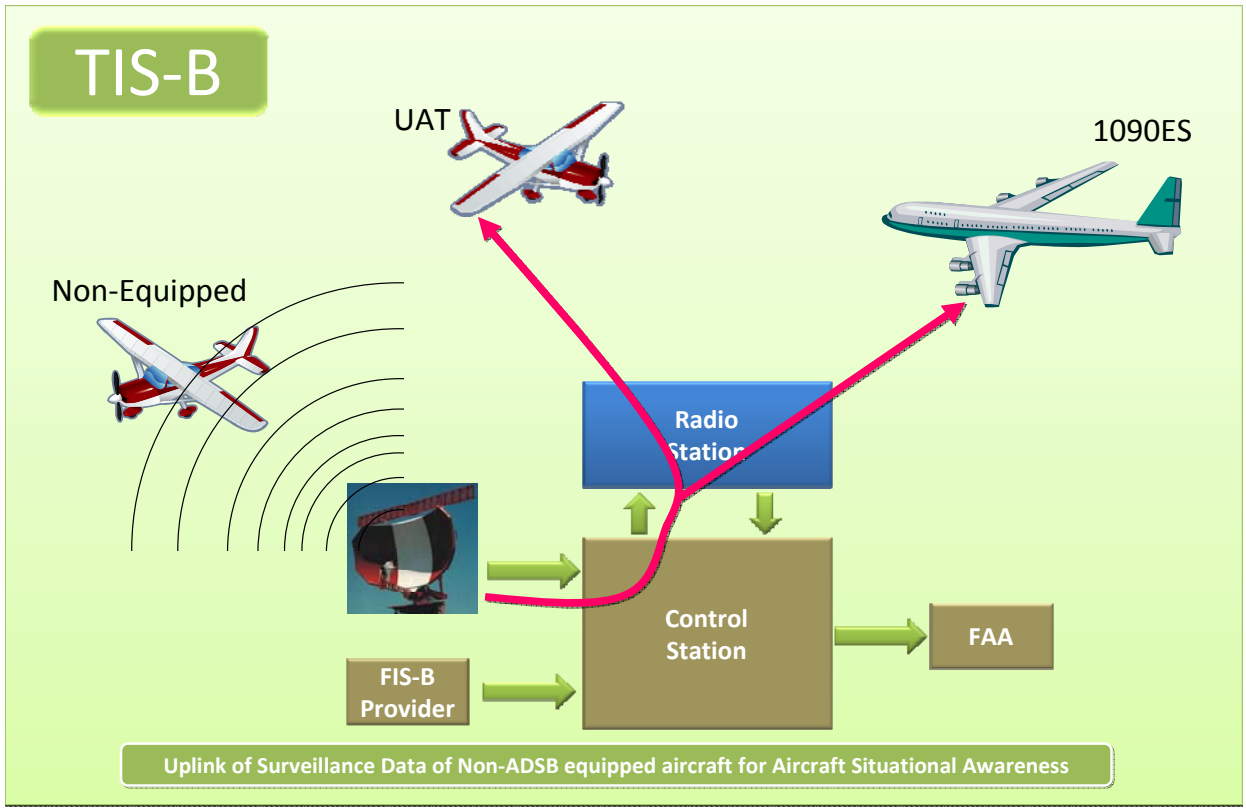

***Figure** Error! No text of specified style in document.-5: TIS-B Service Data Flow*

3.2.2.2.2.2 TIS-B Client Identification

The SBS – Ground System control station monitors the ADS-B received reports to identify TIS-B Client aircraft. In order to be considered a TIS-B Client, an aircraft must be ADS-B-OUT, must have produced valid position data within the last 30s to a SBS ground station, must be under surveillance of at least one secondary radar and must be ADS-B-IN on at least one link. The TIS-B Service Status message is provided to UAT clients to indicate TIS-B service availability; this is considered to be a key safety benefit.

The SBS – Ground System monitors the received ADS-B reports to identify active ADS-B users, and the ADS-B-IN link technologies operating on the aircraft.

Note: With respect to the user aircraft/vehicle (A/V) data links; ADS-B-OUT indicates the A/V can transmit ADS-B messages, ADS-B-IN indicates the A/V can receive service messages such as ADS-R and TIS-B. A dual data link equipped A/V can transmit and receive both 1090ES and UAT services.

TIS-B client identification is provided by the ADS-B Report Generation, Processing, and Distribution function shown in Figure 3-3 Control Segment block and sent to the TIS-B Track Report Processing and Scheduling function (User Status and Validation). The identification information contained in the "User Status and Validation" message includes:

1. A/V ICAO Address
2. Link Technology Indicator

In addition the ADS-B Report Generation, Processing, and Distribution function provides the A/V's:

1. Position data
2. Altitude
3. Validation Status

A/V validation is referring to the capability of the SBS Control Station Segment providing an independent validation of the position information received in the ADS-B Messages. In certain Service Volumes, the FAA will require that the ADS-B Service provide independent validation. The validation capability may assure to a specified probability that each ADS-B Message, and the position information contained within, is from a real aircraft/vehicle with a valid position source rather than from a source broadcasting erroneous information or a spoofer. The validation methods are:

1) Comparison of ADS-B position data to radar position data
2) Comparing a one way "passive range" with range to target indicated by ADS-B position data (available for UAT equipped targets),
3) Use of time difference of arrival techniques.

3.2.2.2.2.3 TIS-B Target Identification

The SBS – Ground System monitors surveillance information from the FAA; the surveillance data is correlated and merged from multiple surveillance sources into individual aircraft tracks. Aircraft tracks that cannot be correlated with an active ADS-B user track are potential TIS-B Targets.

The Multi-Sensor Tracker (MST) function is shown in Figure 3-3. The MST receives FAA sensor data from external sources and ADS-B messages from the ADS-B Report Generation, Processing and Distribution function. The MST establishes tracks from position data received. Track correlations are attempted with each position update of a track. FAA surveillance sensor tracks that cannot be correlated with ADS-B established tracks are candidate TIS-B targets.

Each ATCRBS and Mode S aircraft track identified by the tracker is assigned a unique ID when a 24-Bit address is unavailable for that target. When an ICAO address is available for a Mode S track (typically only in the surface service volumes), then this address is provided in the TIS-B messages. The SBS – Ground System has multiple trackers, deployed regionally such that there is an airborne tracker dedicated to the airspace of each FAA Enroute Center/Terminal Area. There is no correlation of track IDs between trackers, so as a TIS-B Target transitions across Service Volume boundaries between Enroute Centers, its Track ID will change, which may cause duplicate symbols to overlap while the old track ID times out on a CDTI. The avionics may need to be aware of the potential for track ID changes and perform correlation and association processing to associate aircraft across the track ID change in order to minimize duplicate symbols and perception of dropped tracks.

When ADS-R services are not offered in an airspace, the TIS-B service provides Client ADS-B equipped aircraft with proximity targets that are ADS-B equipped on the opposite link technology.

3.2.2.2.2.4 TIS-B in Enroute and Terminal Airspace Domains

The SBS – Ground System examines each potential TIS-B target to determine if it is within proximity of one or more TIS-B clients. In order to become a TIS-B target, a potential target must be contained in a cylinder defined by lateral and vertical distance from Client aircraft. The size of this cylinder depends on the airspace domain of the Client aircraft. TIS-B Service is provided to aircraft operating in the En Route and Terminal Service Volumes. There is a Service Ceiling of 24,000 ft, above which TIS-B clients will not be provided TIS-B service.

In the En Route and Terminal domains, proximity aircraft include all aircraft within a 15 NM radius and +/- 3500 ft of altitude. Aircraft or vehicles determined to be operating on the surface will not be considered valid TIS-B targets for aircraft operating in En Route and Terminal Service Volumes.

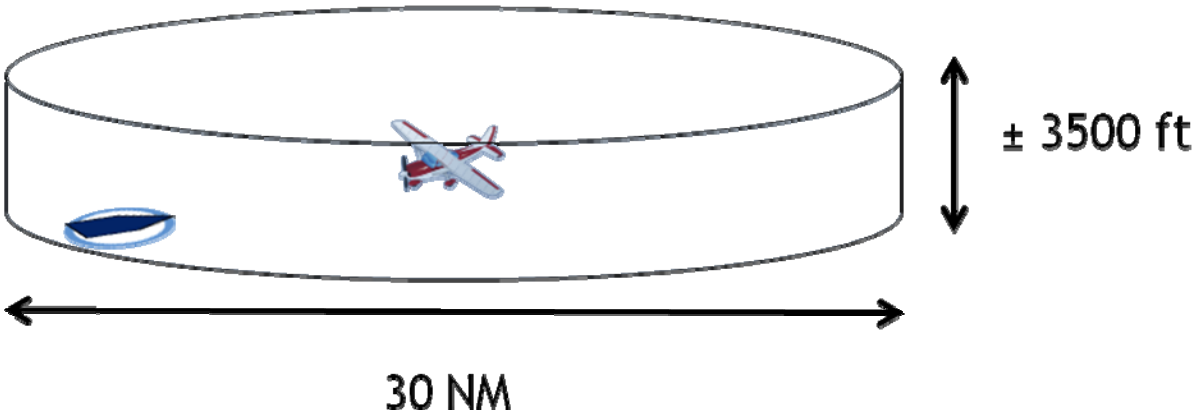

Figure** Error! No text of specified style in document.**-6: TIS-B Client Proximity Determination

3.2.2.2.2.5 TIS-B in Surface Domains

In a surface domain SV, a client is provided all applicable TIS-B targets in SV domain. This includes all targets in the ground state within the movement area as well as airborne targets within 5 NM and 2000 ft AGL of the airport reference point (ARP). Additionally, TIS-B in surface domains covers expanding volumes along the approach and departure corridors.

3.2.2.2.2.6 Transmission of TIS-B Target Messages

The SBS – Ground System transmits TIS-B reports for every TIS-B Target that is in proximity of one or more Clients. An individual Target may be in proximity of multiple Clients, with the potential for the Clients to be in separate airspace domains, with differing update rates. The SBS – Ground System will transmit TIS-B reports for a Target aircraft at the highest rate required by any of the clients of that aircraft. For example, if a Target aircraft has clients in both terminal and en route domains,

TIS-B reports for that Target aircraft will be transmitted at the rate required for the terminal domain.

The cumulative number of messages transmitted by all SBS – Ground System radio stations within reception range of any aircraft in the NAS will not exceed 1,000 1090ES messages per second with received signal strength greater than -78 dBm. This limit applies to both the ADS-R and TIS-B Service combined. The cumulative maximum number of UAT messages received by an aircraft will not exceed 400 messages per second with received signal strength greater than -82 dBm.