Overview of SLAP Simulation Tool and Generation of ASAS Test Inputs

Randy Sleight

APL
The Johns Hopkins University
APPLIED PHYSICS LABORATORY

Outline

- Purpose
- SLAP Design
- ADS-B Tx/Rx
- Radar Model
- ADS-R and TIS-B
- TCAS Model
- Scenario 1a
- Test File Format

Purpose

This brief describes the assumptions and techniques used to generate scenarios to feed into Airborne Separation Assurance Systems, so that realistic, achievable performance levels may be determined for ASSAP processing metrics. These levels of performance feed into the development of requirements for ASSAP processing

SLAP Airborne Functionality

Blue rectangles are "modules" with specific functionality

Arrangement and settings can be customized through xml configuration

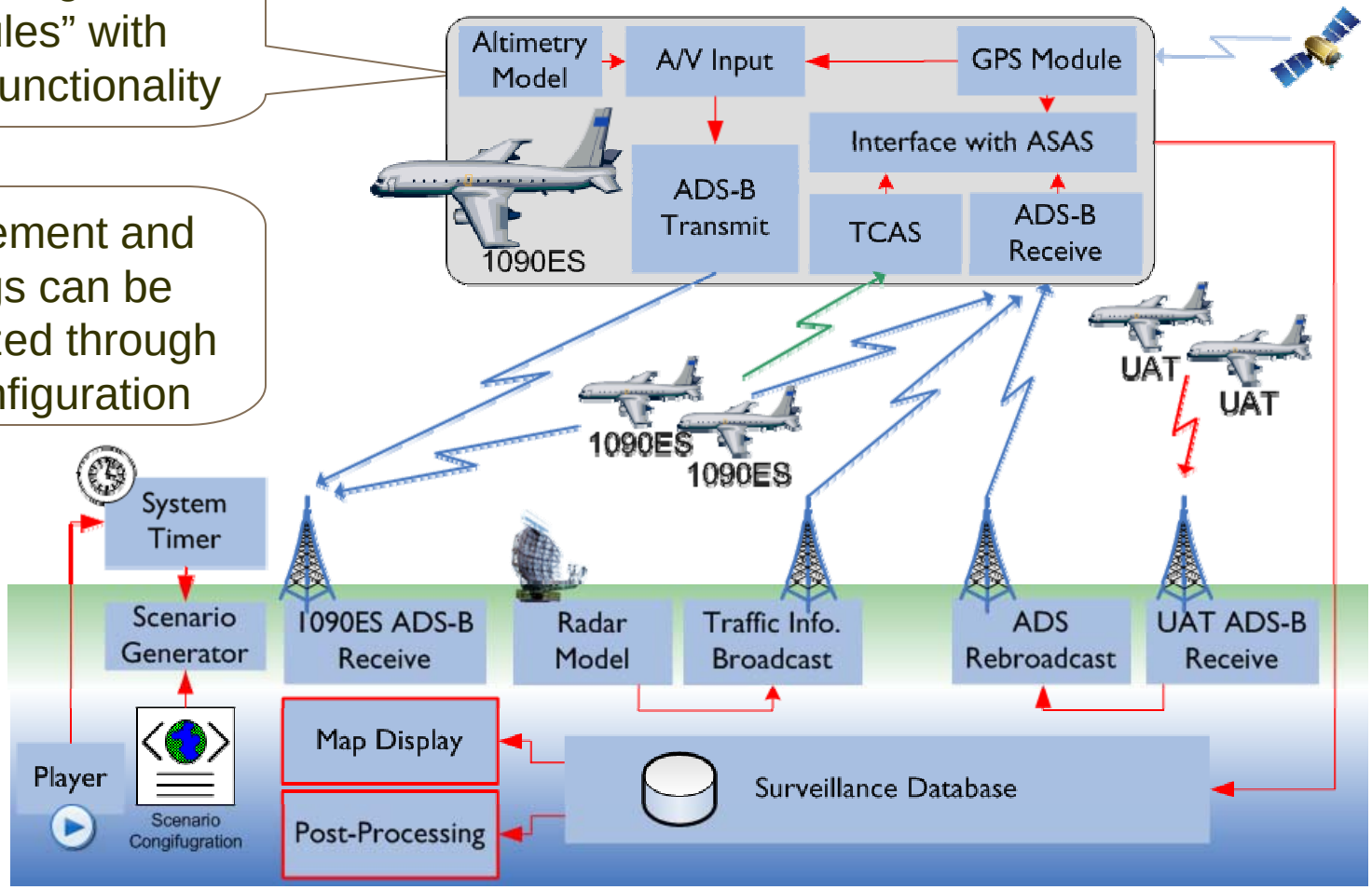

Scenario Generator Module

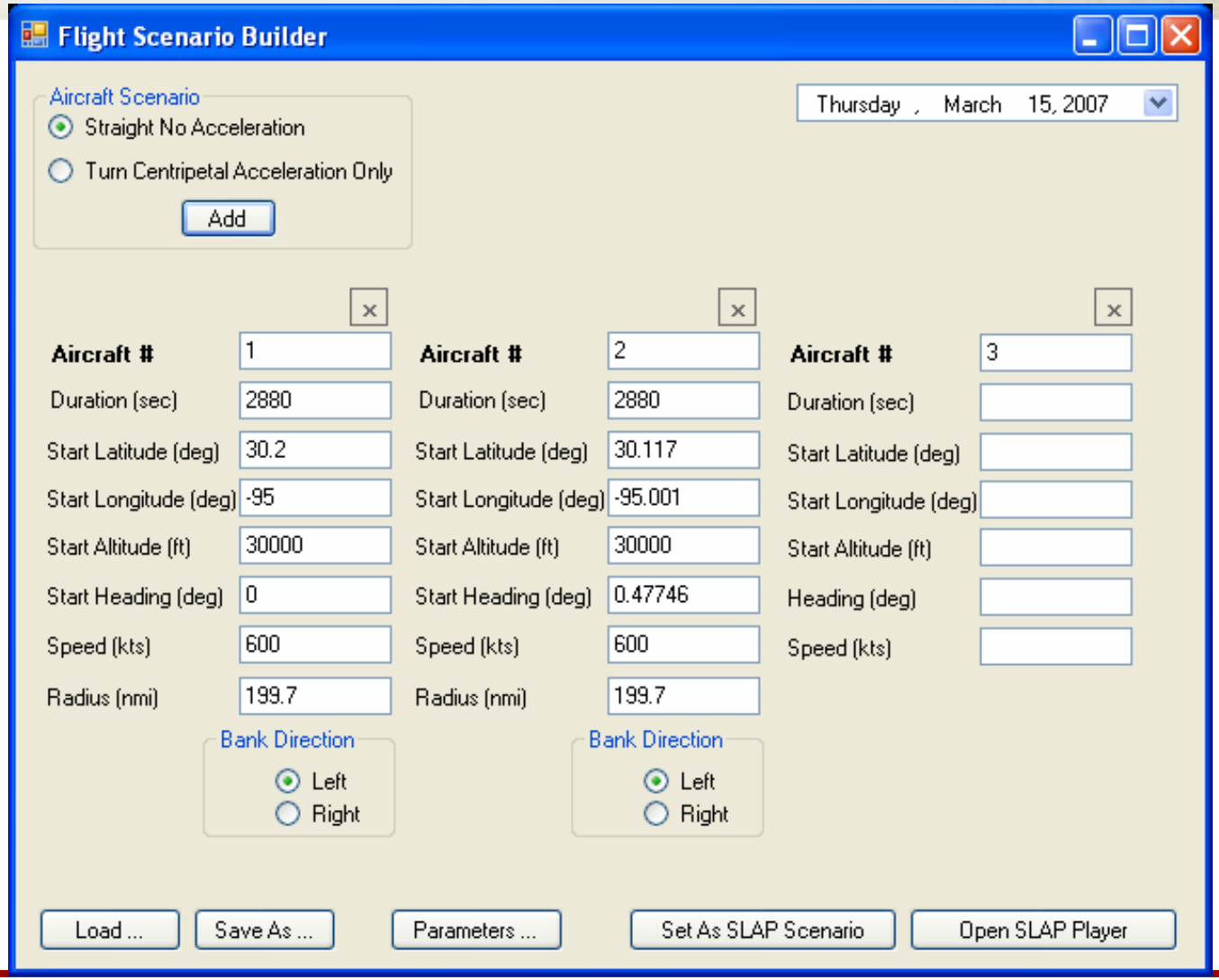

GPS Module

- GPS Error is added to Truth (Scenario) position based on previous position and NACp.
- If 1st track message, error is added based on Gaussian with standard deviation derived from NACp.
- Otherwise, error is added based on a random walk (step = ± 0.1 m, probability = 0.5 each second) from previous.

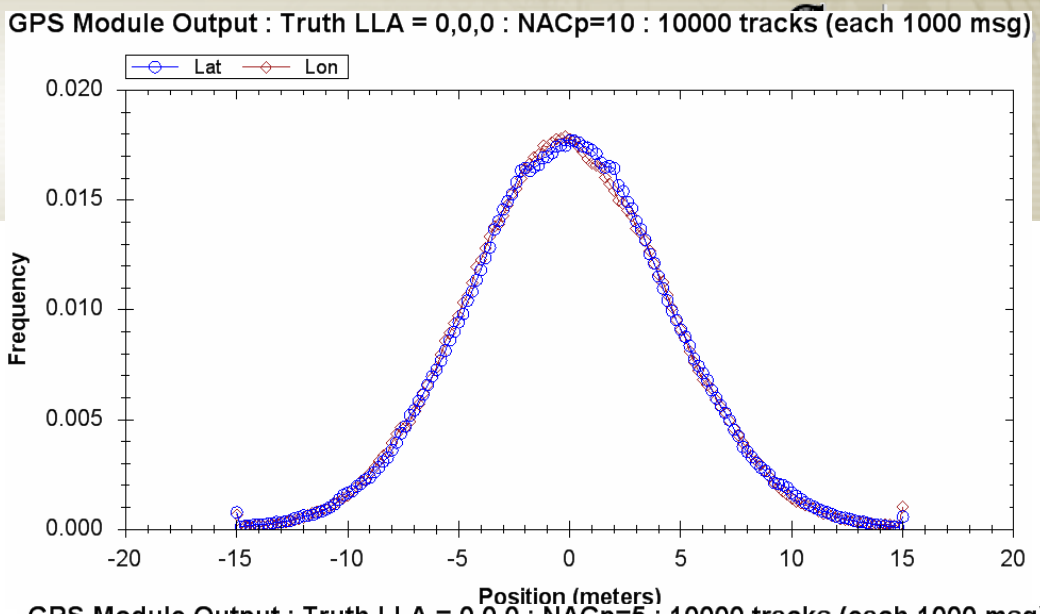

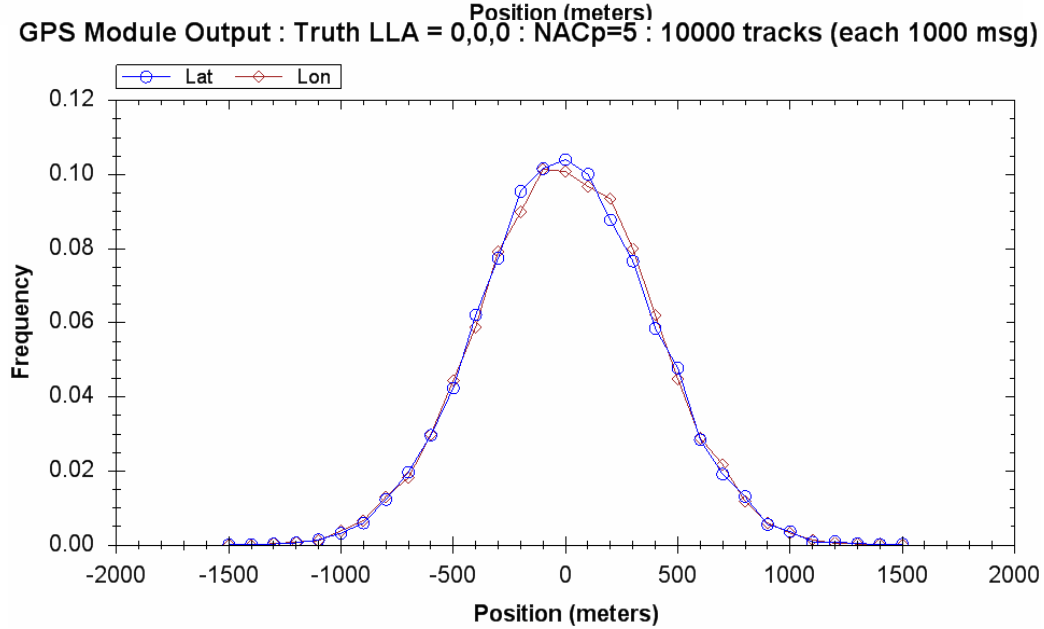

Barometric Altimetry Module

- Error added to the true altitude based on the EUROCONTROL Barometric Altimetry Error Model
- Altitude encoded to 25 or 100 Ft (configurable)

$\mu = 0$

$\lambda = 35$ ft

$$L(\delta) = \frac{1}{2\lambda}\exp\left(\frac{-|\delta - \mu|}{\lambda}\right)$$

ADS-B Tx Module (1090ES)

- Contains “registers” that hold data before transmission
- When a message is scheduled to be transmitted, contents from the registers are inserted into the appropriate message fields.
- A transmitted message is called a squitter
- There are 5 types of squitters:
  1. Airborne Position
  2. Surface Position
  3. Aircraft Identification
  4. Airborne Velocity
  5. Event-driven
- There are a number of event-driven messages. SLAP has implemented two of them:
  - Target State and Status
  - Operational Status

ADS-B Tx Module – Extended Squitters

Ext. Squitter Type	Transmission Frequency (sec)	Relevant Fields
Airborne Position	0.4 – 0.6	position, NIC, Alt
Airborne Velocity	0.4 – 0.6	velocity
Operational Status	2.4 – 2.6 (4.8 – 5.2 ground)	NACp
Target State and Status	1.2 – 1.3	NACp
Aircraft Identification	4.8 – 5.2 (9.8 – 10.2 low)	call sign
Surface Position	0.4 – 0.6 (4.8-5.2 low)	speed, heading, position

Note: the other squitters are not relevant to the simulation

A/V Module

- Loads Registers into Tx Module every 200 ms
- This is not required to be synchronized with 200 ms UTC epoch OR transmission cycles

- Extrapolates GPS SV to next TOA
  - if in precision mode (NIC>=10),
    - extrapolates to next 200 ms UTC epoch
  - if not precision mode
    - extrapolates 100 ms ahead
  - Applies CPR encoding to lat/lon

1090ES Timeline

• **The delay between the GPS time of measurement and the time the position is transmitted can vary greatly**

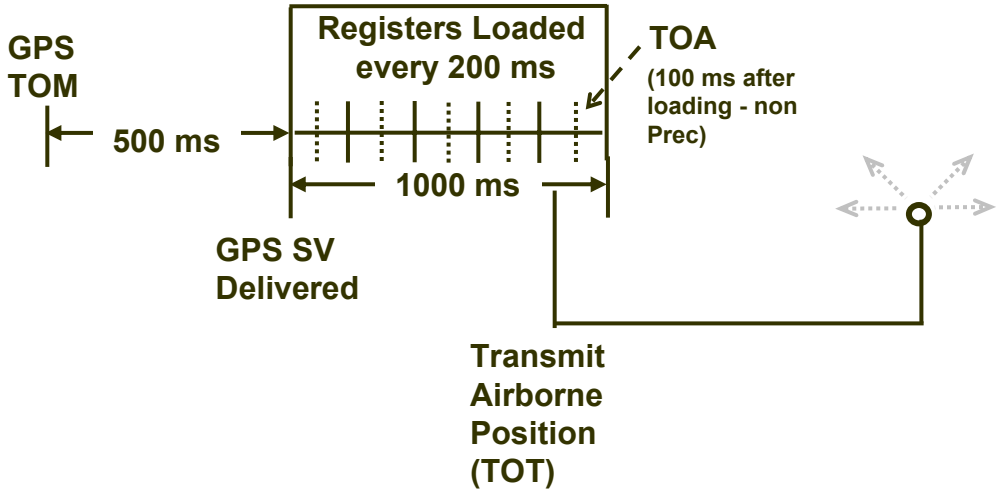

Assumptions:

- 1 Hz GPS updates (causes 1000 ms delay above)
- Registers are loaded when GPS solution is delivered to the ADS-B system. (This is necessary to abide by 1.5 sec max delay reqrmt)
- Max 500ms for GPS SV delivery (see FPR)
- 1.5 seconds maximum delay TOM to TOT

GBT Module

- Can be 1090 or UAT
- Message reception based on **Line of Sight** (LOS) & Message Success Rate (MSR)
- **Configurable MSR** – MSR is set to FPR service performance of 3 sec 95%.
- Line of Sight is 4/3 earth radius, no terrain

ADS-B 1090ES Rx Module

- This is the 1090ES version of the GBT Module
- Receives extended squitters
- Applies Line of Sight filtering
- Applies propagation delay
- Caches various contents of extended squitters
- Generates reports when triggered by airborne position squitter or airborne velocity squitter (in airborne receivers only)
- Critical Spec calls for received position reports every 3sec @ 95% in Terminal and En Route High Update Domain (HU) domains
  - In 3 seconds, there should have been 6 airborne position transmissions. If only one is received, the message reception probability is:

    Pr = 1-(1-CDF)^(1/N) = 1-(1-0.95)^(1/6) = 0.393

MIT Lincoln Lab Radar Error Models

		MSSR LL		ATCRBS "Sliding Window" (SWSSR LL)	
		Short Range	**Long Range**	**Short Range**	**Long Range**
Registration Errors	Location Bias	200 ft. (0.033 nmi.) Uniform in any direction σ = 115 ft. (0.019 nmi.)			
	Azimuth Bias	± 0.3º Uniform[1] σ = 0.173º			
Range Errors	Radar[2] Bias	± 30 ft. (0.005 nmi.) Uniform σ = 17 ft. (0.003 nmi.)		±1/32 nmi. Uniform σ = 164 ft. (0.027 nmi)	
	Radar Jitter	25 feet rms Gaussian σ = 25 ft. (0.004 nmi.)		200 feet rms Gaussian σ = 200 ft. (0.033 nmi.)	
Azimuth Error	Azimuth Jitter	Gaussian σ = 0.068º (0.8 ACP)		Gaussian σ = 0.230º (2.6 ACP)	
Data Dissemination Quantization CD format	Range	1/64 nmi. Uniform σ = 27 ft. (0.005 nmi.)	1/8nmi. Uniform σ = 219 ft. (0.036 nmi.)	1/64 nmi. Uniform σ = 27 ft. (0.005 nmi.)	1/8 nmi. Uniform σ = 219 ft. (0.036 nmi.)
	Azimuth	360º/4096 Uniform σ = 0.025º			

[1] Azimuth bias has been fixed to 1 ACP (0.088°) for ASAS

[2] Mode S Transponder adds +/- 125 feet to range bias

TCAS Module

- Model from Mitre
- Empirical (?)
- Azimuth errors
  - Sum of various jitter quantities
  - Constant bias
- Range errors
  - Jitter
  - Constant bias
- Altitude quantization

- Message Success Rate (MSR)
  - Fixed MSR applied to each aircraft for each 1 hz update
  - Currently = 100%

- Max Range = 60 NM

ADSR Module (1090ES)

- Message scheduling
  - Per ITT PDR
  - To meet Terminal 5 sec 95% update reqrmt., will transmit 5 msgs for each ADS-B update received
  - It is not clear each ADS-B message will be retransmitted when more than 1 message is received in 5 second window
- Latency
  - 1 second Time of Message Reception to Time of Transmission
  - SLAP implements a uniform distribution of 800 to 1000 ms
- Uplink Message Types
  - Airborne Position
  - Surface Position
  - Airborne Velocity
  - Identification
  - Operational Status
  - Target State and Status

TISB Module (1090ES)

- Message scheduling
  - Per ITT PDR
  - To meet Terminal 6 sec 95% update reqrmt., will transmit 6 msgs for each radar update received

- Latency
  - 1.5 second maximum time of radar update arrival to Time of Transmission
  - SLAP implements a uniform distribution of 1300 to 1500 ms

- Uplink Message Types (all DF18)
  - Airborne Position
  - Surface Position
  - TISB Airborne Velocity (this version includes NACp, SIL)
  - Identification

Visualization – Airborne Surveillance

1 - Ownship

2 – Proximate Traffic

TCAS

ADS-B

Traffic Information Service – B (radar broadcast as ADS)

Test Data File Format

- **Comma separated format (*.csv)**
- **Versions for UAT or 1090ES ownship, with or without TCAS**
- **ADS.csv**

FIELD	CONTENT	FORMAT
1	Time of Report	Seconds Since Midnight
2	24-bit address	6 hex digits
3	Target type	Integer, = 0 for ADS-B and 2 for TIS-B
4	Time of applicability	Integer, sec after midnight, LSB = 1/128 sec
5	Latitude	Double, nmi, 8 decimal places (no LSB)
6	Longitude	Double, nmi, 8 decimal places(no LSB)
7	Altitude	Integer, ft, LSB = 1 ft
8	E/W (X) velocity	Float, kt, no LSB
9	N/S (Y) velocity	Float, kt, no LSB
10	Velocity TOA	Integer, sec after midnight, LSB = 1/128 sec
11	NACp	Integer, 0-11
12	NIC	Integer, 0-11
13	NACv	Integer, 0-4
14	SIL	Integer, 0-3
15	Status TOA (NACp,SIL)	Integer, sec after midnight, LSB = 1/128 sec
16	Vertical Rate	Integer, fpm, LSB = 1 ft

- **Ownship.csv** (ADS.csv format + Heading)

17	Heading	Float, deg, no LSB

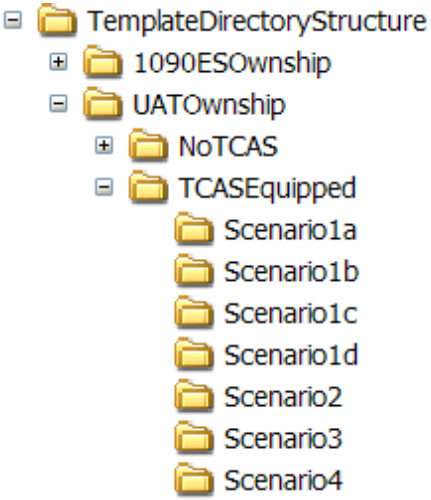

Test Data File Format (cont'd)

- **TCAS.csv**

FIELD	CONTENT	FORMAT
1	Time of report	Float, sec after midnight, 3 decimal places
2	Track number	Integer, unique for each target
3	Range	Float, nmi, 3 decimal places
4	Azimuth	Float, deg, 1 decimal place
5	Altitude	Float, ft, 1 decimal place
6	Mode S address	6 hex digits (all 0's for TIS-B-only targets)
7	Range rate	Float, kt, 1 decimal place
8	Altitude rate	Double, ft/min