RTCA Special Committee 186, Working Group 3
EUROCAE WG-51, SG-1

ADS-B 1090ES MOPS Maintenance

Meeting #27

United Airlines Headquarters, Chicago, Illinois (ORD)
12 – 15 May 2009

Position Extrapolation and Latency Issues
Relevant to RTCA DO-260A/B

Prepared by: Robert H. "Bob" Saffell, Rockwell Collins, Inc.
Reviewed by: Thomas Pagano, and Ian Levitt, FAA, ATO-P

Presented by: Bob Saffell

Summary
Response to Action Item 26-06. This Working Paper addresses issues that were posed during Meeting #26 during discussion of 1090-WP26-29 in regards to latency issues relevant to NON-Precision Position Extrapolation and/or Estimation requirements. In so doing, this document addresses most if not all requirements regarding such Position Extrapolation and/or Estimation requirements and shows that the RTCA DO-260A MOPs are inconsistent with ICAO Doc. 9871 SARPs. Consequently, the issue of latency previously discussed in 1090-WP26-29 needs to be re-addressed in full.

1. Introduction

This document addresses issues that arose in Meeting #26 during discussion of Working Paper 1090-WP26-29 in regards to latency issues relevant to the NON-Precision Position Extrapolation and/or Estimation requirements. This document also addresses the issues that arose during discussion of Working Paper 1090-WP26-10 in regards to condensing requirements and test procedures relevant to both the Precision and NON-Precision Position Extrapolation and/or Estimation requirements. During the discussion of 1090-WP26-10, there were indications that there was little to no difference between the Precision and NON-Precision requirements.

This paper reviews all of the applicable requirements and proves that there is SIGNIFICANT difference between the Precision and the NON-Precision Extrapolation and/or Estimation requirements. Specifically, that the Precision case, with T=1, establishes Time of Applicability such that Time of Applicability is at the EXACT 0.2 UTC EPOCH. The Precision case with T=0 allows estimation techniques that attempt to approach the performance provided by T=1. The NON-Precision case (T=0 only) allows extrapolation or estimation to the Time of Transmission. Furthermore, requirements on the position register are such that the Time of Applicability of position data loaded into the register is never more than 200 milliseconds different from any time at which the register contains the position data. There is a need to consider the difference between the Time of Register Applicability and the Time of Transmission. This is due to the fact that ground systems and airborne TCAS systems can retrieve the position register, requiring that the Time of Applicability of the position data in the register is close to the time the data is retrieved, not the scheduled ADS-B broadcast transmission.

Note: *The use of the term "Time of Applicability" above needs to be qualified according to its use. Using the terminology from WP25-11, when T=1, the Time of Applicability is understood to be measured from the time mark and is equal to* TOA_D*. When T=0, the Time of Applicability is to be understood as measured from* T_C*. That is, without the time mark there is an implicit assumption that* $T_C=TOA_C$*. Put another way, the Time of Applicability of position data loaded in the position register is defined to be* $T_C + \Delta T_{C\rightarrow D}$*.*

This paper goes on to show that the requirements provided in section 2.2 of RTCA DO-260A which allow the NON-Precision method are not provided in Appendix A of RTCA DO-260 and are also NOT provided in ICAO Doc. 9871. As such, the requirements provided in RTCA DO-260A in regards to NON-Precision are NOT Consistent with the ICAO SARPs.

This document also discusses the performance requirements while testing Position Extrapolation or Estimation and justifies the current limits that are shown in section 2.4 of RTCA DO-260A.

This document then addresses latency concerns that were proposed in Working Paper 1090-WP26-29 and ends up recommending a modification against the proposed changes as the changes do not appear to recognize the significant difference between the Precision and NON-Precision method for position extrapolation.

Readers of this document should note that this document is written predominantly in BLUE font. There are multiple areas that are replicated directly from the applicable MOPs or SARPS. Such areas are in BLACK font and are indented both from the left and right margins of the BLUE Text. Areas in the BLACK font are highlighted in yellow to bring attention to crucial areas in the MOPs and SARPs that are in question or are relevant to the topics being discussed in the document.

Finally, for the most part, this document addresses the Position Extrapolation/Estimation issues as they apply to Airborne Position Latitude. It should be recognized that the topics being discussed

and any changes will apply equivalently to Airborne Position Longitude, Surface Position Latitude and Surface Position Longitude.

2. Discussion

2.1 Position Extrapolation Issues

2.1.1. Precision Time Mark Coupled Case Extrapolation

2.1.1.1 RTCA DO-260A Precision Time Mark Coupled Case Requirements

Requirements for extrapolating position for the precision time mark coupled case are replicated from RTCA DO-260A as follows:

"2.2.3.2.3.7.2.1 GPS/GNSS Time Mark Coupled Case (Extrapolation, "Time" (T) = "1")

If "TIME" (T) = 1 (see 2.2.3.2.3.5) in an Airborne Position Message, then the time of applicability of the latitude and longitude fields in that message **shall** be an exact 0.2 second UTC epoch.

a. Specifically, the position data in the latitude and longitude fields **shall** be extrapolated forward from the time of validity of the position fix to the time of applicability of the Airborne Position Message.

b. The Airborne latitude data registers and the encoded latitude subfield **shall** be updated every 200 milliseconds to the next 0.2 UTC Epoch using the velocity data provided for the position fix.

Notes:

1. *The time of validity of the fix is provided with the fix data form the navigation data source and is indicated by the leading edge of the GNSS Time Mark (see section 2.2.5.1.6). The time of applicability of the position message is the exact 0.2 second UTC Epoch to which the position data is extrapolated.*

2. *The latitude position registers and encoded latitude subfield should be updated at a time about 100 milliseconds before the time of applicability of the data being loaded into that register (see section 2.2.5.2.1 and Appendix A, section A.1.4.2.3.1)*

3. *One method of estimating the position to an exact 0.2 second UTC Epoch is described in the following "Commentary."*

COMMENTARY:

The following example provides one method (not the only method!) that latitude given in the Airborne Position Message may be extrapolated from the time of validity of the fix (included with the fix from the navigation data source) to the time of applicability of the Airborne Position Message. In the example, it is assumed that the "TIME" (T) subfield (see section 2.2.3.2.3.5) is "ONE," indicating that the time of applicability of the extrapolated position is an exact 0.2 second UTC Epoch.

Let:

t_{fix} = *time of the leading edge of the last received GNSS Time Mark (see section 2.2.5.1.6), which is also the time of validity included with the fix from the navigation data source.*

$t_{message}$ = *time of applicability of the Airborne Position Message, which is an exact 0.2 second UTC Epoch.*

Δt = $t_{message} - t_{fix}$, *in milliseconds*

Φfix = *last known latitude position, at time* t_{fix}, *in degrees*

$\Phi message$ = *latitude, extrapolated forward to the time of applicability of the airborne position message,* $t_{message}$

$\Delta\phi$ = $\phi_{message} - \phi_{fix}$, *in degrees*

v_{NS} = *North / South Velocity*

The earth may be modeled as a sphere with radius such that one nautical mile equals one minute of arc along a great circle. Using that approximation, yields:

$$\phi_{message} = \phi_{fix} + \Delta_{\phi}$$

$$= \phi_{fix} + (v_{NS}/60)(\Delta t/3600000)$$

$$= \phi_{fix} + (v_{NS}\,\Delta t) / (2.16 \times 108)$$

(We divide v_{NS} *by 60 to convert from knots in the N-S direction to degrees of latitude per hour, and divide* Δt *by 3600 x 1000 to convert from milliseconds to hours.)*

The result, $\phi_{message}$, *is to be encoded in the latitude field of the Airborne Position Message using the CPR algorithm described in Appendix A, section A.1.7."*

2.1.1.2 RTCA DO-260A Appendix A Precision Time Mark Coupled Case Requirements

Requirements for extrapolating position for the precision time mark coupled case are replicated from RTCA DO-260A Appendix A as follows:

A.1.4.2.3 Latitude / Longitude

The Latitude/Longitude field in the airborne position message will be a 34-bit field (ME bits 23 – 56, Message bits 55 – 88) containing the Latitude and Longitude of the Aircraft Airborne Position. The Latitude and Longitude will each occupy 17 bits. The Airborne Latitude and Longitude will contain Airborne CPR-encoded values in accordance with section A.1.7. The unambiguous range for the local decoding of Airborne Messages will be 666 km (360 NM). The positional accuracy maintained by the Airborne CPR encoding will be approximately 5.1 meters.

Notes:

1. *The latitude/longitude encoding is also a function of the CPR format value (the "F" bit) described above.*

2. *Although the positional accuracy of the airborne CPR encoding is approximately 5.1 meters in most cases, implementers should be aware that the longitude position accuracy may only be approximately 10.0 meters when the latitude is either –87.0 ±1.0 degrees, or +87 ±1.0 degrees.*

A.1.4.2.3.1 Extrapolating position (when T = 1)

If T is set to one, Airborne Position Messages with format TYPE Codes 9, 10, 20 and 21 shall have Times of Applicability that are exact 0.2s UTC epochs. In that case, the F bit will be ZERO (0) if the Time of Applicability is an even-numbered 0.2s UTC epoch, or ONE (1) if the Time of Applicability is an odd-numbered 0.2s UTC epoch.

Note 1: *Here, an "even-numbered 0.2s epoch" means an epoch which occurs an even number of 200-ms time intervals after an even-numbered UTC second. An "odd-numbered 0.2s epoch" means an epoch which occurs an odd number of 200-ms time intervals after an even-numbered UTC second. Examples of even-numbered 0.2s UTC epochs are 12.0s, 12.4s, 12.8s, 13.2s, 13.6s, etc. Examples of odd-numbered UTC epochs are 12.2s, 12.6s, 13.0s,13.4s, 13.8s, etc.*

The CPR-encoded Latitude and Longitude that are loaded into the Airborne Position register will comprise an estimate of the A/V position at the Time of Applicability of that Latitude and Longitude, which is an exact 0.2s UTC epoch. The register shall be loaded no earlier than 150 ms before the Time of Applicability of the data being loaded, and no later than 50 ms before the Time of Applicability of that data.

This timing ensures that the ADS-B Receiving Subsystem may easily recover the Time of Applicability of the data in the Airborne Position Message, as follows:

- If F = 0, the Time of Applicability shall be the nearest even-numbered 0.2s UTC epoch to the time that the Airborne Position Message is received.

- If F = 1, the Time of Applicability shall be the nearest odd-numbered 0.2s UTC epoch to the Time that the Airborne Position Message is received.

Note 2: *If the airborne position register is loaded every 200 ms, the ideal time to load that register would be 100 ms before the Time of Applicability of the data being loaded. The register would then be re-loaded, with data applicable at the next subsequent 0.2 second epoch. That way, the time of transmission of an Airborne Position message would never differ by more than 100 ms from the Time of Applicability of the data in that message. By specifying "100ms +/- 50 ms" rather than 100 ms exactly, some tolerance is allowed for variations in implementation.*

The position data that is loaded into the Airborne Position register will be an estimate of the A/V position at the Time of Applicability.

Note 3: *The position may be estimated by extrapolating the position from the time of validity of the fix (included in the position fix) to the Time of Applicability of the data in the register (which, if T=1, is an exact 0.2 UTC time tick). This may be done by a simple linear extrapolation using the velocity provided with the position fix and the time difference between the position fix validity time and the Time of Applicability of the transmitted data. Alternatively, other methods of estimating the position such as alpha-beta trackers or Kalman filters, may be used.*

Every 200 ms, the contents of the position registers will be updated by estimating the A/V position at the next subsequent 0.2 second UTC epoch. This process will continue with new position fixes as they become available from the source of navigation data."

2.1.1.3 ICAO Doc. 9871 Precision Time Mark Coupled Case Requirements

Requirements for extrapolating position for the precision time mark coupled case are replicated from ICAO Doc. 9871 as follows:

A.2.3.2.3 LATITUDE/LONGITUDE

The latitude/longitude field in the airborne position message shall be a 34-bit field containing the latitude and longitude of the aircraft airborne position. The latitude and longitude shall each occupy 17 bits. The airborne latitude and longitude encodings shall contain the 17 bits of the CPR-encoded values defined in §A.2.6.

Note 1.— The unambiguous range for the local decoding of airborne messages is 666 km (360 NM). The positional accuracy maintained by the airborne CPR encoding is approximately 5.1 metres. The latitude/longitude encoding is also a function of the CPR format value (the "F" bit) described above.

Note 2.— Although the positional accuracy of the airborne CPR encoding is approximately 5.1 metres in most cases, the longitude position accuracy may

only be approximately 10.0 metres when the latitude is either –87.0 ±1.0 degrees, or +87 ±1.0 degrees.

A.2.3.2.3.1 Extrapolating position (when T = 1)

If T is set to one, airborne position messages with format TYPE Codes 9, 10, 20 and 21 shall have times of applicability which are exact 0.2s UTC epochs. In that case, the F bit shall be 0 if the time of applicability is an even-numbered 0.2s UTC epoch, or 1 if the time of applicability is an odd-numbered 0.2s UTC epoch.

Note.— In such a case, an "even-numbered 0.2s epoch" means an epoch which occurs an even number of 200-ms time intervals after an even-numbered UTC second. An "odd-numbered 0.2s epoch" means an epoch which occurs an odd number of 200-ms time intervals after an even-numbered UTC second. Examples of even-numbered 0.2s UTC epochs are 12.0s, 12.4s, 12.8s, 13.2s, 13.6s, etc. Examples of odd-numbered UTC epochs are 12.2s, 12.6s, 13.0s,13.4s, 13.8s, etc.

The CPR-encoded latitude and longitude that are loaded into the airborne position register shall comprise an estimate of the aircraft/vehicle (A/V) position at the time of applicability of that latitude and longitude, which is an exact 0.2s UTC epoch. The register shall be loaded no earlier than 150 ms before the time of applicability of the data being loaded, and no later than 50 ms before the time of applicability of that data.

This timing shall ensure that the receiving ADS-B system may recover the time of applicability of the data in the airborne position message, as follows:

1) If F = 0, the time of applicability shall be the nearest even-numbered 0.2s UTC epoch to the time that the airborne position message is received.

2) If F = 1, the time of applicability shall be the nearest odd-numbered 0.2s UTC epoch to the time that the airborne position message is received.

Recommendation.— *If the airborne position register is updated at its minimum (every 200 ms), that register should be loaded 100 ms before the time of applicability. The register should then be reloaded, with data applicable at the next subsequent 0.2s UTC epoch, 100 ms before that next subsequent 0.2s epoch.*

Note 1.— In this way, the time of transmission of an airborne position message would never differ by more than 100 ms from the time of applicability of the data in that message. By specifying "100 ms ± 50 ms" rather than 100 ms exactly, some tolerance is allowed for variations in implementation.

Note 2.— The position may be estimated by extrapolating the position from the time of validity of the fix (included in the position fix) to the time of applicability of the data in the register (which, if T = 1, is an exact 0.2s UTC time tick). This may be done by a simple linear extrapolation using the velocity provided with the position fix and the time difference between the position fix validity time and the time of applicability of the transmitted data. Alternatively, other methods of estimating the position, such as alpha-beta trackers or Kalman filters, may be used.

Every 200 ms, the contents of the position registers shall be updated by estimating the A/V position at the next subsequent 0.2s UTC epoch. This process shall continue with new position fixes as they become available from the source of navigation data."

2.1.1.4 Review / Comparison of Precision Time Mark Coupled Case Requirements

2.1.1.4.1 General Requirements Review

Review of the requirements provided in sections 2.1.1.1 –through- 2.1.1.3 of this document indicates that there is fundamental agreement between the requirements given in section 2.2 of RTCA DO-260A, Appendix A of RTCA DO-260A, and ICAO Doc. 9871.

Specifically, position must be extrapolated forward to the next EXACT 0.2 second EPOCH and that the Airborne Position Register must be updated between 50 and 150 milliseconds prior to the time of applicability which is at the next EXACT 0.2 second EPOCH.

Especially note that the time of applicability is NOT the Time of Next Scheduled Transmission.

Note also that extrapolating to the 0.2 second epoch establishes that $TOA_D \approx TTOA$, i.e. there is essentially no uncompensated latency for T=1.

2.1.1.4.2 Possible Improvements

One point in improving the MOPs arises from the Commentaries where the conversion factor from nautical miles per hour to degrees per millisecond is inferred as follows:

NS_velocity*60/3600000 = NS_velocity*(4.62962963 * 10^{-9}) =➔ latitude degrees / millisecond

This formulation is based on the ancient sailors' method where one nautical mile approximates one minute of arc or placed another way as one degree is roughly 60 nautical miles. When this "rule of thumb" was established, there was little accepted knowledge of the mean radius of the earth.

As one degree at the equator is actually 59.661 nautical miles, a better approximation would be to convert the tangential North-South velocity to angular or radial velocity as follows:

Let:mean radius of earth = 3444.069252 nautical miles

Then:

NS_velocity * (1/3444.069252) * (1/3600) * (360) *(1/2π) (1/1000)

= NS_velocity * (4.621130745 * 10-9) =➔ latitude degrees / millisecond

2.1.1.5 Time Tag Coupled Precision Extrapolation Implementation

Figure 1 illustrates the extrapolation update flow necessary to meet the requirements as provided in section 2.1.1.1 –through- 2.1.1.3 of this document.

In review of **Figure 1**, note that the position is always extrapolated to the next EXACT 0.2 second EPOCH. That means that the data loaded into the Airborne Position Message register (BDS 0,5) is always applicable at the next EXACT 0.2 second EPOCH. Similarly, the register (BDS 0,5) must be updated every 0.2 seconds.

Also, notice that the figure illustrates the proper ODD / EVEN encoding distribution starting with EVEN at the beginning of the EVEN EPOCH.

2.1.1.6 Test Procedures for Time Tag Coupled Precision Extrapolation

Test procedures to validate the precision extrapolation requirements of section 2.1.1.1 –through- 2.1.1.3 of this document are provided in RTCA DO-260A, section 2.4.3.2.3.7.2.1. Note that the procedures provide a **very precise stimulus** and expect a **very precise response** from the ADS-D transmitting subsystem. The procedures are intended to validate that the extrapolations are being done correctly to the Next **EXACT** 0.2 UTC Epoch while maintaining the expected accuracy of the CPR encoding algorithm. As noted in sections 2.1.1.2 and 2.1.1.3 of this document, the expected accuracy is **5.1** meters. Consequently, the test procedures establish a steady state error bound of precisely **6.375** meters. The **6.375** meters was established during RTCA DO-260 development and is equivalent to **(1.25) (5.1)**. Effectively, the error bound adds **25%** to the **5.1** meter accuracy resolution requirement.

During discussions during meeting #26 of SC-186 WG-3 / Eurocae WG-51, SG-1, in Washington, D.C., various vendors indicated that the accuracy requirement of **6.375** meters was impossible to obtain. Some of the vendors requested that an additional **+/- 15 millisecond** bound be established about the EXACT 0.2 UTC Epoch. **Table 1** is provided below and contains actual data and results for Case #7 of the test procedure provided in RTCA DO-260A, section 2.4.3.2.3.7.2.1. Inspection of the data indicates that the maximum error sustained was **14.2187** feet or **0.00003922** degrees at the Latitude of **89.96955216** degrees (see Table 1, Item 12). As such, **Table 1** conclusively indicates that the accuracy limits of the test procedure can be obtained.

Note: As an aside, this document addresses only the Airborne Position Message and Latitude Position. Therefore, the limits of **5.1** meters and **6.375** meters given above apply only to the Airborne Position Messages. Similar limits are given for the Surface Position Limits in RTCA DO-260A, Appendix A, Section A.1.4.3.5 and ICAO Doc. 9871, Section A.2.3.3.5. Both documents establish the expected CPR encoding accuracy for Surface Position at approximately **1.25** meters with a worse case of approximately **3.0** meters at latitudes of 87 +/- 1.0 degrees from the equator.

Based on the above, the limits were established in RTCA DO-260 MOPs test procedures at **3.0** meters for Surface Position accuracy. Most likely, this limit came from taking **2** times the **1.25** value and adding a **20%** bound, e.g., **(1.25)*(2)*(1.20) = 3.0**. Alternatively, the limit may have just been set at **3.0** as it was the expected worse case approximate maximum error.

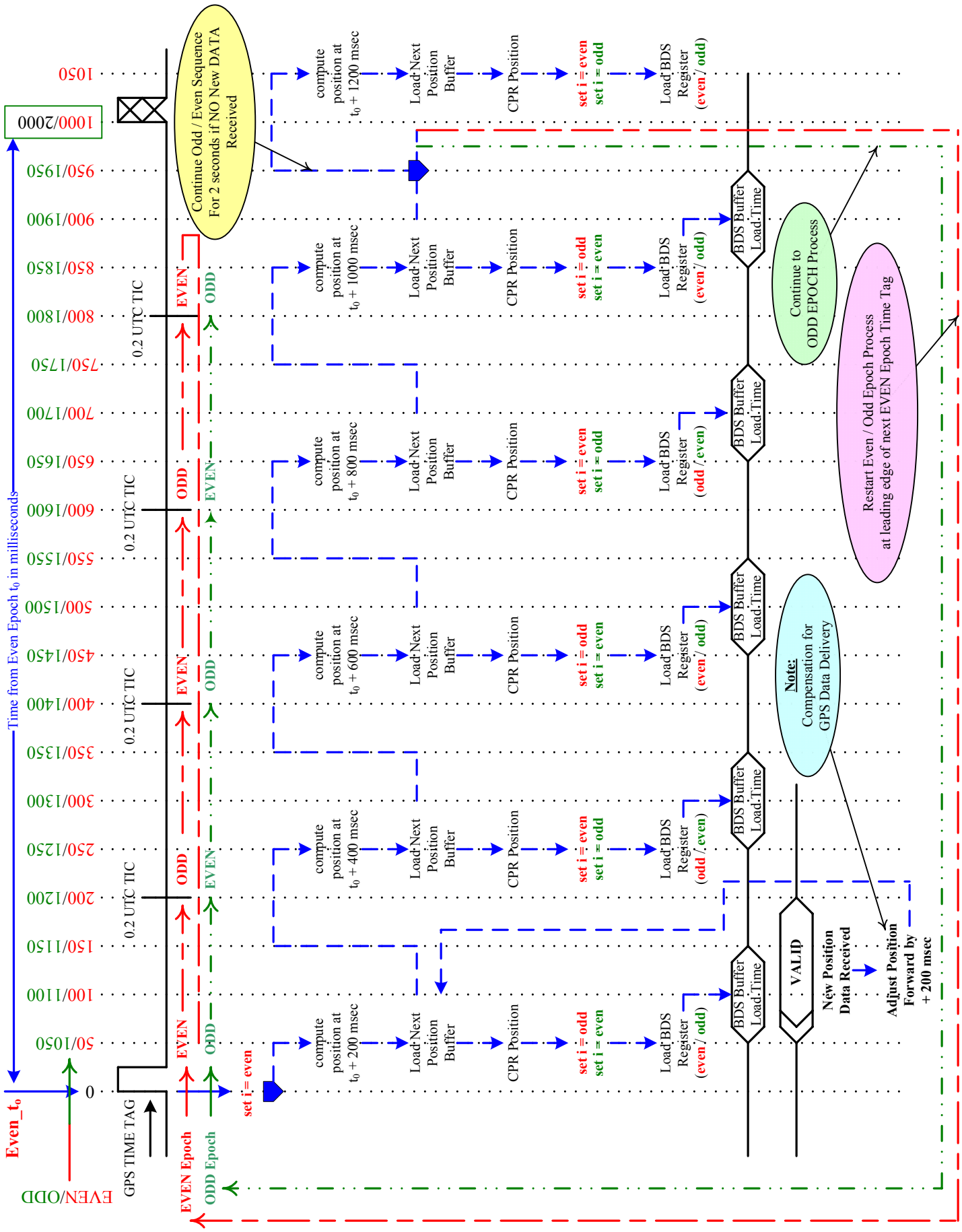

Figure_1: Precision Extrapolation with GPS Time Tag Coupled

Table 1. TDR-94/94D Position Extrapolation Validation

RTCA DO-260A section 2.4.3.2.3.7.2.1 Step 7__Time Tag Couppled

Starting Latitude Position (degrees)	**89.93750000**
Starting Velocity_North (knots)	**1020.00**
Mean Radius of Earth (nautical miles)	3444.069252
Starting Velocity_North (degrees/second)	0.004713553360156
Nautical Miles Per Degree	59.661
Feet Per Nautical Mile	6076.1
Max Allowable Steady State Error (meters)	**6.375**
Max Allowable Steady State Error (feet)	**20.91535436**

Input data is provided to the transponder in accordance with ARINC-743A at a once per second rate and with the data being provided within 200 milliseconds of the leading edge of the GPS Time Mark.

North Pole Crossing with Time Tag - GPS				Best Time of Applicability (0.2 time tic)	EXACT Computed Latitude at Time of Applicability	Latitude error_degrees	Latitude error_feet
Item #	Latitude	Longitude	Squitter Transmit Time				
1	89.94406128	45.00000000	1.36894522	1.40000000	89.94409897	0.00003770	13.66481782
2	89.94598389	45.00000000	1.81701780	1.80000000	89.94598440	0.00000051	0.18464191
3	89.94786149	45.00000000	2.24907971	2.20000000	89.94786982	0.00000832	3.01742635
4	89.95069885	45.00000000	2.78515768	2.80000000	89.95069795	-0.00000090	-0.32737629
5	89.95349121	45.00000000	3.36126044	3.40000000	89.95352608	0.00003487	12.64078141
6	89.95633400	45.00000000	3.96136970	4.00000000	89.95635421	0.00002021	7.32717133
7	89.95917369	45.00000000	4.53746358	4.60000000	89.95918235	0.00000866	3.13859926
8	89.96103578	45.00000000	4.98554004	5.00000000	89.96106777	0.00003199	11.59653744
9	89.96292114	45.00000000	5.40161018	5.40000000	89.96295319	0.00003205	11.61670875
10	89.96484375	45.00000000	5.90569107	5.80000000	89.96483861	-0.00000514	-1.86346715
11	89.96763611	45.00000000	6.39377319	6.40000000	89.96766674	0.00003063	11.10469055
12	89.96951294	45.00000000	6.82584810	6.80000000	89.96955216	0.00003922	14.21870730
13	89.97235107	45.00000000	7.32993537	7.40000000	89.97238029	0.00002922	10.59267234
14	89.97422791	45.00000000	7.89803242	7.80000000	89.97426572	0.00003781	13.70668910
15	89.97706604	45.00000000	8.46612410	8.40000000	89.97709385	0.00002781	10.08065414
16	89.97988943	45.00000000	8.94620400	9.00000000	89.97992198	0.00003255	11.79846812
17	89.98178101	45.00000000	9.48229710	9.40000000	89.98180740	0.00002640	9.56859969
18	89.98463776	45.00000000	10.01038411	10.00000000	89.98463553	-0.00000223	-0.80762700
19	89.98649597	45.00000000	10.45045460	10.40000000	89.98652095	0.00002498	9.05658149
20	89.98933954	45.00000000	11.00254211	11.00000000	89.98934909	0.00000955	3.46173910
21	89.99121094	45.00000000	11.41061190	11.40000000	89.99123451	0.00002357	8.54456328
22	89.99308777	45.00000000	11.89068856	11.80000000	89.99311993	0.00003216	11.65858003
23	89.99592590	45.00000000	12.37876805	12.40000000	89.99594806	0.00002216	8.03254508
24	89.99780273	45.00000000	12.78683172	12.80000000	89.99783348	0.00003075	11.14656183
25	89.99972069	45.00000000	13.22690034	13.20000000	89.99971890	-0.00000178	-0.64607521
26	89.99837067	-135.00000000	13.69897716	13.60000000	89.99839567	0.00002500	9.06359825
27	89.99553099	-135.00000000	14.29908342	14.20000000	89.99556754	0.00003656	13.25217033
28	89.99272156	-135.00000000	14.75515008	14.80000000	89.99273941	0.00001785	6.47170349
29	89.99082921	-135.00000000	15.29924426	15.20000000	89.99085399	0.00002478	8.98284048
30	89.98800659	-135.00000000	15.81932669	15.80000000	89.98802586	0.00001927	6.98372169
31	89.98612743	-135.00000000	16.24340477	16.20000000	89.98614044	0.00001300	4.71347438
32	89.98329163	-135.00000000	16.77149493	16.80000000	89.98331230	0.00002068	7.49573990
33	89.98045349	-135.00000000	17.34758656	17.40000000	89.98048417	0.00003068	11.12181110
34	89.97857666	-135.00000000	17.90767578	17.80000000	89.97859875	0.00002209	8.00775810
35	89.97573853	-135.00000000	18.49978108	18.40000000	89.97577062	0.00003209	11.63382930
36	89.97290660	-135.00000000	19.07587646	19.00000000	89.97294249	0.00003589	13.00982451
37	89.97011346	-135.00000000	19.60396459	19.60000000	89.97011435	0.00000089	0.32293537
38	89.96820482	-135.00000000	20.09204871	20.00000000	89.96822893	0.00002411	8.74045841
39	89.96536514	-135.00000000	20.64414547	20.60000000	89.96540080	0.00003567	12.92903049
40	89.96350305	-135.00000000	21.06021823	21.00000000	89.96351538	0.00001233	4.47109231
41	89.96066336	-135.00000000	21.62031509	21.60000000	89.96068725	0.00002389	8.65970064
42	89.95782367	-135.00000000	22.21240877	22.20000000	89.95785912	0.00003544	12.84827272
43	89.95596158	-135.00000000	22.72450426	22.60000000	89.95597369	0.00001211	4.39033454
44	89.95312190	-135.00000000	23.25258752	23.20000000	89.95314556	0.00002367	8.57890662
45	89.95028687	-135.00000000	23.82868891	23.80000000	89.95031743	0.00003056	11.07993982
46	89.94749451	-135.00000000	24.40477855	24.40000000	89.94748930	-0.00000521	-1.88821788
47	89.94557190	-135.00000000	24.81284635	24.80000000	89.94560388	0.00003198	11.59195803
48	89.94277954	-135.00000000	25.34893247	25.40000000	89.94277574	-0.00000380	-1.37619967
49	89.94085693	-135.00000000	25.80500877	25.80000000	89.94089032	0.00003339	12.10397623
50	89.93897002	-135.00000000	26.30910067	26.20000000	89.93900490	0.00003489	12.64630579
51	89.93614197	-135.00000000	26.83719719	26.80000000	89.93617677	0.00003480	12.61599444
52	89.93334961	-135.00000000	27.34127683	27.40000000	89.93334864	-0.00000097	-0.35216327
53	89.93142700	-135.00000000	27.84535711	27.80000000	89.93146322	0.00003621	13.12801264
54	89.92863464	-135.00000000	28.43746003	28.40000000	89.92863508	0.00000044	0.15985493
55	89.92671204	-135.00000000	28.86953982	28.80000000	89.92674966	0.00003763	13.64006709
56	89.92391968	-135.00000000	29.42963617	29.40000000	89.92392153	0.00000185	0.67190939
57	89.92109396	-135.00000000	29.97372898	30.00000000	89.92109340	-0.00000056	-0.20217140
58	89.91920471	-135.00000000	30.41379986	30.40000000	89.91920798	0.00000327	1.18392759
59	89.91732788	-135.00000000	30.82186740	30.80000000	89.91732256	-0.00000532	-1.93012541
60	89.91448975	-135.00000000	31.34995618	31.40000000	89.91449442	0.00000468	1.69594579
61	89.91261292	-135.00000000	31.90204494	31.80000000	89.91260900	-0.00000391	-1.41807095
62	89.90977478	-135.00000000	32.40612784	32.40000000	89.90978087	0.00000609	2.20796400
63	89.90694208	-135.00000000	32.99022955	33.00000000	89.90695274	0.00001066	3.86522776
64	89.90410239	-135.00000000	33.58232897	33.60000000	89.90412461	0.00002222	8.05379985
65	89.90126270	-135.00000000	34.13441349	34.20000000	89.90129648	0.00003377	12.24237192
66	89.89940061	-135.00000000	34.64649746	34.60000000	89.89941105	0.00001044	3.78443375

2.1.2. Precision NON-Time Mark Coupled Case Extrapolation

2.1.2.1 RTCA DO-260A Precision NON-Time Mark Coupled Case Requirements

Requirements for extrapolating position for the precision NON-time mark coupled case are replicated from RTCA DO-260A as follows:

"2.2.3.2.3.7.2.2 Non-Coupled Case (Estimation, "TIME" (T) = "0")

ADS-B Airborne Position Messages with TYPE Codes of 9, 10, 20 and 21 (see section 2.2.3.2.3.1) may implement estimation techniques such as alpha-beta trackers or Kalman filters to satisfy the intent of the position update requirements given in section 2.2.3.2.3.7.2.1. Such techniques provide the capability to decouple the position computation from the message transmission timing provided that the sampled data rate is sufficient to satisfy minimum Nyquist criterion. Likewise such techniques may be necessary in order to provide velocity compensation and/or acceleration estimation in the future.

a. If sampled data estimation techniques, e.g., alpha-beta trackers, alpha-beta-gamma trackers, or Kalman filters, are used to periodically update position data, then the maximum sampled data time **shall** not exceed 100 milliseconds.

b. Sampled data implementations **shall** update the airborne latitude data registers and encoded latitude data subfield at intervals not to exceed **100 milliseconds**

Note: *The 100 millisecond requirement is necessary in order to insure that the 200 millisecond performance required in section 2.2.3.2.3.7.2.1 is not degraded."*

2.1.2.2 RTCA DO-260A Appendix A Precision NON-Time Mark Coupled Case Requirements

Requirements for extrapolating position for the precision NON-time mark coupled case are replicated from RTCA DO-260A Appendix A as follows:

A.2.3.2.3.2 Extrapolating position (when T = 0)

T will be set to ZERO (0) if the Time of Applicability of the data being loaded into the position register is not synchronized to any particular UTC epoch. In that case, the position register shall be reloaded with position data at intervals that are no more than 200 ms apart. The position being loaded into the register shall have a time of applicability that is never more than 200 ms different from any time during which the register holds that data.

Note: *This may be accomplished by loading the Airborne Position register at intervals that are, on average, no more than 200 ms apart, with data for which the Time of Applicability is*

between the time the register is loaded and the time that it is loaded again. (Shorter intervals than 200 ms are permitted, but not required.)

If T = ZERO (0), then ADS-B Receiving Subsystems will accept Airborne Position Messages as being current as of the Time of Receipt. The ADS-B Transmitting Subsystem will re-load the Airborne Position register with updated estimates of the A/V position, at intervals that are no more than 200 ms apart. The process will continue with new position reports as they become available.

2.1.2.3 ICAO Doc. 9871 Precision NON-Time Mark Coupled Case Requirements

Requirements for extrapolating position for the NON-precision time mark coupled case are replicated from ICAO Doc. 9871 as follows:

A.2.3.2.3.2 Extrapolating position (when T = 0)

T shall be set to zero if the time of applicability of the data being loaded into the position register is not synchronized to any particular UTC epoch. In that case, the position register shall be reloaded with position data at intervals that are no more than 200 ms apart. The position being loaded into the register shall have a time of applicability that is never more than 200 ms different from any time during which the register holds that data.

Note: *This may be accomplished by loading the airborne position register at intervals that are, on average, no more than 200 ms apart, with data for which the time of applicability is between the time the register is loaded and the time that it is loaded again. (Shorter intervals than 200 ms are permitted, but not required.)*

If T = 0, receiving ADS-B equipment shall accept airborne position messages as being current as of the time of receipt. The transmitting ADS-B equipment shall reload the airborne position register with updated estimates of the A/V position, at intervals that are no more than 200 ms apart. The process shall continue with new position reports as they become available.

2.1.2.4 Review / Comparison of Precision NON-Time Mark Coupled Case Requirements

2.1.2.4.1 General Requirements Review

Review of the requirements provided in sections 2.1.2.1 –through- 2.1.2.3 of this document indicates that there is fundamental agreement between the requirements given in section 2.2 of RTCA DO-260A, Appendix A of RTCA DO-260A, and ICAO Doc. 9871.

Specifically, the intent of the Non-Time Mark Coupled Case is to attempt to meet the same performance with respect to data in the register as that provided by the Time Mark Coupled Case. The RTCA DO-260A method provided in section 2.1.2.1 of this document does this by increasing the sampling time to 100 milliseconds.

More specifically, RTCA DO-260A Appendix A and the ICAO Doc. 9871 requirements state that the register shall be updated with new position data at intervals that are no more than 200 milliseconds apart. Likewise, the time of applicability and the position loaded into the register shall never be more than 200 milliseconds apart. This specifically indicates that the register must

be updated with new position data every 200 milliseconds and that the time of applicability of that data shall not be more than 200 milliseconds away. In other words, the time of applicability is NOT the Time of the Next Scheduled Transmission.

Note that in this case, when T=0, use of the term *time of applicability* above is somewhat different than in the T=1 case. The time of applicability in this context is equal to the time that the position data entered the ADS-B transmit subsystem (i.e. T_C) plus any amount of extrapolation or advancement of the time variable within an estimator (i.e. $\Delta T_{C \rightarrow D}$). This means that there is an additional component to the end-to-end uncompensated latency outside the control of the ADS-B transmit subfunction, which is equal to T_C-TOA_C, i.e. which is due to the inaccuracy of the assumption that T_C=TOA_C.

2.1.2.5 NON-Time Tag Coupled Precision Extrapolation Implementation

Figure 2 illustrates the extrapolation update flow necessary to meet the requirements as provided in section 2.1.2.1 –through- 2.1.2.3 of this document.

In review of Figure 2, note that the position is always extrapolated to the next 0.1 second EPOCH. That means that the data loaded into the Airborne Position Message register (BDS 0,5) is always applicable at the next 0.1 second EPOCH. Similarly, the register (BDS 0,5) must be updated every 0.1 seconds.

Also, notice that the figure illustrates the proper ODD / EVEN encoding distribution starting with EVEN at the beginning of the EVEN EPOCH.

2.1.2.6 Test Procedures for NON-Time Tag Coupled Precision Extrapolation

Test procedures to validate the precision extrapolation requirements of section 2.1.2.1 –through- 2.1.2.3 of this document are provided in RTCA DO-260A, section 2.4.3.2.3.7.2.2. As with the Time Tag Coupled case, note that the procedures provide a **very precise stimulus** and expect a **very precise response** from the ADS-D transmitting subsystem. The procedures are intended to validate that the extrapolations are being done correctly to the Next **EXACT** 0.1 UTC Epoch while maintaining the expected accuracy of the CPR encoding algorithm. As the intent of sampling at 0.1 seconds is to maintain the accuracy of the Time Tag Coupled Case, the expected accuracy remains at the **5.1** meters previously used for the Time Tag Coupled Case in RTCA DO-260A, section 2.4.3.2.3.7.2.1.

As in section 2.1.1.6 for the Time Tag Coupled Case, test results for Case #7 testing indicated that the maximum error sustained was within approximately **14.5** feet. An occasional slip of 100 milliseconds was observed as indicated by an increase in the error of approximately 172 feet. Efforts are in process to correct this issue but it is considered to be within the MOPs and SARPs requirements given which are attempting to maintain the data in the register to an accuracy of 200 milliseconds.

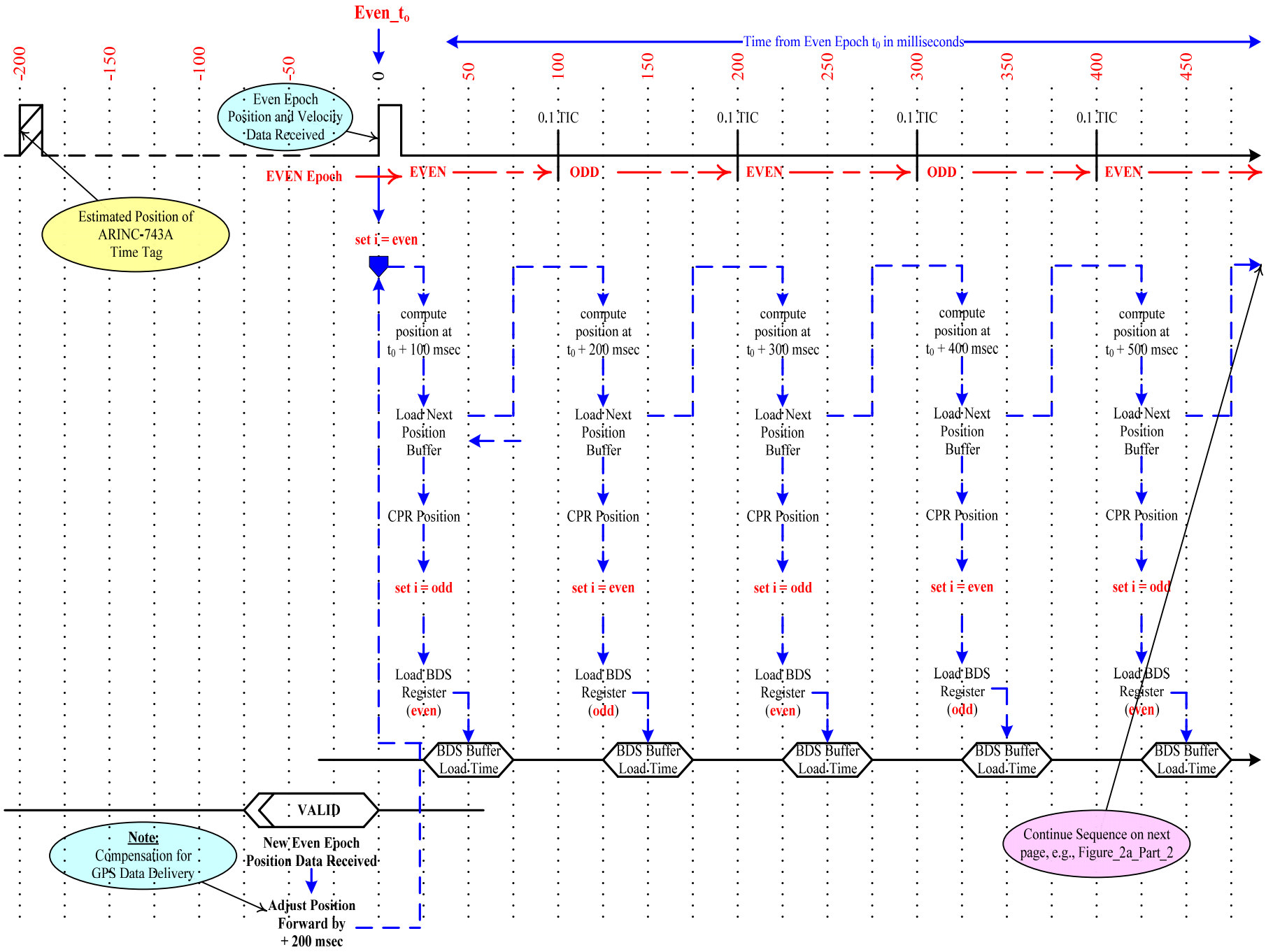

Figure_2a: Precision Extrapolation without GPS Time Tag Coupled__Part 1

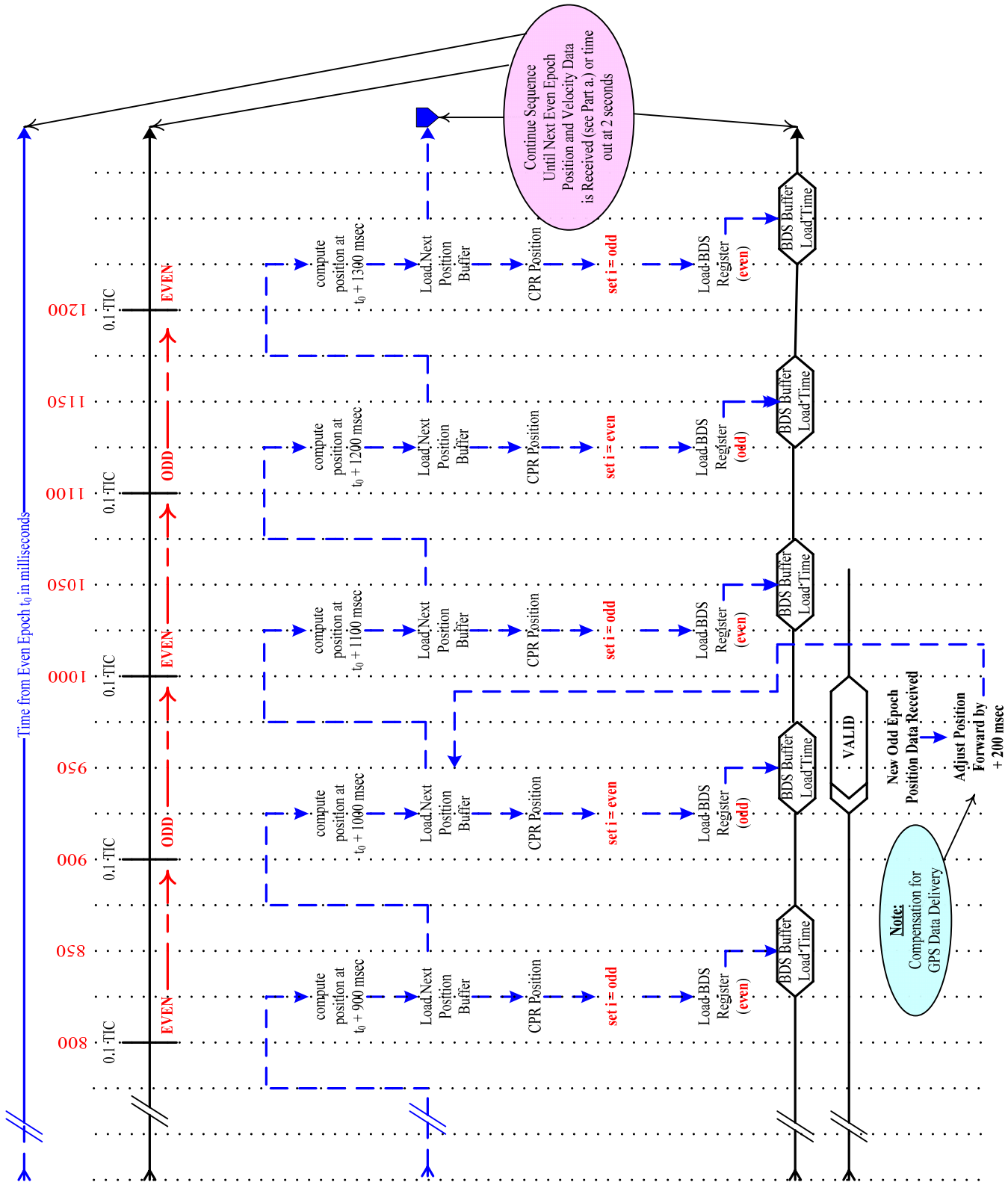

Figure_2b: Precision Extrapolation without GPS Time Tag Coupled_ Part 2

2.1.3 NON-Precision Extrapolation

2.1.3.1 RTCA DO-260A NON-Precision Extrapolation Requirements

Requirements for extrapolating position for the NON-Precision Extrapolation case are replicated from RTCA DO-260A as follows:

"2.2.3.2.3.7.3.1 Airborne Latitude Position Extrapolation Case (non-precision)

ADS-B Airborne Position Messages with TYPE Codes other than 9, 10, 20 or 21 (see section 2.2.3.2.3.1) **shall** contain an estimate of the latitude position at a time of applicability that is within 200 milliseconds of the time that the Airborne Position Message is transmitted. Essentially, the original data and the encoded latitude **shall** be updated at least as frequently as every 200 milliseconds.

COMMENTARY:

The only difference between latitude position extrapolation in the non-precision case and that of the precision case (see section 2.2.3.2.3.7.2.1) is the interpretation of what "Δt" means. In the non-precision case, Δt is the elapsed time from the last received position update to the expected time of transmission of an Airborne Position Message that is based on the last position update.

(In the precision case, Δt is the time interval from the last received leading edge of the GNSS Time Mark to the 0.2 second UTC Epoch which is to be the time of applicability of the Airborne Position Message).

Let:

t_{fix} = *time validity included with the PVT (position, velocity, time) data from the navigation data source.*

t_{update} = *time when the transmitting ADS-B Subsystem receives the most recent PVT (position, velocity, time) data from a navigation data source.*

$t_{message}$ = *time of applicability of the Airborne Position Message*

Δt = $t_{message} - t_{update}$, *in milliseconds*

Φfix = *last known latitude position, at time* t_{fix}, *in degrees*

$\Phi message$ = *latitude, extrapolated forward to the time of applicability of the airborne position message,* $t_{message}$

$\Delta\phi$ = $\phi_{message} - \phi_{fix}$, *in degrees*

v_{NS} = *North / South Velocity*

The earth may be modeled as a sphere with radius such that one nautical mile equals one minute of arc along a great circle. Using that approximation, yields:

$$\phi_{message} = \phi_{fix} + \Delta_{\phi}$$
$$= \phi_{fix} + (v_{NS}/60)(\Delta t/3600000)$$
$$= \phi_{fix} + (v_{NS}\,\Delta t) / (2.16 \times 108)$$

(We divide v_{NS} by 60 to convert from knots in the N-S direction to degrees of latitude per hour, and divide Δt by 3600 x 1000 to convert from milliseconds to hours.)

The result, $\phi_{message}$, is to be encoded in the latitude field of the Airborne Position Message using the CPR algorithm described in Appendix A, section A.1.7.

Note: *In order not to introduce excessive error in the estimated latitude, $\phi_{message}$, the latency, $t_{update} - t_{fix}$, in the delivery of PVT data from the navigation data source should not be excessive."*

2.2.3.2.3.7.3.2 Airborne Latitude Position Estimation Case (non-precision)

ADS-B Airborne Position Messages with TYPE Codes other than 9, 10, 20 and 21 (see section 2.2.3.2.3.1) may implement estimation techniques such as alpha-beta trackers or Kalman filters to satisfy the intent of the position update requirements given in section 2.2.3.2.3.7.3.1. Such techniques provide the capability to decouple the position computation from the message transmission timing provided that the sampled data rate is sufficient to satisfy minimum Nyquist criterion. Likewise such techniques may be necessary in order to provide velocity compensation and/or acceleration estimation in the future.

a. If sampled data estimation techniques, e.g., alpha-beta trackers, alpha-beta-gamma trackers, or Kalman filters, are used to periodically update position data, then the maximum sampled data time **shall** not exceed 100 milliseconds.

b. Sampled data implementations **shall** update the airborne latitude data registers and encoded latitude data subfield at intervals not to exceed **100 milliseconds**

Note: *The 100 millisecond requirement is necessary in order to insure that the 200 millisecond performance required in section 2.2.3.2.3.7.3.1 is not degraded."*

2.1.3.2 RTCA DO-260A Appendix A NON-Precision Extrapolation Requirements

RTCA DO-260A Appendix A ONLY provides requirements for the case discussed in section 2.1.2.2 of this document which deals with the case of Extrapolation when T = "0".

RTCA DO-260A Appendix A **DOES NOT ADDRESS THE NON-PRECISION CASE**: therefore, there are no requirements provided.

2.1.3.3 ICAO Doc. 9871 NON-Precision Extrapolation Requirements

ICAO Doc. 9871 **DOES NOT ADDRESS THE NON-PRECISION CASE**: therefore, there are no requirements provided.

2.1.3.4 Review / Comparison of NON-Precision Extrapolation Requirements

2.1.3.4.1 General Requirements Review

The very first paragraph of RTCA DO-260A section 2.2.3.2.3.7.3.1 (see section 2.1.3.1 of this document) indicates that there is a significant difference between what is allowed by DO-260A but not in ICAO Doc. 9871, nor in DO-260A Appendix A.

Specifically, RTCA DO-260A section 2.2.3.2.3.7.3.1 allows the position to be extrapolated to the next time of transmission. This is NOT allowed in ICAO Doc. 9871. Rather, the real intent of ICAO Doc. 9871 is indicated in ICAO Doc. 9871 section A.2.3.2.3.2 (see section 2.1.2.3 of this document) where "the position being loaded into the register shall have a time of applicability that is never more than 200 milliseconds different from any time during which the register holds that data". The considerable difference in the two methods can induce significant error between what is in the register and what should be in the register. These differences will be discussed in the following section in regards to Non-Precision Extrapolation Implementation.

Commentary:

At this point, the question arises as to why RTCA DO-260 added the NON-Precision Case to begin with. Having been a principal author of the DO-260 requirements and particularly the sections and test procedures in question, the best that my memory can provide some 9 to 10 years downstream is that there were those who wanted to be able to use virtually whatever position data source was available for extended squitter. Note that such position sources could have been several orders of magnitude less accurate than an Avionics qualified GPS, FMS, or IRS. Also, the requirements were written at a time when INTEGRITY was yet to be considered as a driving issue. Consequently, it appears that the NON-Precision requirements were added to satisfy minimum performance interests. Perhaps, such application should not be the case as DO-260A and now DO-260B are driven by much more precise integrity and accuracy needs.

2.1.3.5 NON-Precision Extrapolation Implementation

Figure 3 illustrates the Non-Precision Extrapolation Implementation and the difference that it poses to the Precision Non-Time Tag Coupled method.

Review of **Figure 3** shows that the Non-Precision Extrapolation method results in the register being loaded with the value that is applicable at the time of Transmission. This is directly opposed to the intent of DO-260A Appendix A and ICAO Doc. 9871 which require that "the position being loaded into the register shall have a time of applicability that is never more than 200 milliseconds different from any time during which the register holds that data".

Figure 3 also illustrates that the Non-Precision Extrapolation could result in register contents that are applicable as much as **450** milliseconds away for what is supposed to be in the register in accordance with DO-260A Appendix A (see section 2.1.2.2 of this document) and ICAO Doc. 9871 (see section 2.1.2.3 of this document).

Note: *Although the paragraph above indicates a value of **450** milliseconds, this is just for the example depicted in **Figure 3**. In reality, the value approaches **600** milliseconds as a*

limit since that is the most that two consecutive airborne position message transmissions can be separated.

2.1.3.6 Test Procedures for NON-Precision Extrapolation

Test Procedures for NON-Precision Extrapolation are called out in RTCA DO-260A section 2.4.3.2.3.7.3.1 which in turn calls out section 2.4.3.2.3.7.2.1. Effectively, the same procedures should be used to validate NON-Precision Extrapolation as were used to validate Precision NON-Time Tag Coupled (T=0) Extrapolation.

Pursuant to the previous discussions, there is no way that NON-Precision Extrapolation can be qualified to the Precision NON-Time Tag Coupled (T=0) procedures as the former is applicable at the time of Transmission of the Message and the latter is applicable at 0.1 second Tics.

Likewise, test procedures for NON-Precision Estimation are called out in RTCA DO-260 section 2.4.3.2.3.7.3.2 which in turn calls out section 2.4.3.2.3.7.2.2. Effectively, the same procedures should be used to validate NON-Precision Estimation as were used to validate Precision NON-Time Tag Coupled (T=0) Estimation.

Again, pursuant to the previous discussions, there is no way that NON-Precision Estimation can be qualified to the Precision NON-Time Tag Coupled (T=0) procedures as the former is Applicable at the time of Transmission of the Message and the latter is applicable at 0.1 second Tics.

2.1.3.7 Baseline Conclusion regarding Non-Precision Extrapolation/Estimation

The initial conclusion is that the SARPs, e.g., ICAO Doc. 9871 never expected to allow that the message in the register be applicable at the time of transmission. Likewise, DO-260 Appendix A, nor DO-260A never expected to allow that the message in the register be applicable at the time of transmission. Rather, the two documents expect the register contents to never be further away than 200 milliseconds from the time of applicability. Again, the time of applicability here is in the context of assuming that T_C=TOA_C.

With these considerations in mind, strong consideration should be made to NOT Allow the implementation of the Non-Precision Extrapolation or Estimation as stated in RTCA DO-260A. Therefore, RTCA DO-260A sections 2.2.3.2.3.7.3 –through- 2.2.3.2.3.7.3.2 should be removed from the MOPs completely.

Note that this recommendation has been made only for Airborne Position Message Latitude processing. Similar sections for Airborne Position Message Longitude processing should be removed. Likewise, similar sections for Surface Position Message Latitude and Longitude processing should be removed. Once these sections are removed, all applicable test sections in section 2.4 of RTCA DO-260A should be removed.

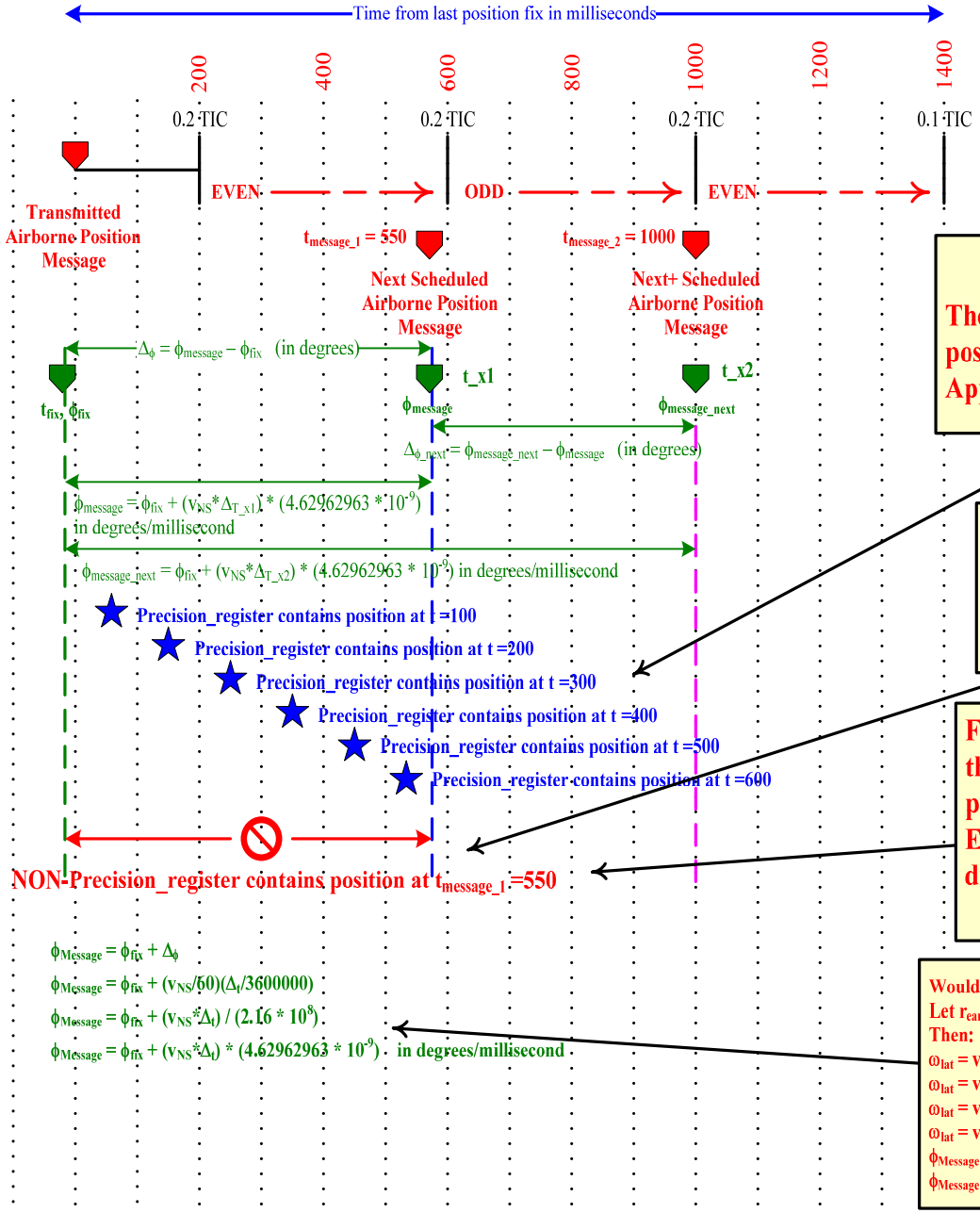

NOTE:
The Precision Non-Time Tag method is computing the position every 100 milliseconds to the Time of Applicability which is the next 100 millisecond Time Tic.

CONVERSELY:
The Non-Precision method is computing the position to the Time of Applicability which is the next Time of Transmission.

For this example, the worse case error approaches that of the position given by $t_{message_1}$ @ 550 and the precision register contents having position at t @ 100. Effectively a difference in position caused by a difference in Time of Applicability of 450 msec.

Would be more accurate to convert tangential velocity to radial velocity:
Let r_{earth} = mean radius of earth = 3444.069252 nautical miles
Then:
$\omega_{lat} = v_{NS} *(1/3444.069252)*(1/3600)*360*(1/2\pi)$ in degrees/second
$\omega_{lat} = v_{NS} *(1/3444.069252)*(1/3600)*360*(1/2\pi)$ in degrees/second
$\omega_{lat} = v_{NS} *(4.621130745*10^{-6})$ in degrees/second
$\omega_{lat} = v_{NS} *(4.621130745*10^{-9})$ in degrees/millisecond
$\phi_{Message} = \phi_{fix} + (\omega_{lat} * \Delta_t)$ in degrees/millisecond
$\phi_{Message} = \phi_{fix} + (v_{NS} * \Delta_t) * (4.621130745 * 10^{-9})$ in degrees/millisecond

Figure_3: Non-Precision Extrapolation

2.2 Latency Issues

During SC-186 WG-3 / Eurocae WG-51, SG-1 Meeting #26 held at RTCA, Washington, D.C., 1090-WP26-29 proposed the two following changes in regards to latency issues:

1. For T=1, the position shall be applicable at the appropriate 0.2 UTC Epoch to within +/- 15 milliseconds

   a. Test procedures involve constant velocity and the tolerance at the measurement points will reflect 15 milliseconds at that velocity.

2. For T=0, the position shall be within +/- 100 milliseconds of the time of transmission

   a. Precisely, $|T_D - (T_C + \Delta T_{C\text{--}D})| < 100$

   b. Test procedures involve constant velocity and the tolerance at the measurement points will reflect 100 milliseconds at that velocity.

2.2.1 Discussion for Proposed Change #1

As discussed previously in section 2.1.1.6 of this document, the current test limits for the T = 1 case are set at 6.375 meters. This limit was taken as **(1.25) * (5.1)** since **5.1** meters is the accuracy of the CPR encoding specified in RTCA DO-260A Appendix A and in ICAO Doc. 9871. Adding a **25%** boundary to the **5.1** results in the final value of **6.375** meters or **20.91535436** feet. Now, to establish a bound of **+/- 15** milliseconds at a velocity of **1020** knots, translates into a boundary of **+/- 25.6303849** feet.

Now, apparently, some vendors have indicated that they cannot meet the requirements currently specified in the MOPs test procedure and requested that +/- **15** milliseconds be added. Considering that other vendors have been able to pass the currently established limits, it does not seem practical to be changing the ICAO SARPs, e.g., Doc. 9871 for a minimal boundary change of **+/- 4.715030542** feet.

Therefore, the author of this document recommends that **NO CHANGE be made in order to minimize impact to the SARPs.**

2.2.2 Discussion for Proposed Change #2

As discussed previously in section 2.1.3.4.1 and 2.1.3.7 of this document, RTCA DO-260A Appendix A and ICAO Doc. 9871 DO NOT PROVIDE or ALLOW for implementation of the NON-Precision Case where position is extrapolated or estimated to the next Time of Transmission. Therefore, the recommendation in section 2.1.3.7 was to NOT allow it in DO-260B.

Rather, the real intent has previously been discussed in section 2.1.2.3 of this document which states "the position being loaded into the register shall have a time of applicability that is never more than 200 milliseconds different from any time during which the register holds that data". This requirement coupled with others discussed previously in this document strongly indicate that what is important is the loading of the register with data that is applicable within 200 milliseconds of when the data is loaded and NOT the Time of Transmission.

Therefore, for consistency with ICAO Doc. 9871 section A.2.3.2.3.2 and RTCA DO-260A Appendix A, section A.2.3.2.3.2, the proposed change 2 given above should be changed to read as follows:

2. **For T=0, the time of applicability of the position loaded into the register shall never be more than +/- 100 milliseconds different from any time at which the register contains the position data to which the time of applicability applies.**

3. Summary / Conclusion

This document has reviewed the requirements for Position Extrapolation as provided in RTCA DO-260A Section 2.2 and Appendix A, as well as those provided in ICAO Doc. 9871. Pursuant to such review, this document poses the following Summarized Conclusions:

- **RTCA DO-260A, Section 2.2.3.2.3.7.3.1 ALLOWS NON-PRECISION CASE WHERE POSITION IS EXTRAPOLATED TO NEXT TIME OF MESSAGE TRANSMISSION** (see section 2.1.3.1 of this document)
  - **RTCA DO-260A, APPENDIX A, DOES NOT PROVIDE FOR NON-PRECISION CASE AND NEVER ALLOWS EXTRAPOLATION TO NEXT TIME OF MESSAGE TRANSMISSION** (see section 2.1.3.2 of this document)
  - **ICAO DOC. 9871 DOES NOT PROVIDE FOR NON-PRECISION CASE AND NEVER ALLOWS EXTRAPOLATION TO THE NEXT TIME OF MESSAGE TRANSMISSION** (see section 2.1.3.3 of this document)
  - **NON-PRECISION CASE WAS PROBABLY ADDED IN DO-260 IN ORDER TO APPEASE THOSE WANTING TO IMPLEMENT THE MOST SIMPLE OF POSITIONAL DATA SOURCES WITH LIMITED AND/OR QUESTIONABLE INTEGRITY AND ACCURACY**
  - **RECOMMENDATIONS**
    - **REMOVE, e.g., DELETE, ALL NON-PRECISION CASE EXTRAPOLATION OR ESTIMATION REQUIREMENTS AND TEST PROCEDURES FROM RTCA DO-260A/B**
    - **RETAIN PRECISION T=1 REQUIREMENTS AND TEST PROCEDURES IN RTCA DO-260B AS CURRENTLY WRITTEN IN RTCA DO-260A, BUT REMOVING RESTRICTION TO PRECISION TYPE CODES.**
    - **DRAFT T=0 REQUIREMENTS AND TEST PROCEDURES IN RTCA DO-260B. BASE REQUIREMENTS OFF OF THE PROPOSED CHANGE 2 IN THIS WORKING PAPER. DEVELOP TEST PROCEDURES SIMILAR TO THOSE FOR T=1, MODIFIED TO TEST THAT THE TIME OF APPLICABILITY OF THE POSITION DATA IN THE MESSAGE IS WITHIN 100 MILLISECONDS OF THE TIME OF TRANSMISSION OF THE MESSAGE.**

- **ADDITIONALLY:**
- **WILL NEED TO UPDATE RTCA DO-260B APPENDIX A**
- **WILL NEED TO UPDATE ICAO DOC. 9871**

- **REGARDING LATENCY CHANGES PROPOSED IN 1090-WP26-29**
  - **PROPOSED CHANGE 1 IS NOT NEEDED AS DISCUSSED IN SECTION 2.2.1 OF THIS DOCUMENT.**
    - **RETAIN LIMIT AT EXACT 0.2 UTC: OTHERWISE, CHANGES WILL BE NEEDED TO BE MADE TO ICAO DOC. 9871 AND RTCA DO-260A APPENDIX A**
  - **PROPOSED CHANGE 2 SHOULD NOT BE DONE AS IT IS DIRECTED AT TIME OF TRANSMISSION**
    - **UPDATE REQUIREMENTS TO BE CONSISTENT WITH ICAO DOC. 9871 AND RTCA DO-260A, APPENDIX A AS DISCUSSED IN SECTION 2.2.2 OF THIS DOCUMENT**
    - **STRONGLY RECOMMEND THAT REQUIREMENT BE CHANGED TO READ AS PER SECTION 2.2.2, PROPOSED CHANGE 2 OF THIS DOCUMENT: e.g.,**

"The time of applicability of the position loaded into the register shall never be more than 100 milliseconds different from any time at which the register contains the position data to which the time of applicability applies." Note that "time of applicability" here is with respect to the time that the position data entered into the ADS-B transmit subsystem, i.e. T_C. Precisely, the requirement reads that

$$\left| t_{REG} - (T_C + \Delta T_{C \rightarrow D}) \right| < 100 \text{ milliseconds}$$

where t_{REG} is any time that the position data is in the register. This is consistent with the assumption in the commentary

- **FINAL ON UNCOMPENSATED LATENCY**
  - **UNCOMPENSATED LATENCY SHOULD BE CONSTRAINED TO NO MORE THAN 100 MILLISECONDS AT THE INPUT TO THE ADS-B TRANSMIT SUBSYSTEM, e.g., MEANING THE ADS-B TRANSMIT FUNCTION (this is as per previous verbal agreements)**

- **THE UNCOMPENSATED LIMIT OF 100 MILLISECONDS MEANS THAT IT IS APPLIED AFTER THE GNSS DATA DELIVERY DELAY, DATA CONCENTRATOR, IF IT IS USED, ETC. I.E. IT IS MEASURED FROM T_C.**

- **IF THE 100 MILLISECOND LIMIT ON UNCOMPENSATED LATENCY IS MET IN THIS MANNER, THEN THE PRECISION EXTRAPOLATION AND/OR ESTIMATION METHODS WILL DO THEIR JOB IN MEETING THE MOPS AND SARPS**

In closing, the Working Group is invited to review all of the suggested changes and consider removing the NON-Precision methods discussed in the interest of improving the overall understanding of the latency issues.