Working Paper ModeS-WP05-04
11-14 February, 2008

RTCA SC-209, Working Group #1, Meeting #5

(Post___WG49N14_Paris_January_2008)

Updated Elementary Surveillance, Enhanced Surveillance and Generic Requirements in RTCA DO-181D v1-1 section 2.2.24, 2.2.25, and 2.2.26

Updated ELS, EHS, and Generic Test Procedures in section 2.6, 2.7, and 2.8

Rev. E__February 06, 2008

Prepared and Presented by R.H. "Bob" Saffell

SUMMARY

This Rev. E Working Paper provides updates to all ELS, EHS, and Generic Requirements and Test Procedures subsequent to the EUROCAE WG49N14 Meeting in Paris, France in January, 2008.

Changes that were made in the document are highlighted in Light Blue. All changes agreed at the WG49N14 meeting have been implemented.

A Rev. F document will be prepared which removes the highlighting and commentary such that the Rev. F sections can be implemented directly into the latest version of RTCA DO-181D in preparation for the SC-209 / WG-49 combined meetings in Melbourne, Florida in February, 2008.

RTCA, Inc.
1828 L Street, NW, Suite 805
Washington, DC 20036-5133 USA

MINIMUM OPERATIONAL PERFORMANCE STANDARDS FOR AIR TRAFFIC CONTROL RADAR BEACON SYSTEM/MODE SELECT (ATCRBS/MODE S) AIRBORNE EQUIPMENT

Draft
Version

RTCA/DO-181D Prepared by SC-209
MM DD, YYYY © 2008 RTCA, Inc.
DO-181D supersedes DO-181C and all published changes thereto
Appendix B to DO-181D supercedes DO-218B

CHANGE HISTORY

Date / Version	Description
Feb 2008 DO-181D-ELS+EHS_Tests	This version updates the test procedure sections of §2.6, §2.7 and adds section §2.8 in accordance with updates that were reviewed and approved during the meeting of SC-209, WG-1 on 4 – 6 December 2007 at RTCA. DO-181D Test Procedure sections §2.3, §2.4, §2.5 as well as the ELS/EHS requirements sections §2.2.24, §2.2.25 and §2.2.26 remain in this draft for comparison purposes only.

2.2.23.1.9 Subfields in MB for Extended Squitter

2.2.23.2 Event-Driven Squitter

2.2.23.3 Extended Squitter/Non Transponder Devices

2.2.23.4 Extended Squitter Military Application

2.2.23.4.1 Military Format

2.2.23.5 Extended Squitter Maximum Transmission Rate

2.2.24 Elementary Surveillance (ELS) Compliant Transponder

Elementary Surveillance has been defined as a functional capability necessary to support airspace operations in European airspace.

a. As a minimum, the transponder **shall** be a Level 2 transponder in accordance with §1.4.3.2 in order to support implementation of Elementary Surveillance functions.

b. The following subparagraphs summarize the functional aspects necessary to implement Elementary Surveillance.

Note: *The following subparagraphs do not declare actual requirements (e.g.* ***"shall"*** *statements). Such actual requirements are specified in subsequent subsections in order to establish traceability. The following subparagraphs are intended to introduce the Elementary Surveillance needs in order to improve understanding of the actual requirements provided in subsequent subsections.*

(1). Flight status reporting (FS) as described in §2.2.14.4.14. The Mode S transponder is capable of automatically acquiring the on-the-ground status as described in §2.2.18.2.7.

(2). Barometric pressure altitude reporting as described in §2.2.13.1.2.a.

(3). CA as specified in §2.2.14.4.6

(4). II and SI code as defined §2.2.24.2.

(5). Declaration of capability in register 10_{16} as described in §2.2.19.1.12.6.3 and further detailed in §2.2.24.3.

(6). Aircraft register 17_{16} as defined in §2.2.24.4.

(7). Aircraft registers 18_{16} {through $1C_{16}$} as defined in §2.2.24.5.

(8). Aircraft identification reporting in register 20_{16} as detailed in §2.2.19.1.13 and further detailed in. §2.2.24.6.

(9). As an option, Aircraft register 21_{16}.

c. In addition, the Mode S transponder must be capable of ACAS operation in accordance with all requirements defined in §2.2.22. In particular, the transponder reports ACAS capability and version in register 10_{16} as well as the RA Report in register 30_{16}.

Note: *For the remaining subsections of this section, servicing of a field or subfield in a register implies that valid data has been received at a sufficient rate to meet the update requirements specified for the given register in Appendix B.*

2.2.24.1 Ground Initiated Comm-B

Mode-S Transponders **shall** support extraction of Registers 10_{16}, 17_{16}, 18_{16} -through- $1C_{16}$, 20_{16} and 21_{16} **(Optional)** using the Ground Initiated Comm-B Protocols in accordance with §2.2.19.1.12.3.

Note: *In general, a level 2 ELS capable transponder replies to all GICB register extraction request (see §2.2.19.1.12.3). If the requested register is not serviced by the transponder, then the "MB" field of the transponder reply contains All ZERO's.*

2.2.24.2 Surveillance Identifier ("SI") Code Requirements

2.2.24.2.1 MOPS Requirements Relevant to "SI"

Mode-S Transponders support the requirements of the Surveillance Identifier ("SI") codes in accordance with the following sections of this document.

a. §2.2.14.4.11, "DI" Designator, Identification Field

b. §2.2.14.4.17, "II" Interrogator Identification Field

c. §2.2.14.4.30, "PI" Parity / Interrogator Identity

d. §2.2.14.4.36, "SD" Special Designator and "IIS", Subfield in "SD"

e. §2.2.14.4.9, "CL" Code Label

f. §2.2.14.4.15, "IC" Interrogator Code

g. §2.2.14.4.36, "SI" Surveillance Identifier

h. §2.2.18.2.1, Basic Mode-S Error Protection

i. §2.2.18.2.5, "Multisite Lockout Protocol"

j. §2.2.18.2.6, "Acquisition Squitter"

k. §2.2.23.1.1, "Extended Squitter Format (DF=17)"

l. §2.2.18.2.9, "All-Call Reply Protocol"

Note: *Item "k." in regards to Extended Squitter" is included herein since the "SI" field must be set to "0" in generating the "PI" field in accordance with §2.2.14.4.29. Therefore, if the transponder implements Extended Squitter, then subparagraph "k." applies.*

RHS Commentary: *Change 2.2.14.4.30 –to- 2.2.14.4.29, also Change 2.2.14.4.37 to 2.2.14.4.36, because GF changed the numbering. Remove this commentary after completion of changes in review copy.*

2.2.24.3 Declaration of Capability in Register 10_{16} – Data Link Capability Report

2.2.24.3.1 Purpose and Definition

Register 10_{16} **shall** be formatted as specified in Appendix B, Table B-3-16 and associated notes.

Note: *The following subsections detail the minimum requirements for servicing register 10_{16} in regards to Elementary Surveillance. Other fields in register 10_{16} that do not pertain to Elementary Surveillance need to be managed in accordance with the additional capabilities supported by the transponder.*

2.2.24.3.2 Data Requirements

2.2.24.3.2.1 Bit 1 –through- 8, BDS Code

Bits **1** –through- **8** of register 10_{16} **shall** be encoded with 10 HEX (0001 0000) (e.g., the BDS Register code).

Note: *The setting of the BDS code by the transponder ensures that a broadcast change of the capability report will contain the BDS code for all cases of data link failure (e.g., the loss of the transponder data link interface).*

RHS Commentary: *Spelling correction on transponder in the Note, first line. Remove this commentary after making corrections to review copy.*

2.2.24.3.2.2 Bit 17 –through- 23, Declaration of Mode-S Subnetwork Number

Bits **17** –through-- **23** of Register 10_{16} **shall** be encoded with the Mode-S Subnetwork Version Number in accordance with the following table:

Table 2.2.24.3.2.2: Mode S Subnetwork Version Number Encoding

Version Number	Year of ICAO Annex 10 Amendment	Edition of ICAO Doc. 9871	Comment
0	Mode S Subnetwork Not Available		
1	1996	-----	
2	1997	-----	
3	2002	-----	Annex 10, Amendment 77
4	2007	Edition 1	
5–127	Not Assigned		

To be consistent with Elementary and Enhance Surveillance requirements (e.g., this version of these MOPS), the Mode S Subnetwork Version Number **shall** be set to **"3"** or "higher".

2.2.24.3.2.3 Bit 25, Declaration of No Mode S Specific Services Capability

Bit **25** of Register 10_{16} **shall not** be set to ONE (1) when reporting only Aircraft Identification in register 20_{16} when no other Mode S Specific Services are supported by the transponder.

Note: *When bit 25 is set to 1, it indicates that at least one Mode S specific service is supported other capability reports need to be checked in order to determine which registers are supported. Mode S Specific Service refers to the*

servicing of registers other than GICB services related to Registers 02_{16}, 03_{16}, 04_{16}, 10_{16}, 17_{16} -through- $1C_{16}$, 20_{16} and 30_{16}.

2.2.24.3.2.4 Bit 33, Aircraft Identification Reporting Capability

RHS_Commentary: *RHS Correction made from 23 to 33 in the title. Remove this commentary after making correction in review copy.*

Servicing of Register 20_{16} requires the updating of Register 10_{16} as follows:

a. Register 10_{16} (Data Link Capability Report) bit **33 shall** be set to ONE (1) if the transponder is receiving any data from the Aircraft installation with which to service Register 20_{16} with Aircraft Identification or Aircraft Registration data as provided in the respective sections for each BDS register in the subsequent sections of this document.

Note: *This requirement is not established by the transponder LRU own capability to service Register 20_{16}. Rather, it is established by the Aircraft installation capability to provide the transponder with the appropriate data with which to then service Register 20_{16}.*

a. Register 10_{16} (Data Link Capability Report) bit **33 shall** be set to ZERO (0) if the transponder is receiving no data from the Aircraft installation that could be used to properly service Register 20_{16}.

Note: *When bit 33 of Register 10_{16} is changed, the change is broadcast as required in §2.2.19.12.3 and further defined in §2.24.4.*

2.2.24.3.2.5 Bit 35, Surveillance Identifier Code (SI)

Bit **35** of register 10_{16} **shall** be set to ONE (1) to indicate that the transponder supports "SI" code capability.

Note: *"SI" code support is a mandatory requirement capability for all transponders.*

2.2.24.3.2.6 Bit 36, Common Usage GICB Capability Report

a. Register 10_{16} (Data Link Capability Report) bit **36 shall** be toggled (i.e., changed from "0" to "1", or from "1" to "0") each time that the Common Usage GICB Capability Report (Register 17_{16}) is changed.

b. To avoid the generation of too many broadcast capability report changes, Register 17_{16} **shall** be sampled at approximately one minute intervals to check for changes that may require the toggling of bit **36** as discussed in subparagraph "a."

2.2.24.3.3 Minimum Update Interval

a. The minimum update interval at which Register 10_{16} **shall** be reloaded with valid data is **≤4.0** seconds.

Note: *Effectively, Register 10_{16} must be updated every 4.0 seconds or sooner.*

b. Register 10_{16} **shall** be updated within one second of the data changing and at least every four seconds thereafter.

c. If a particular data field in Register 10_{16} cannot be updated within **8.0** seconds (e.g., twice the specified minimum update interval of **≤4.0** seconds), then the data field **shall** be ZEROed.

2.2.24.3.4 Change Reporting

When register 10_{16} is changed, then the register **shall** be broadcast as described in §2.2.19.1.12.8.

2.2.24.4 Register 17_{16}, Common Usage GICB Capability Report

2.2.24.4.1 Purpose and Definition

The format of register 17_{16} **shall** be formatted as specified in Appendix B table B-3-23 and associated notes.

Note: *The purpose of register 17_{16} is to indicate which registers are currently supported by the aircraft installation, i.e., currently contain data useable for operational use.*

Elementary Surveillance transponders manage the following bits of register 17_{16}:

a. Bit **7** to indicate servicing of Register 20_{16},

b. Bit **8** to indicate servicing of Optional Register 21_{16}.

2.2.24.4.2 Data Requirements

2.2.24.4.2.1 Required Servicing of Register 17_{16} Associated with Register 20_{16}

a. Register 17_{16} bit **7 shall** be set to ONE (1) if the transponder is servicing either Aircraft Identification (also referred to as Aircraft Identification as specified in the Aircraft Plan) or Aircraft Registration data in the Aircraft installation.

Note: *This requirement is not established by the transponder LRU own capability to service Register 20_{16}. Rather, it is established by the Aircraft installation capability to provide the transponder with the appropriate data with which to then service Register 20_{16}.*

b. Register 17_{16} bit **7 shall** be set to ZERO (0) if the transponder is receiving no data from the Aircraft installation that could be used to properly service Register 20_{16}.

2.2.24.4.2.2 Required Servicing of Register 17_{16} Associated with Optional Register 21_{16}

Note: *Elementary Surveillance does not require that Register 21_{16} be serviced. However, if Register 21_{16} is serviced, the following subparagraphs need to be complied with.*

a. Register 17_{16} bit **8 shall** be set to ONE (1) if the transponder is receiving Aircraft Registration data in the Aircraft installation.

Note: *This requirement is not established by the transponder LRU own capability to service Register 21_{16}. Rather, it is established by the Aircraft installation capability to provide the transponder with the appropriate data with which to then service Register 21_{16}.*

b. Register 17_{16} bit **8 shall** be set to ZERO (0) if the transponder is receiving no data from the Aircraft installation that could be used to properly service Register 21_{16}.

2.2.24.4.3 Minimum Update Interval of Register 17_{16}

a. The minimum update interval at which Register 17_{16} **shall** be reloaded with valid data is **5.0** seconds.

Note: *Effectively, Register 17_{16} must be updated at least once every 5.0 seconds.*

b. The time between availability of data that causes a change in Register 17_{16} and the time that the change is made to Register 17_{16} **shall** be less than the minimum update interval specified as **5.0** seconds.

c. If a particular data field in Register 17_{16} cannot be updated within **10.0** seconds (e.g., twice the specified minimum update interval of **5.0** seconds), then the status bit (if specified for that field) **shall** indicate that the data in that field is invalid and the data field **shall** be ZEROed.

2.2.24.4.4 Register 17_{16} Change Reporting

Whenever the contents of Register 17_{16} change, bit **36** of Register 10_{16} **shall** be toggled as defined in §2.2.24.3.2.6.

2.2.24.5 Register 18_{16} –to- $1C_{16}$, Mode S Specific Services Capability Reports

2.2.24.5.1 Purpose and Definition

The Mode-S transponder **shall** format Register 18_{16} -through- $1C_{16}$ as defined in Appendix B, Table B-3-24 -through- Table B-3-28 and associated notes for Register 18_{16} -through- $1C_{16}$, respectively.

Note 1: *Registers 18_{16} to $1C_{16}$ are used to indicate the capability of the aircraft installation to provide data for each register i.e. the register or a part of the register is managed by the transponder and it is known that data can be received from the installation to fill this field.*

Note 2; *This is not established by the Transponder LRU own capability. Rather, it is established by the Aircraft installation capability to provide the transponder with the appropriate data with which to service the corresponding register. Once this capability is established it remains set until power- off of the transponder.*

Transponders that support Elementary Surveillance functions manage register 18_{16} as follows:

a. Register 18_{16} bit **41** to indicate that the installation has the capability to provide data in Register 10_{16}.

b. Register 18_{16} bit **34** to indicate that the installation has the capability to provide data in Register 17_{16}.

c. Register 18_{16} bit **33** to indicate that the installation has the capability to provide data in Register 18_{16}.

d. Register 18_{16} bit **25** to indicate that the installation has the capability to provide data in Register 20_{16}.

e. As an Option, Register 18_{16} bit **24** to indicate that the installation has the capability to provide data in Register 21_{16}.

Note 3: *Although not a function of Elementary Surveillance, Register 18_{16} bit 9 is set when the transponder is interfaced with TCAS to indicate that the ACAS Active Resolution Advisory Register 30_{16} is supported.*

Note 4: *Elementary Surveillance only requires that Register 18_{16} be serviced; Therefore, if no other transponder functions require the servicing of Register 19_{16} –through- $1C_{16}$, these registers will be set to ALL ZERO.*

2.2.24.5.2 Data Requirements

2.2.24.5.2.1 Required Servicing of Register 18_{16} Associated with Register 10_{16}

a. Register 18_{16} bit **41 shall** be set to ONE (1) if the transponder is required to service any part of Register 10_{16}.

Note: *This requirement is not established by the Transponder LRU own capability to service Register 17_{16}. Rather, it is established by the Aircraft installation capability to provide the transponder with the appropriate data of which processing would result in the need to update Register 17_{16}.*

b. Once Register 18_{16} bit **41** has been set to ONE (1) during a particular power-on cycle, then it **shall** remain set to ONE (1) **until power-off** of the transponder.

2.2.24.5.2.2 Required Servicing of Register 18_{16} Associated with Register 17_{16}

a. Register 18_{16} bit **34 shall** be set to ONE (1) if the transponder is required to service any part of Register 17_{16} as provided in §.

Note: *This requirement is not established by the Transponder LRU own capability to service Register 17_{16}. Rather, it is established by the Aircraft installation capability to provide the transponder with the appropriate data of which processing would result in the need to update Register 17_{16}.*

b. Once Register 18_{16} bit **34** has been set to ONE (1) during a particular power-on cycle, then it **shall** remain set to ONE (1) **until power-off** of the transponder.

c. Register 18_{16} bit **34 shall** be set to ZERO (0) if the transponder receives no data from the Aircraft installation that could result in the need to service Register 17_{16} as provided in §2.2.24.4 .

2.2.24.5.2.3 Required Servicing of Register 18_{16} Associated with Register 18_{16}

a. Register 18_{16} bit **33 shall** be set to ONE (1) if the transponder is required to service any part of Register 18_{16}.

Note: *This requirement is not established by the Transponder LRU own capability to service Register 18_{16}. Rather, it is established by the Aircraft installation capability to provide the transponder with the appropriate data of which processing would result in the need to update Register 18_{16}.*

b. Once Register 18_{16} bit **33** has been set to ONE (1) during a particular power-on cycle, then it **shall** remain set to ONE (1) **until power-off** of the transponder.

c. Register 18_{16} bit **33 shall** be set to ZERO (0) if the transponder receives no data from the Aircraft installation that could result in the need to service Register 18_{16}.

2.2.24.5.2.4 Required Servicing of Register 18_{16} Associated with Register 20_{16}

a. Register 18_{16} bit **25 shall** be set to ONE (1) if the transponder has received either Aircraft Identification (also referred to as Flight Identification as specified in the Flight Plan) or Aircraft Registration data in the Aircraft Installation since the power-on of the transponder..

Note: *This requirement is not established by the Transponder LRU own capability to service Register 20_{16}. Rather, it is established by the Aircraft installation capability to provide the transponder with the appropriate data with which to then service Register 20_{16}.*

b. Once Register 18_{16} bit **25** has been set to ONE (1), then it **shall** remain set to ONE (1) **until power-off** of the transponder.

c. Register 18_{16} bit **25 shall** be set to ZERO (0) if the transponder has received no data from the Aircraft installation that could be used to properly service Register 20_{16} **since power-on** of the transponder.

2.2.24.5.2.5 Required Servicing of Register 18_{16} Associated with Register 21_{16}

Note: *Elementary Surveillance does not require that Register 21_{16} be serviced. However, if Register 21_{16} is serviced, the following subparagraphs need to be complied with.*

a. Register 18_{16} bit **24 shall** be set to ONE (1) if the transponder has received Aircraft Registration data in the Aircraft Installation **since power-on** of the transponder.

Note: *This requirement is not established by the Transponder LRU own capability to service Register 21_{16}. Rather, it is established by the Aircraft installation capability to provide the transponder with the appropriate data with which to then service Register 21_{16}.*

b. Once Register 18_{16} bit **24** has been set to ONE (1), then it **shall** remain set to ONE (1) **until power-off** of the transponder.

c. Register 18_{16} bit **24 shall** be set to ZERO (0) if the transponder has received no data from the Aircraft installation that could be used to properly service Register 21_{16} **since power-on** of the transponder.

2.2.24.5.3 Minimum Update Interval of Register 18_{16} –to- $1C_{16}$

a. The minimum update interval at which Register 18_{16} (and/or Register 19_{16} –to- $1C_{16}$ if implemented) **shall** be reloaded with valid data is **5.0** seconds. i.e., Register 18_{16} (and/or Register 19_{16} –to- $1C_{16}$ if implemented) **shall** be updated at least once every **5.0** seconds.

b. The time between availability of data that causes a change in Register 18_{16} (and/or Register 19_{16} –to- $1C_{16}$ if implemented) and the time that the change is

made to Register 18_{16} (and/or Register 19_{16} –to- $1C_{16}$ if implemented) **shall** be less than the minimum update interval specified as **5.0** seconds.

c. The setting of bits in Register 18_{16} –to- $1C_{16}$ is static. If a bit has been set to ONE (1) in one of these registers since power-on of the transponder, then the bit **shall** remain set to ONE (1) until power-off of the transponder.

2.2.24.6 Register 20_{16} -- Aircraft Identification and Data Sources

2.2.24.6.1 Purpose and Definition

The Mode-S transponder **shall** format Register 20_{16} as defined in Appendix B, Table B-3-32 and associated notes.

Note 1: *ICAO Annex 10, Volume IV requires that the aircraft identification to be used is that employed in the flight plan. When no flight plan is available, the registration marking is used if available, otherwise the aircraft identification is set to ALL ZERO's,*

Note 2: *On aircraft, it is possible to have access to data from an interface where the pilot can enter the data that is employed in the flight plan. This could be the telephony designator of the aircraft operating agency, followed by the Aircraft identification or the registration marking of the aircraft. This piece of information is considered as variable data and the transponder cannot know what is really entered by the pilot (depending on operational procedure). This piece of information is named "**Aircraft Identification**" within the rest of this section. In ARINC, it is normally provided via ARINC Labels 233 -through- 237 or by Label 360 for block transfer data.*

*In addition on some platforms it is also possible to receive another piece of data which is the registration marking (tail number). This is considered as a fixed data which does not vary during the flight. This piece of information can only be used when there is no data coming from the interface delivering the variable data. This is referenced as "**Aircraft Registration**´ within the rest of this section.*

2.2.24.6.2 Register 20_{16} -- Data Requirements

2.2.24.6.2.1 Data Selection Priority

Use of Aircraft Identification or Aircraft Registration Data in Register 20_{16} **shall** comply with the following guidelines:

Note: *Aircraft Registration Data may also be used in Register 08_{16} when Extended Squitter is implemented. As such, the requirements inferred below will also apply to Register 08_{16} when Extended Squitter is implemented.*

a. If Aircraft Identification data is available at anytime during unit operation, then Aircraft identification data **shall** be inserted into the character subfields of Register 20_{16}.

Note: *Aircraft Identification data is normally provided via ARINC Labels 233 -through- 237 or by Label 360 for block transfer data. Available data means that the status of the data is not set to No Computed Data (NCD).*

b. If Aircraft Identification data is NOT available then Aircraft Registration, if available, **shall** be inserted into the character subfields of Register 20_{16}.

Note: *If the transponder has no input from the Aircraft installation that could be used to service Register 20_{16}, then the Register 20_{16} Character subfields are set to ZERO (0) and Register 10_{16} (Data Link Capability Report) bit 33 is set to ZERO (0).*

c. If Aircraft Identification data has been entered into Register 20_{16} and then becomes NOT available, then the character subfields of the registers **shall** be set to all ZERO's.

d. In all of the above cases, encoding of the character subfields in Register 20_{16} **shall** conform to the following:

(1). All characters will be left justified prior to encoding the Character fields.

(2). Characters will be coded consecutively without intervening SPACE codes.

(3). Any unused character spaces at the end of the subfield should contain a SPACE character code.

(4). Any extra characters **shall** be truncated.

2.2.24.6.3 Register 20_{16} – Aircraft Identification Update Rates

a. The minimum update interval at which Register 20_{16} **shall** be reloaded with valid data is **5.0** seconds.

Note: *Effectively, Register 20_{16} must be updated every **5.0** seconds or sooner.*

b. If Register 20_{16} cannot be updated within a **10.0** second timeframe (e.g., twice the specified minimum update interval of **5.0** seconds), then:

(1). The contents of the character field of Register 20_{16} **shall** be set to ZERO (0).

(2). Bit **7** of Register 17_{16} **shall** be set to ZERO (0).

(3). Bit **33** of Register 10_{16} **shall** be set to ZERO (0). (see §2.2.24.3.2.4.)

(4). Bit **25** of Register 18_{16} **shall** not change state if Register 20_{16} has been properly serviced during the power-on cycle. If Register 20_{16} has not been properly serviced during the power-on cycle, then bit 25 of Register 18_{16} must be verified as being set to ZERO (0) (see §2.2.24.5.1 and 2.2.24.5.2.4).

c. The time between availability of data that causes a change in Register 20_{16} and the time that the change is made to Register 20_{16} **shall** be less than the minimum update interval specified as **5.0** seconds.

Note: *The time between establishing availability of data and the time of updating Register 20_{16} should be minimized (e.g., data latency should be minimized).*

2.2.24.6.4 Aircraft Identification Declaration of Capability

Aircraft Identification Capability of the transponder **shall** be declared as provided in the following subsections.

2.2.24.6.4.1 In Register 10_{16} – Data Link Capability Report

Correct servicing of the character fields of Register 20_{16} **shall** be reported in Register 10_{16} via bit 33 as defined in §2.2.24.3.2.4.

2.2.24.6.4.2 In Register 17_{16} – Common Usage GICB Capability Report

Correct servicing of the character fields of Register 20_{16} **shall** be reported in Register 17_{16} via bit **33** as defined in §2.2.24.4.2.1.

2.2.24.6.4.3 In Register 18_{16} – Mode S Specific Services Capability Report

Correct servicing of the character fields of Register 20_{16} **shall** be reported in Register 18_{16} via bit **25** as defined in §2.2.24.5.2.4.

2.2.24.6.5 Aircraft Identification Change Reporting

If the aircraft identification reported in the "AIS" subfield is changed, then the transponder **shall** report the new aircraft identification in accordance with §2.2.19.1.13.e by use of the Comm-B Broadcast Message protocol (see §2.2.19.1.12.4.1).

2.2.24.7 Register 21_{16} – Aircraft Registration (Optional)

Note: *Elementary Surveillance does not require that Register 21_{16} be serviced. However, if Register 21_{16} is serviced, the following subparagraphs need to be complied with.*

2.2.24.7.1 Purpose and Definition

The Mode-S transponder **shall** format Register 21_{16} as defined in Appendix B, Table B-3-33 and associated notes.

2.2.24.7.2 Register 21_{16} – Data Requirements

a. If valid Aircraft Registration data is available, then the data **shall** be used to fill the Characters in Register 21_{16}, "Aircraft and Airline Registration Markings" as shown in Appendix B, Table B-3-33.

   Note: *Aircraft Registration data is normally provided via ARINC Labels 301 -through- 303 or by Label 360 for block transfer data. Available data means that the status of the data is not set to No Computed Data (NCD).*

b. There is currently no method to provide the transponder with ICAO Airline Registration marking. Therefore, bits **44** -through- **56** of Register 21_{16} **shall** be set to zero.

c. When Register 21_{16} is being serviced with Aircraft Registration data, then Register 21_{16} **shall** be available for GICB Extraction as per §2.2.24.1.

2.2.24.7.3 Register 21_{16} – Update Rates

a. The minimum update interval at which Register 21_{16} **shall** be reloaded with valid data is **15.0** seconds.

   Note: *Register 21_{16} is updated every **15.0** seconds or sooner.*

b. If Register 21_{16} cannot be updated within a **30.0** second timeframe (e.g., twice the specified minimum update interval of **15.0** seconds), then the contents of Register 21_{16} **shall** be set to ZERO and:

(1). Bit 24 of Register 18_{16} **shall** not change state if Register 21_{16} has been properly serviced **since power-on** of the transponder. If Register 21_{16} has not been properly serviced **since power-on** of the transponder, then bit 24 of Register 18_{16} must be verified as being set to ZERO.

c. The time between availability of data that causes a change in Register 21_{16} and the time that the change is made to Register 21_{16} **shall** be less than the minimum update interval specified as 15.0 seconds.

Note: *The time between establishing availability of data and the time of updating Register 21_{16} should be minimized (e.g., data latency should be minimized).*

2.2.24.7.4 Register 21_{16} – Declaration of Capability

2.2.24.7.4.1 In Register 17_{16} – Common Usage GICB Capability Report

Correct servicing of at least one field in Register 21_{16} **shall** be reported in Register 17_{16} via bit 8 as defined in §2.2.24.4.2.2.

2.2.24.7.4.2 In Register 18_{16} –Mode S Specific Services Capability Report

Correct servicing of at least one field in Register 21_{16} **shall** be reported in Register 18_{16} via bit 24 as defined in §2.2.24.5.2.5.

2.2.25 Enhanced Surveillance (EHS) Compliant Transponder

The EUROCONTROL ATM 2000+ Strategy confirmed that Enhanced Surveillance (EHS) was essential to safely enable additional traffic growth.

This section contains requirements on Mode S transponders required to support EHS.

The Enhanced Surveillance application entails the use of eight Downlink Aircraft Parameters (DAPs) for initial implementation, as follows:

a. Magnetic Heading

b. Indicated Airspeed and/or Mach No.

c. Vertical Rate (climb/descend)

d. MCP/FCU Selected Altitude

e. Ground Speed

f. Roll Angle

g. Track Angle Rate (or True Airspeed if Track Angle Rate is not available)

h. True Track Angle

These DAPS are embedded in three transponder registers (40_{16}, 50_{16}, 60_{16}).

In addition to those three registers, the Enhanced Surveillance application uses a number of capability report registers to assess the real time ability of the aircraft to transmit DAPs. The format requirements related to the Enhanced Surveillance application for these capability registers are defined in §2.2.25.1 -through- §2.2.25.4.

The Enhanced Surveillance application presents the following benefits:

i. The provision of actual aircraft derived data, such as Magnetic Heading, Air Speed, Selected Altitude and Vertical Rate, enables controllers to reduce the radio telephony (RT) workload and better assess the separation situations.

j. EHS enables Monitoring Tools and Safety Nets, which work on actual data, to be implemented or improved (eg. Short Term Conflict Alert) which, in turn, will allow safety levels to be maintained or improved despite the increase in traffic levels.

Transponder capable of supporting EHS must:

k. support ELS as defined in §2.2.24.

l. at least be able to provide data in register 40_{16}, 50_{16}, 60_{16}.

m. support capability reporting in CA and register 10_{16} to $1F_{16}$.

Note 1: *Servicing register $5F_{16}$ is not mandatory.*

Note 2: *For the remaining subsections of this section, servicing of a field or subfield in a register implies that valid data has been received at a sufficient rate to meet the update requirements specified for the given register in Appendix B.*

2.2.25.1 Register 10_{16} – Data Link Capability Report

2.2.25.1.1 Purpose and Definition

Register 10_{16} **shall** be formatted as specified in Appendix B table B-3-16.

Note: *The following paragraphs detail the minimum requirement for Enhanced Surveillance. The other fields need to be managed according to the additional capabilities supported by the transponder.*

2.2.25.1.2 Data Requirements

2.2.25.1.2.1 Bit 1 –to- 8, BDS Code

Bits 1 –through- 8 of Register 10_{16} are defined in Elementary Surveillance (ELS) Compliant Transponder §2.2.24.3.2.1.

2.2.25.1.2.2 Bit 17 –to- 23, Mode S Subnetwork Version Number

Bit 17 –through- 23 (Mode S Subnetwork Version) of Register 10_{16} are defined in Elementary Surveillance (ELS) Compliant Transponder §2.2.24.3.2.2.

2.2.25.1.2.3 Bit 25, Mode S Specific Services Capability

a. Register 10_{16} (Data Link Capability Report) bit 25 **shall** be set to ONE (1) if the transponder is receiving any data from the Aircraft installation with which to service Registers $1D_{16}$ –through- $1F_{16}$, 40_{16}, 50_{16}, $5F_{16}$ (Optional) or 60_{16} (or other registers) as provided in the respective sections for each register in this document.

Note 1: *Registers $1D_{16}$ –through- $1F_{16}$ are included above in order to provide for possible declaration of capability to provide Dataflash or other Mode Specific Protocol capability.*

Note 2: *This requirement is not established by the transponder LRU own capability to service Registers $1D_{16}$ -through- $1F_{16}$, 40_{16}, 50_{16}, $5F_{16}$* ***(Optional)*** *or 60_{16}. Rather, it is established by the Aircraft installation capability to provide the transponder with the appropriate data with which to then service Registers $1D_{16}$ -through- $1F_{16}$, 40_{16}, 50_{16}, $5F_{16}$* ***(Optional)*** *or 60_{16}.*

b. Register 10_{16} (Data Link Capability Report) bit 25 **shall** be set to ZERO (0) if the transponder is receiving no data from the Aircraft installation that could be used to properly service either Registers $1D_{16}$ -through- $1F_{16}$, 40_{16}, 50_{16}, $5F_{16}$ (Optional), 60_{16} or any other registers other than 02_{16}, 03_{16}, 04_{16}, 10_{16}, 17_{16} – through- $1C_{16}$, 20_{16} and 30_{16}.

c. When bit 25 is set to ONE (1), it **shall** indicate that at least one Mode S Specific Service is supported.

Note: *Mode S Specific Service refers to the servicing of registers other than GICB services related to Registers 02_{16}, 03_{16}, 04_{16}, 10_{16}, 17_{16} -through- $1C_{16}$, 20_{16} and 30_{16}.*

2.2.25.1.2.4 Bit 25, Surveillance Identifier Code (SI)

Bit 35 of Register 10_{16} is set to ONE (1) as defined in Elementary Surveillance (ELS) Compliant Transponder §2.2.24.3.2.5.

2.2.25.1.2.5 Bit 36, Common Usage GICB Capability Report

Bit 36 of Register 10_{16} is managed as specified in Elementary Surveillance (ELS) Compliant Transponder §2.2.24.3.2.6.

2.2.25.1.3 Minimum Update Interval of Register 10_{16}

a. The minimum update interval at which Register 10_{16} **shall** be reloaded with valid data is **≤4.0** seconds.

Note: *Effectively, Register 10_{16} must be updated every 4.0 seconds or sooner.*

b. Register 10_{16} **shall** be updated within one second of the data changing and at least every four seconds thereafter.

c. If a particular data field in Register 10_{16} cannot be updated within **8.0** seconds (e.g., twice the specified minimum update interval of **≤4.0** seconds), then the status bit (if specified for that field) **shall** indicate that the data in that field is invalid and the data field **shall** be ZEROed.

2.2.25.1.4 Change Reporting

When register 10_{16} is changed, then the register **shall** be broadcast as described in §2.2.19.1.12.8.

2.2.25.2 Register 17_{16}—Common Usage GICB Capability Report

2.2.25.2.1 Register 17_{16} – Purpose and Definition

The Mode-S transponder **shall** format Register 17_{16} as defined in Appendix B, Table B-3-23 and associated notes.

The Elementary Surveillance (ELS) Compliant Transponder manages the following bits in Register 17_{16}.

a. Bit 7 to indicate servicing of Register 20_{16} Aircraft Identification as defined in Elementary Surveillance (ELS) Compliant Transponder §2.2.24.4.2.1.

b. Bit 8 to indicate servicing of Optional Register 21_{16} Aircraft Registration as defined in Elementary Surveillance (ELS) Compliant Transponder §2.2.24.4.2.2.

c. Bit 9 to indicate whether the aircraft installation is servicing any part of Register 40_{16} as defined in §2.2.25.4.2.2.

d. Bit 16 to indicate whether the aircraft installation is servicing any part of Register 50_{16} as defined in §2.2.25.4.2.2.

e. Bit 24 to indicate whether the aircraft installation is servicing any part of Register 60_{16} as defined in §2.2.25.4.2.2.

2.2.25.2.2 Enhanced Surveillance (EHS) Servicing Requirements

2.2.25.2.2.1 Required Servicing of Register 17_{16} Associated with Register 20_{16}

Refer to §2.2.24.4.2.1 where requirements have previously been provided for servicing Register 20_{16} as part of the Elementary Surveillance (ELS) Compliant Transponder.

2.2.25.2.2.2 Required Servicing of Register 17_{16} Associated with Optional Register 21_{16}

Refer to §2.2.24.4.2.2 where requirements have previously been provided for servicing Register 21_{16} as part of the Elementary Surveillance (ELS) Compliant Transponder.

2.2.25.2.2.3 Required Servicing of Register 17_{16} Associated with Register 40_{16}

a. Register 17_{16} bit 9 **shall** be set to ONE (1) if the transponder is servicing either MCP/FCU Selected Altitude, FMS Selected Altitude, Barometric Pressure Setting, FMS Vertical Mode (MCP/FCU Mode Bits), or Target Altitude Source data in Register 40_{16}.

Note 1: *This requirement is not established by the transponder LRU own capability to service Register 40_{16}. Rather, it is established by the Aircraft installation capability to provide the transponder with the appropriate data with which to then service Register 40_{16}.*

Note 2: *FMS Vertical Mode data refers to data used to establish bits 48 -through- 51 of Register 40_{16}.*

Note 3: *Target Altitude Source data refers to data used to establish bits 54 -through- 56 of Register 40_{16}.*

b. Register 17_{16} bit 9 **shall** be set to ZERO (0) if the transponder is receiving no data from the Aircraft installation that could be used to properly service Register 40_{16}.

2.2.25.2.2.4 Required Servicing of Register 17_{16} Associated with Register 50_{16}

a. Register 17_{16} bit 16 **shall** be set to ONE (1) if the transponder is servicing either Roll Angle, True Track Angle, Ground Speed, Track Angle Rate, or True Airspeed data in Register 50_{16}.

Note: *This requirement is not established by the transponder LRU own capability to service Register 50_{16}. Rather, it is established by the Aircraft installation capability to provide the transponder with the appropriate data with which to then service Register 50_{16}.*

b. Register 17_{16} bit 16 **shall** be set to ZERO (0) if the transponder is receiving no data from the Aircraft installation that could be used to properly service Register 50_{16}.

2.2.25.2.2.5 Required Servicing of Register 17_{16} Associated with Optional Register $5F_{16}$

Note: *Enhanced Surveillance does not require that Register $5F_{16}$ be serviced. However, servicing of Register $5F_{16}$* ***is implicitly*** *required when servicing Register 40_{16} in ICAO Doc. 9871 and Appendix B. Therefore,* ***if*** *Register $5F_{16}$ is serviced, the following subparagraphs need to be complied with.*

a. Register 17_{16} bit 23 **shall** be set to ONE (1) if the transponder is receiving MCP/FCU Selected Altitude, FMS Selected Altitude, Barometric Pressure Setting, of FMS Vertical Mode (MCP/FCU Mode Bits) necessary to update Register 40_{16} (see §2.2.25.5) which then requires that Register $5F_{16}$ be updated in accordance with §2.2.25.7.

Note: *This requirement is not established by the transponder LRU own capability to service Register $5F_{16}$. Rather, it is established by the Aircraft installation capability to provide the transponder with the appropriate data with which to then service Register $5F_{16}$.*

b. Register 17_{16} bit 23 **shall** be set to ZERO (0) if the transponder is receiving no data from the Aircraft installation that could be used to properly service Register $5F_{16}$.

2.2.25.2.2.6 Required Servicing of Register 17_{16} Associated with Register 60_{16}

a. Register 17_{16} bit 24 **shall** be set to ONE (1) if the transponder is servicing either Magnetic Heading, Indicated Airspeed, Mach, Barometric Altitude Rate, or Inertial Vertical Velocity data in Register 60_{16}.

Note: *This requirement is not established by the transponder LRU own capability to service Register 60_{16}. Rather, it is established by the Aircraft installation capability to provide the transponder with the appropriate data with which to then service Register 60_{16}.*

b. Register 17_{16} bit 24 **shall** be set to ZERO (0) if the transponder is receiving no data from the Aircraft installation that could be used to properly service Register 60_{16}.

2.2.25.2.2.7 Minimum Update Interval of Register 17_{16}

a. The minimum update interval at which Register 17_{16} **shall** be reloaded with valid data is **5.0** seconds.

Note: *Effectively, Register 17_{16} must be updated at least once every 5.0 seconds.*

b. The time between availability of data that causes a change in Register 17_{16} and the time that the change is made to Register 17_{16} **shall** be less than the minimum update interval specified as **5.0** seconds.

c. If a particular data field in Register 17_{16} cannot be updated within **10.0** seconds (e.g., twice the specified minimum update interval of **5.0** seconds), then the status bit (if specified for that field) **shall** indicate that the data in that field is invalid and the data field **shall** be ZEROed.

2.2.25.2.3 Change Reporting

When Register 17_{16} is changed, bit 36 of Register 10_{16} is to be toggled as defined in §2.2.24.3.2.6.

2.2.25.3 Register 18_{16} –through- $1C_{16}$ Mode S Specific Services GICB Capability

2.2.25.3.1 Purpose and Definition

The Mode-S transponder **shall** format Register 18_{16} -through- $1C_{16}$ as defined in Appendix B, Table B-3-24 -through- Table B-3-28 and associated notes for Register 18_{16} -through- $1C_{16}$, respectively.

Note 1: *Registers 18_{16} to $1C_{16}$ are used to indicate the capability of the aircraft installation to provide data for each register i.e. the register or a part of the register is managed by the transponder and it is known that data can be received from the installation to fill this field.*

Note 2; *This is not established by the Transponder LRU own capability. Rather, it is established by the Aircraft installation capability to provide the transponder with the appropriate data with which to service the corresponding register. Once this capability is established it remains set until power-off of the transponder.*

Transponers that support Enhanced Surveillance (EHS) functions manage register 18_{16} as follows:

a. Register 18_{16} bit 41 to indicate that the installation has the capability to provide data in Register 10_{16}.

b. Register 18_{16} bit 34 to indicate that the installation has the capability to provide data in Register 17_{16}.

c. Register 18_{16} bit 33 to indicate that the installation has the capability to provide data in Register 18_{16}.

d. Register 18_{16} bit 32 to indicate that the installation has the capability to provide data in Register 19_{16}.

e. Register 18_{16} bit 25 to indicate that the installation has the capability to provide data in Register 20_{16}.

f. Register 18_{16} bit 24 to indicate that the installation has the capability to provide data in Register 21_{16} (Optional).

g. Register 19_{16} bit 49 to indicate that the installation has the capability to provide data in Register 40_{16}.

h. Register 19_{16} bit 33 to indicate that the installation has the capability to provide data in Register $5F_{16}$ **(Optional)**.

i. Register 19_{16} bit 18 to indicate that the installation has the capability to provide data in Register 60_{16}.

Note 3: *Although not a function of Elementary Surveillance, Register 18_{16} bit 9 is set when the transponder is interfaced with TCAS to indicate that the ACAS Active Resolution Advisory Register 30_{16} is supported.*

Note 4: *Combined Elementary and Enhanced Surveillance only require that Register 18_{16} and 19_{16} be serviced; Therefore, if no other transponder functions require the servicing of Register $1A_{16}$ –through- $1C_{16}$, these registers will be set to ALL ZERO.*

2.2.25.3.2 Enhanced Surveillance Capability Requirements

2.2.25.3.2.1 Required Servicing of Register 18_{16} Associated with Register 10_{16}

Refer to §2.2.24.5.2.1 where requirements have previously been provided for servicing Register 10_{16} as part of the Elementary Surveillance (ELS) Compliant Transponder.

2.2.25.3.2.2 Required Servicing of Register 18_{16} Associated with Register 17_{16}

Refer to §2.2.24.5.2.2 where requirements have previously been provided for servicing Register 17_{16} as part of the Elementary Surveillance (ELS) Compliant Transponder.

2.2.25.3.2.3 Required Servicing of Register 18_{16} Associated with Register 18_{16}

Refer to §2.2.24.5.2.3 where requirements have previously been provided for servicing Register 18_{16} as part of the Elementary Surveillance (ELS) Compliant Transponder.

2.2.25.3.2.4 Required Servicing of Register 18_{16} Associated with Register 19_{16}

a. Register 18_{16} bit 32 **shall** be set to ONE (1) if the transponder is required to service any part of Register 19_{16} as provided in §2.2.25.3.2.7 –through- §2.2.25.3.2.10.

Note: *This requirement is not established by the Transponder LRU own capability to service Register 19_{16}. Rather, it is established by the Aircraft installation capability to provide the transponder with the appropriate data of which processing would result in the need to update Register 19_{16}.*

b. Once Register 18_{16} bit 32 has been set to ONE (1) **since power-on** of the transponder, then it **shall** remain set to ONE (1) **until power-off** of the transponder.

c. Register 18_{16} bit 32 **shall** be set to ZERO (0) if the transponder receives no data from the Aircraft installation that could result in the need to service Register 19_{16} as provided in §2.2.25.3.2.6 -through- §2.2.25.3.2.9.

2.2.25.3.2.5 Required Servicing of Register 18_{16} Associated with Register 20_{16}

Refer to §2.2.24.5.2.4 where requirements have previously been provided for servicing Register 18_{16} as part of the Elementary Surveillance (ELS) Compliant Transponder.

2.2.25.3.2.6 Required Servicing of Register 18_{16} Associated with Register 21_{16} (Optional)

Refer to §2.2.24.5.2.5 where requirements have previously been provided for servicing Register 18_{16} as part of the Elementary Surveillance (ELS) Compliant Transponder.

2.2.25.3.2.7 Required Servicing of Register 19_{16} Associated with Register 40_{16}

a. Register 19_{16} bit 49 **shall** be set to ONE (1) if the transponder has received either MCP/FCU Selected Altitude, FMS Selected Altitude, Barometric Pressure Setting, FMS Vertical Mode (MCP/FCU Mode Bits), or Target Altitude Source data in the Aircraft Installation during the power-on cycle.

(Refer to Appendix B, Table B-3-64 for full definition of Register 40_{16}).

Note 1: *This requirement is not established by the Transponder LRU own capability to service Register 40_{16}. Rather, it is established by the Aircraft installation capability to provide the transponder with the appropriate data with which to then service Register 40_{16}.*

Note 2: *FMS Vertical Mode data refers to data used to establish bits 48 -through- 51 of Register 40_{16}.*

Note 3: *Target Altitude Source data refers to data used to establish bits 54 -through- 56 of Register 40_{16}.*

b. Once Register 19_{16} bit 49 has been set to ONE (1) **since power-on** of the transponder, then it **shall** remain set to ONE (1) **until power-off** of the transponder.

c. Register 19_{16} bit 49 **shall** be set to ZERO (0) if the transponder receives no data from the Aircraft installation that could be used to properly service Register 40_{16} during the power-on cycle.

2.2.25.3.2.8 Required Servicing of Register 19_{16} Associated with Register 50_{16}

a. Register 19_{16} bit 33 **shall** be set to ONE (1) if the transponder has received either Roll Angle, True Track Angle, Ground Speed, Track Angle Rate, or True Airspeed data in the Aircraft installation during the power-on cycle.

(Refer to Appendix B, Table B-3-80 for full definition of Register 50_{16})

Note: *This requirement is not established by the Transponder LRU own capability to service Register 50_{16}. Rather, it is established by the Aircraft installation capability to provide the transponder with the appropriate data with which to then service Register 50_{16}.*

b. Once Register 19_{16} bit 33 has been set to ONE (1) **since power-on** of the transponder, then it **shall** remain set to ONE (1) **until power-off** of the transponder.

c. Register 19_{16} bit 33 **shall** be set to ZERO (0) if the transponder receives no data from the Aircraft installation that could be used to properly service Register 50_{16} **since power-on** of the transponder.

2.2.25.3.2.9 Required Servicing of Register 19_{16} Associated with Optional Register $5F_{16}$

Note: *Enhanced Surveillance does not require that Register $5F_{16}$ be serviced. However, servicing of Register $5F_{16}$* ***is implicitly*** *required when servicing Register 40_{16} in ICAO Doc. 9871 and Appendix B. Therefore,* ***if*** *Register $5F_{16}$ is serviced, the following subparagraphs need to be complied with.*

a. Register 19_{16} bit 18 **shall** be set to ONE (1) if the transponder is required to service any part of Register $5F_{16}$ as provided in §2.2.25.6.

Note: *This requirement is not established by the Transponder LRU own capability to service Register $5F_{16}$. Rather, it is established by the Aircraft installation capability to provide the transponder with the appropriate data of which processing would result in the need to update Register $5F_{16}$.*

b. Once Register 19_{16} bit 18 has been set to ONE (1) **since power-on** of the transponder, then it **shall** remain set to ONE (1) **until power-off** of the transponder.

c. Register 19_{16} bit 18 **shall** be set to ZERO (0) if the transponder receives no data from the Aircraft installation that could result in the need to service Register $5F_{16}$ as provided in §2.2.25.7.

2.2.25.3.2.10 Required Servicing of Register 19_{16} Associated with Register 60_{16}

a. Register 19_{16} bit 17 **shall** be set to ONE (1) if the transponder has received either Magnetic Heading, Indicated Airspeed, Mach, Barometric Altitude Rate, or Inertial Vertical Velocity data in the Aircraft installation during the power-on cycle.

(Refer to Appendix B, Table B-3-96 for full definition of Register 60_{16})

Note: *This requirement is not established by the Transponder LRU own capability to service Register 60_{16}. Rather, it is established by the Aircraft installation capability to provide the transponder with the appropriate data with which to then service Register 60_{16}.*

b. Once Register 19_{16} bit 17 has been set to ONE (1) **since power-on** of the transponder, then it **shall** remain set to ONE (1) **until power-off** of the transponder.

c. Register 19_{16} bit 17 **shall** be set to ZERO (0) if the transponder receives no data from the Aircraft installation that could be used to properly service Register 60_{16} **since power-on** of the transponder.

2.2.25.3.3 Minimum Update Interval of Registers 18_{16} to $1C_{16}$

a. The minimum update interval at which Register 18_{16} and/or Register 19_{16} **shall** be reloaded with valid data is **5.0** seconds.

Note: *Effectively, Register 18_{16} and/or Register 19_{16} are updated at least once every **5.0** seconds.*

b. The time between availability of data that causes a change in Register 18_{16} and/or Register 19_{16} and the time that the change is made to Register 18_{16} and/or Register 19_{16} **shall** be less than the minimum update interval specified as **5.0** seconds.

c. The setting of bits in Register 18_{16} –to- $1C_{16}$ is static. If a bit has been set to ONE (1) in one of these registers since power-on of the transponder, then the bit **shall** remain set to ONE (1) until power-off of the transponder.

2.2.25.4 Register $1D_{16}$ to $1F_{16}$ Mode S Specific Services MSP Capability

a. Register $1D_{16}$ to $1F_{16}$**shall** be formatted as specified in Appendix B table B-3-24 to B2-28.

b. Although, servicing of Register $1D_{16}$ -through- $1F_{16}$ is not required by Enhanced Surveillance, the "MB" field of these registers **shall** be set to ALL ZEROs.

Note: *There is no formal requirement to implement data-flash however Mode S ground station may systematically extract register $1D_{16}$ to decide to extract a register using GICB protocol or using the data-flash application.*

2.2.25.5 Register 40_{16} – Selected Vertical Intention

2.2.25.5.1 Purpose and Definition

a) Transponders **shall** format Register **40_{16}** as defined in Appendix B, Table **B-3-64**.

b) The transponder **shall** comply with all constraints and requirements for servicing Register **40_{16}** that are provided with Table **B-3-64** in Appendix B.

2.2.25.5.2 Data Requirements

2.2.25.5.2.1 Selected Altitude from Altitude Control Panel

a. The transponder **shall** process Selected Altitude From Altitude Control Panel (Mode Control Panel/Flight Control Unit or equivalent equipment) data from on-board aircraft data sources as provided in Appendix B, Table B-3-64 of the Register 40_{16} definition table and format the data into bits 2 -through- 13 of the Register 40_{16} "MB" field as shown in that table.

b. The data loaded into the "MB" field **shall** be rounded so as to preserve accuracy of the source data within ±½ LSB.

c. Status Bit 1 **shall** be set to ONE (1) whenever valid data is available in bits 2 -through- 13.

d. Status Bit 1 **shall** be set to ZERO (0) whenever there is no valid data with which to fill bits 2 -through- 13.

e. Bits 2 -through- 13 **shall** be set to ZERO (0) whenever there is no valid data with which to fill the bits.

2.2.25.5.2.2 FMS Selected Altitude

a. The transponder **shall** process FMS Selected Altitude data from on-board aircraft data sources as provided in Appendix B, Table B-3-64 of the Register 40_{16} definition table and format the data into bits 15 -through- 26 of the Register 40_{16} "MB" field as shown in that table.

b. The data loaded into the "MB" field **shall** be rounded so as to preserve accuracy of the source data within ±½ LSB.

c. Status Bit 14 **shall** be set to ONE (1) whenever valid FMS Selected Altitude data is available in bits 15 -through- 26.

d. If FMS Selected Altitude data is not available for insertion into bits 15 -through- 26, Status Bit 14 **shall** be set to ZERO (0).

e. If FMS Selected Altitude data is not available for insertion into bits 15 -through- 26, bits 15 -through- 26 **shall** be set to ZERO (0).

2.2.25.5.2.3 Barometric Pressure Setting

a. The transponder **shall** process Barometric Pressure Setting data from on-board aircraft data sources as provided in Appendix B, Table B-3-64 of the Register 40_{16} definition table. Further processing of the input Barometric Pressure Setting data is needed as follows:

(1). Note that the Barometric Pressure Setting data received may be in BCD format and must be converted to Binary format prior to encoding data into Register 40_{16}. Tentative information regarding BCD to Binary Conversion and final mapping of the data into Register 40_{16} is provided in the following Note:

Note: *Barometric Pressure Setting BCD –to- BINARY Conversion Method Consider an input of 1085.9 millibars in BCD data.*

Multiply by 10 to give the BCD count of 0.1 increments needed to represent the input data.

Yields: 10859

10859/2	***=***	***5429***	***-***	***1***						
5429/2	***=***	***2714***	***-***	***1***						
2714/2	***=***	***1357***	***-***	***0***						
1357/2	***=***	***678***	***-***	***1***						
678/2	***=***	***339***	***-***	***0***						
339/2	***=***	***169***	***-***	***1***						
169/2	***=***	***84***	***-***	***1***						
84/2	***=***	***42***	***-***	***0***						
42/2	***=***	***21***	***-***	***0***						
21/2	***=***	***10***	***-***	***1***						
10/2	***=***	***5***	***-***	***0***						
5/2	***=***	***2***	***-***	***1***						
2/2	***=***	***1***	***-***	***0***						
½	***=***	***0***	***-***	***1***	***==***	***0010 1010 0110 1011 HEX***	***==***	***2A6B HEX***	***==***	***10859 Decimal***

Start:	***0001***	***0000***	***1000***	***0101***	***1001***		***10859***	***BCD***
Rotate R:	***0000***	***1000***	***0100***	***0010***	***1100***	***1***		
Add	***0000***	***1101***	***0000***	***0000***	***1101***			***Add "0D" Hex to each nibble that has the***
	0000	***0101***	***0100***	***0010***	***1001***		***05429***	***MSB of the nibble set to "1". Disregard the Carry***
Rotate R:	***0000***	***0010***	***1010***	***0001***	***0100***	***1***		
Add	***0000***	***0000***	***1101***	***0000***	***0000***			
	0000	***0010***	***0111***	***00001***	***0100***		***02714***	
Rotate R:	***0000***	***0001***	***0011***	***1000***	***1010***	***0***		
Add	***0000***	***0000***	***0000***	***1101***	***1101***			
	0000	***0001***	***0011***	***0101***	***0111***		***01357***	
Rotate R:	***0000***	***0000***	***1001***	***1010***	***1011***	***1***		
Add	***0000***	***0000***	***1101***	***1101***	***1101***			
	0000	***0000***	***0110***	***0111***	***1000***		***00678***	
Rotate R:	***0000***	***0000***	***0011***	***0011***	***1100***	***0***		
Add	***0000***	***0000***	***0000***	***0000***	***1101***			
	0000	***0000***	***0011***	***0011***	***1001***		***00339***	
Rotate R:	***0000***	***0000***	***0001***	***1001***	***1100***	***1***		
Add	***0000***	***0000***	***0000***	***1101***	***1101***			
	0000	***0000***	***0001***	***0110***	***1001***		***00169***	
Rotate R:	***0000***	***0000***	***0000***	***1011***	***0100***	***1***		
Add	***0000***	***0000***	***0000***	***1101***	***0000***			
	0000	***0000***	***0000***	***1000***	***0100***		***00084***	
Rotate R:	***0000***	***0000***	***0000***	***0100***	***0010***	***0***	***00042***	
Rotate R:	***0000***	***0000***	***0000***	***0010***	***0001***	***0***	***00021***	
Rotate R:	***0000***	***0000***	***0000***	***0001***	***0000***	***1***	***00010***	
Rotate R:	***0000***	***0000***	***0000***	***0000***	***1000***			
Add	***0000***	***0000***	***0000***	***0000***	***1101***			
	0000	***0000***	***0000***	***0000***	***0101***		***00005***	
Rotate R:	***0000***	***0000***	***0000***	***0000***	***0010***	***1***	***00002***	
Rotate R:	***0000***	***0000***	***0000***	***0000***	***00001***	***0***	***00001***	
Rotate R:	***0000***	***0000***	***0000***	***0000***	***0000***	***1***	***00000***	

Binary Equivalent == 0010 1010 0110 1011 = 2A6B Hex = 10859 Decimal

Next:

Establish Equivalent of 800.0 millibars having 0.1 resolution

Effectively, establish a count of 8000 millibars in binary: The value is 1F40 Hex

Establish 2's Complement of 1F40 Hex as E0C0 Hex.

Now, effectively subtract 8000 from the Binary Equivalent above as follows:

Binary Equivalent = 0010 1010 0110 101 = 2A6B Hex = 10859 Decimal

Add Neg. 800.0 mb = 1110 0000 1100 0000 = E0C0 Hex = -8000 millibars

Resultant Sum: = 0000 1011 0010 1011 = 0B2B Hex = 2859 Decimal

Map the Resultant Data into Bits 28 -through- 39 of Register 40_{16} as follows:

	MSB											**LSB**
Bit:	28	29	30	31	32	33	34	35	36	37	38	39
Data:	1	0	1	1	0	0	1	0	1	0	1	1

(2). Note that the encoding that is provided in Appendix B, Table B-3-64 Register 40_{16} for Barometric Pressure Setting represents the input Barometric Pressure Setting data MINUS 800 millibars (mb). See Appendix B, Table B-3-64, Register 40_{16} definition. Also, note that this 800 millibar correction has been taken into account in the BCD to BINARY conversion performed in the Note given in §2.2.25.5.2.3.a.(1).

b. The data loaded into the "MB" field **shall** be the Barometric Pressure Setting MINUS 800 millibars (mb) that has been converted to BINARY data in a manner that is consistent and equivalent with the BCD –to- BINARY conversion performed in the Note given in §2.2.25.5.2.3.a.(1).

c. Status Bit 27 **shall** be set to ONE (1) whenever valid data is available in bits 28 -through- 39, and the conditions given in §2.2.25.5.2.3.d are not applicable.

d. Status Bit 27 **shall** be set to ZERO (0) whenever:

(1). There is no valid data with which to fill bits 28 -through- 39.

(2). The input Barometric Pressure Setting data is less than 800 millibars (mb).

Note: *This would result in a negative Barometric Pressure Setting after subtracting 800 millibars (mb) and doing the BCD to BINARY conversion.*

(3). The input Barometric Pressure Setting data is greater than 1209.5 millibars (mb).

e. Bits 28 -through- 39 **shall** be set to ZERO (0) whenever there is no valid data with which to fill the bits.

2.2.25.5.2.4 FMS Vertical Mode Bits

Note: *FMS Vertical Mode bits refer to bits 48 -through- 51 of Register 40_{16}.*

2.2.25.5.2.4.1 Status of MCP / FCU Mode Bits (Bit 48)

Bit 48 **shall** indicate whether the mode bits (49, 50, and 51) are actively being populated (e.g., set) in Register 40_{16} in accordance with the following table:

Table 2.2.25.5.2.4.1: Status of MCP/FCU Mode Bots (Bit 48) Encoding

Bit 48	Meaning
0	No Mode Information Provided
1	Mode Information Deliberately Provided

Essentially, if information is provided to the transponder to set either bit 49, 50, or 51 to either "0" or "1," then Bit 48 **shall** be set to ONE (1) Otherwise, Bit 48 **shall** be set to ZERO (0).

2.2.25.5.2.4.2 Vertical Navigation Mode (Bit 49)

a. The transponder **shall** accept information from an appropriate interface that indicates whether or not the Vertical Navigation Mode is active.

b. The transponder **shall** set Bit 49 in accordance with the following table:

Table 2.2.25.5.2.4.2: Vertical Navigation Mode (Bit 49) Encoding

Bit 49	Meaning
0	VNAV Not Active
1	VNAV Active

c. If appropriate information is not available to indicate whether or not the Vertical Navigation Mode is active, then the transponder **shall** set Bit 49 to ZERO (0).

2.2.25.5.2.4.3 Altitude Hold (Bit 50)

a. The transponder **shall** accept information from an appropriate interface that indicates whether or not the Altitude Hold Mode is active.

b. The transponder **shall** set Bit 50 in accordance with the following table:

Table 2.2.25.5.2.4.3: Altitude Hold Mode (Bit 50) Encoding

Bit 50	Meaning
0	Altitude Hold Not Active
1	Altitude Hold Active

c. If appropriate information is not available to indicate whether or not the Altitude Hold Mode is active, then the transponder **shall** set Bit 50 to ZERO (0).

2.2.25.5.2.4.4 Approach Mode (Bit 51)

a. The transponder **shall** accept information from an appropriate interface that indicates whether or not the Approach Mode is active.

b. The transponder **shall** set Bit 51 in accordance to the following:

Table 2.2.25.5.2.4.4: Approach Mode (Bit 51) Encoding

Bit 51	Meaning
0	Approach Mode Not Active
1	Approach Mode Active

c. If appropriate information is not available to indicate whether or not the Approach Mode is active, then the transponder **shall** set Bit 51 to ZERO (0).

2.2.25.5.2.5 Reserved Bits (52, 53)

Bits 52 and 53 of Register 40_{16} "MB" field **shall** be set to ZERO (0).

2.2.25.5.2.6 Target Altitude Bits

2.2.25.5.2.6.1 Status of Target Altitude Source Bits (Bit 54)

Bit 54 **shall** indicate whether the Target Altitude Source bits (55 and 56) are actively being populated (e.g., set) in Register 40_{16} in accordance with the following table:

Table 2.2.25.5.2.6.1: Status of Target Altitude Source Bits (Bit 54) Encoding

Bit 48	Meaning
0	No Source Information Provided
1	Source Information Deliberately Provided

Essentially, if information is provided to the transponder to set either bit 55 or 56 (or both) to either "0" or "1", then Bit 54 **shall** be set to ONE (1). Otherwise, Bit 54 **shall** be set to ZERO (0).

2.2.25.5.2.6.2 Target Altitude Source Bits (55, 56)

a. The transponder **shall** accept information from an appropriate interface that indicates the origin of the intended aircraft target altitude in accordance with the following table:

Table 2.2.25.5.2.6.2: Target Altitude Source (Bit 55, 56) Encoding

Bit 55, 56	Meaning
0 0	Unknown
0 1	Aircraft Altitude
1 0	FCU / MCP Selected Altitude
1 1	FMS Selected Altitude

b. Alternatively, the transponder may accept information from an appropriate interface or source and use such information to determine the encoding of bits 55, 56 in accordance with the table provided in §2.2.25.4.2.6.2.a.

c. If appropriate information is not available to establish the encoding given in either §2.2.25.4.2.6.2.a. or §2.2.24.4.2.6.2.b, then bits 55 and 56 of Register 40_{16} "MB" field **shall** be set to ZERO (0).

2.2.25.5.3 Minimum Update Interval of Register 40_{16}

a. The minimum update interval at which Register 40_{16} **shall** be reloaded with valid data is **1.0** second.

Note: *Register 40_{16} is updated at least once every **1.0** seconds.*

b. The time between availability of data that causes a change in Register 40_{16} and the time that the change is made to Register 40_{16} **shall** be less than the minimum update interval specified as **1.0** seconds.

c. If Altitude Control Panel (MCP /FCU) Selected Altitude in Register 40_{16} "MB" field bits 2 -through- 13 cannot be updated with valid data within **2.0** seconds (e.g., twice the specified minimum update interval of **1.0** seconds), then Status Bit 1 **shall** be set to ZERO (0) and bits 2 -through- 13 **shall** be set to ZERO (0).

d. If FMS Selected Altitude in Register 40_{16} "MB" field bits 15 -through- 26 cannot be updated with valid data within **2.0** seconds (e.g., twice the specified minimum

update interval of **1.0** seconds), then Status Bit 14 **shall** be set to ZERO (0) and bits 15 -through- 26 **shall** be set to ZERO (0).

e. If Barometric Pressure Setting in Register 40_{16} "MB" field bits 28 -through- 39 cannot be updated with valid data within **2.0** seconds (e.g., twice the specified minimum update interval of **1.0** seconds) then Status Bit 27 **shall** be set to ZERO (0) and bits 28 -through- 39 **shall** be set to ZERO (0).

f. If the FMS Vertical Mode Bits in Register 40_{16} "MB" field bits 48 -through- 51 cannot be updated with valid data within **2.0** seconds (e.g., twice the specified minimum update interval of **1.0** seconds), then bits 48 -through- 51 **shall** be set to ZERO (0).

g. If the Target Altitude Bits in Register 40_{16} "MB" field bits 54 -through- 56 cannot be updated with valid data within **2.0** seconds (e.g., twice the specified minimum update interval of **1.0** seconds), then bits 54 -through- 56 **shall** be set to ZERO (0).

2.2.25.6 Register 50_{16} – Track and Turn Report

2.2.25.6.1 Purpose and Introduction

a. Transponders **shall** formatter Register 50_{16} as defined in Appendix B, Table B-3-80.

b. The transponder **shall** comply with all constraints and requirements for servicing Register 50_{16} that are provided in Appendix B, Table B-3-80.

2.2.25.6.2 Register 50_{16} – Data Requirements

2.2.25.6.2.1 Roll Angle

a. The transponder **shall** process Roll Angle data from on-board aircraft data sources as provided in Appendix B, Table B-3-80 of the Register 50_{16} definition table and format the data into bits 2 -through- 11 of the Register 50_{16} "MB" field as shown in that table.

b. Bits 2 –through- 12 **shall** be encoded using two's complement coding.

c. The data loaded into the "MB" field **shall** be rounded so as to preserve accuracy of the source data within ±½ LSB.

d. Status Bit 1 **shall** be set to ONE (1) whenever valid data is available in bits 2 -through- 11.

e. Status Bit 1 **shall** be set to ZERO (0) whenever there is no valid data with which to fill bits 2 -through- 11.

f. Bits 2 –through- 11 **shall** be set to ZERO (0) whenever there is no valid data with which to fill the bits.

2.2.25.6.2.2 True Track Angle

a. The transponder **shall** process True Track Angle data from on-board aircraft data sources as provided in Appendix B, Table B-3-80 of the Register 50_{16} definition table and format the data into bits 13 -through- 23 of the Register 50_{16} "MB" field as shown in that table.

b. Bits 13 –through- 23 **shall** be encoded using two's complement coding.

c. The data loaded into the "MB" field **shall** be rounded so as to preserve accuracy of the source data within ±½ LSB.

d. Status Bit 12 **shall** be set to ONE (1) whenever valid data is available in bits 13 -through- 23.

e. Status Bit 12 **shall** be set to ZERO (0) whenever there is no valid data with which to fill bits 13 -through- 23.

f. Bits 13 -through- 23 **shall** be set to ZERO (0) whenever there is no valid data with which to fill the bits.

2.2.25.6.2.3 Ground Speed

a. The transponder **shall** process Ground Speed data from on-board aircraft data sources as provided in Appendix B, Table B-3-80 of the Register 50_{16} definition table and format the data into bits 25 -through- 34 of the Register 50_{16} "MB" field as shown in that table.

b. The data loaded into the "MB" field **shall** be rounded so as to preserve accuracy of the source data within ±½ LSB.

c. Status Bit 24 **shall** be set to ONE (1) whenever valid data is available in bits 25 -through- 34.

d. Status Bit 24 **shall** be set to ZERO (0) whenever there is no valid data with which to fill bits 25 -through- 34.

e. Bits 25 –through- 34 **shall** be set to ZERO (0) whenever there is no valid data with which to fill the bits.

2.2.25.6.2.4 Track Angle Rate

a. The transponder **shall** process Track Angle Rate data from on-board aircraft data sources as provided in Appendix B, Table B-3-80 of the Register 50_{16} definition table and format the data into bits 36 -through- 45 of the Register 50_{16} "MB" field as shown in that table.

b. Bits 36 –through- 45 shall be encoded using two's complement coding.

c. The data loaded into the "MB" field **shall** be rounded so as to preserve accuracy of the source data within ±½ LSB.

d. Status Bit 35 **shall** be set to ONE (1) whenever valid data is available in bits 36 -through- 45.

e. Status Bit 35 **shall** be set to ZERO (0) whenever there is no valid data with which to fill bits 36 -through- 45.

f. Bits 36 -through- 45 **shall** be set to ZERO (0) whenever there is no valid data with which to fill the bits.

2.2.25.6.2.5 True Airspeed (TAS)

a. The transponder **shall** process True Airspeed (TAS) data from on-board aircraft data sources as provided in Appendix B, Table B-3-80 of the Register 50_{16} definition table and format the data into bits 47 -through- 56 of the Register 50_{16} "MB" field as shown in that table.

b. The data loaded into the "MB" field **shall** be rounded so as to preserve accuracy of the source data within ±½ LSB.

c. Status Bit 46 **shall** be set to ONE (1) whenever valid data is available in bits 47 -through- 56.

d. Status Bit 46 **shall** be set to ZERO (0) whenever there is no valid data with which to fill bits 47 -through- 56.

e. Bits 47 –through- 56 **shall** be set to ZERO (0) whenever there is no valid data with which to fill the bits.

2.2.25.6.3 Minimum Update Interval of Register 50_{16}

a. The minimum update interval at which Register 50_{16} **shall** be reloaded with valid data is **1.3** seconds.

Note: *Register 50_{16}* ***is*** *updated at least once every* ***1.3*** *seconds.*

b. The time between availability of data that causes a change in Register 50_{16} and the time that the change is made to Register 50_{16} **shall** be less than the minimum update interval specified as 1.3 seconds.

c. If Roll Angle data in Register 50_{16} "MB" field bits 2 -through- 11 cannot be updated with valid data within 2.6 seconds (e.g., twice the specified minimum update interval of 1.3 seconds) then Status Bit 1 **shall** be set to ZERO (0) and bits 2 -through- 11 **shall** be set to ZERO (0).

d. If True Track Angle data in Register 50_{16} "MB" field bits 13 -through- 23 cannot be updated with valid data within 2.6 seconds (e.g., twice the specified minimum update interval of 1.3 seconds), then Status Bit 12 **shall** be set to ZERO (0) and bits 13 -through- 23 **shall** be set to ZERO (0).

e. If Ground Speed data in Register 50_{16} "MB" field bits 25 -through- 34 cannot be updated with valid data within 2.6 seconds (e.g., twice the specified minimum update interval of 1.3 seconds) then Status Bit 24 **shall** be set to ZERO (0) and bits 25 -through- 34 **shall** be set to ZERO (0).

f. If Track Angle Rate data in Register 50_{16} "MB" field bits 36 -through- 45 cannot be updated with valid data within 2.6 seconds (e.g., twice the specified minimum update interval of 1.3 seconds) then Status Bit 35 **shall** be set to ZERO (0) and bits 36 -through- 45 **shall** be set to ZERO (0).

g. If True Airspeed (TAS) data in Register 50_{16} "MB" field bits 47 -through- 56 cannot be updated with valid data within 2.6 seconds (e.g., twice the specified minimum update interval of 1.3 seconds) then Status Bit 46 **shall** be set to ZERO (0) and bits 47 -through- 56 **shall** be set to ZERO (0).

2.2.25.7 Register $5F_{16}$ – Quasi-Static Parameter Monitoring (Optional)

Note: *Enhanced Surveillance does not require that Register $5F_{16}$ be serviced. However, servicing of Register $5F_{16}$* ***is implicitly*** *required when servicing Register 40_{16} in ICAO Doc. 9871 and Appendix B. Therefore,* ***if*** *Register $5F_{16}$ is serviced, the following subparagraphs need to be complied with.*

2.2.25.7.1 Purpose and Definition

a. Transponders **shall** format Register $5F_{16}$ as defined in Appendix B, Table B-3-80.

b. The transponder **shall** comply with all constraints and requirements for servicing Register $5F_{16}$ that are provided in Appendix B, Table B-3-95.

2.2.25.7.2 Enhanced Surveillance Servicing Requirements Associated with Register $5F_{16}$

2.2.25.7.2.1 Due to MCP / FCU Selected Altitude

a. Register $5F_{16}$ bits 1 – 2 **shall** be set to "00" whenever MCP / FCU Selected Altitude data is not available to set bits 1 -through- 13 of Register 40_{16}.

b. Whenever a change is detected in the MCP / FCU Selected Altitude data used to set bits 1 -through- 13 of Register 40_{16}, the Register $5F_{16}$ bits 1 – 2 **shall** be incremented by one.

Note 1: *Effectively, the decimal count is as follows: 1, 2, 3, -- 1, 2, 3, etc.*

Note 2: *The binary equivalent setting bits 1,2 is as follows: 01, 10, 11, -- 01, 10, 11, etc.*

2.2.25.7.2.2 Due to FMS Selected Altitude

a. Register $5F_{16}$ bits 23 – 24 **shall** be set to "00" whenever FMS Selected Altitude data is not available to set bits 14 -through- 26 of Register 40_{16}.

b. Whenever a change is detected in the FMS Selected Altitude data used to set bits 14 -through- 26 of Register 40_{16}, the Register $5F_{16}$ bits 23 – 24 **shall** be incremented by one.

Note 1: *Effectively, the decimal count is as follows: 1, 2, 3, -- 1, 2, 3, etc.*

Note 2: *The binary equivalent setting bits 23 – 24 is as follows: 01, 10, 11, -- 01, 10, 11, etc.*

2.2.25.7.2.3 Due to Barometric Pressure Setting

a. Register $5F_{16}$ bits 25 – 26 **shall** be set to "00" whenever Barometric Pressure Setting data is not available to set bits 27 -through- 39 of Register 40_{16}.

b. Whenever a change is detected in the Barometric Pressure Setting data used to set bits 27 -through- 39 of Register 4016, the Register $5F_{16}$ bits 25 – 26 **shall** be incremented by one.

Note 1: *Effectively, the decimal count is as follows: 1, 2, 3, -- 1, 2, 3, etc.*

Note 2: *The binary equivalent setting bits 25 – 26 is as follows: 01, 10, 11, -- 01, 10, 11, etc.*

2.2.25.7.2.4 Due to FMS Vertical Mode

a. Register $5F_{16}$ bits 17 – 18 **shall** be set to "00" whenever Barometric Pressure Setting data is not available to set bits 48 -through- 51 of Register 40_{16}.

b. Whenever a change is detected in the FMS Vertical Mode data used to set bits 48 -through- 51 of Register 40_{16}, the Register $5F_{16}$ bits 17 – 18 **shall** be incremented by one.

Note 1: *Effectively, the decimal count is as follows: 1, 2, 3, -- 1, 2, 3, etc.*

Note 2: *The binary equivalent setting bits 17 – 18 is as follows: 01, 10, 11, -- 01, 10, 11, etc.*

2.2.25.7.2.5 Other Register $5F_{16}$ Bits

Register $5F_{16}$ bits 3 -through- 16, 19 -through- 22, and 27 -through- 56 **shall** be set to ZERO (0) until such time that the respective parameters identified in Appendix B, Table B-3-95 are being monitored.

2.2.25.7.3 Minimum Update Interval of Register $5F_{16}$

a. The minimum update interval at which Register $5F_{16}$ **shall** be reloaded with valid data is **0.5** seconds.

Note: *Register $5F_{16}$ is updated at least once every **0.5** seconds.*

b. The time between availability of data that causes a change in Register $5F_{16}$ and the time that the change is made to Register $5F_{16}$ **shall** be less than the minimum update interval specified as **0.5** seconds.

c. If a particular data field in Register $5F_{16}$ cannot be updated within 1.0 seconds (e.g., twice the specified minimum update interval of 0.5. seconds, then the data field **shall** be ZEROed (i.e., binary "00")

2.2.25.8 Register 60_{16} – Heading and Speed Report

2.2.25.8.1 Purpose and Definition

a. Transponders **shall** format Register 60_{16} as defined in Appendix B, Table B-3-96.

b. The transponder **shall** comply with all constraints and requirements for servicing Register 60_{16} that are provided in Appendix B, Table B-3-96.

2.2.25.8.2 Data Requirements

2.2.25.8.2.1 Magnetic Heading

a. The transponder **shall** process Magnetic Heading data from on-board aircraft data sources as provided in Appendix B, Table B-3-96 of the Register 60_{16} definition table and format the data into bits 2 -through- 12 of the Register 60_{16} "MB" field as shown in that table.

b. Bits 2 –through- 12 **shall** be encoded using two's complement coding.

c. The data loaded into the "MB" field **shall** be rounded so as to preserve accuracy of the source data within ±½ LSB.

d. Status Bit 1 **shall** be set to ONE (1) whenever valid data is available in bits 2 -through- 12.

e. Status Bit 1 **shall** be set to ZERO (0) whenever there is no valid data with which to fill bits 2 -through- 12.

f. Bits 2 -through- 12 **shall** be set to ZERO (0) whenever there is no valid data with which to fill the bits.

2.2.25.8.2.2 Indicated Airspeed

a. The transponder **shall** process Indicated Airspeed data from on-board aircraft data sources as provided in Appendix B, Table B-3-96 of the Register 60_{16} definition table and format the data into bits 14 -through- 23 of the Register 60_{16} "MB" field as shown in that table.

b. The data loaded into the "MB" field **shall** be rounded so as to preserve accuracy of the source data within ±½ LSB.

c. Status Bit 13 **shall** be set to ONE (1) whenever valid data is available in bits 14 -through- 23.

d. Status Bit 13 **shall** be set to ZERO (0) whenever there is no valid data with which to fill bits 14 -through- 23.

e. Bits 14 -through- 23 **shall** be set to ZERO (0) whenever there is no valid data with which to fill the bits.

2.2.25.8.2.3 Mach

a. The transponder **shall** process Mach data from on-board aircraft data sources as provided in Appendix B, Table B-3-96 of the Register 60_{16} definition table and format the data into bits 25 -through- 34 of the Register 60_{16} "MB" field as shown in that table.

b. The data loaded into the "MB" field **shall** be rounded so as to preserve accuracy of the source data within ±½ LSB.

c. Status Bit 24 **shall** be set to ONE (1) whenever valid data is available in bits 25 -through- 34.

d. Status Bit 24 **shall** be set to ZERO (0) whenever there is no valid data with which to fill bits 25 -through- 34.

e. Bits 25 -through- 34 **shall** be set to ZERO (0) whenever there is no valid data with which to fill the bits.

2.2.25.8.2.4 Barometric Altitude Rate

a. The transponder **shall** process Barometric Altitude Rate data from on-board aircraft data sources as provided in Appendix B, Table B-3-96 of the Register 60_{16} definition table and format the data into bits 36 -through- 45 of the Register 60_{16} "MB" field as shown in that table.

b. Bits 36 –through- 45 **shall** be encoded using two's complement coding.

c. The data loaded into the "MB" field **shall** be rounded so as to preserve accuracy of the source data within ±½ LSB.

d. Status Bit 35 **shall** be set to ONE (1) whenever valid data is available in bits 36 -through- 45.

e. Status Bit 35 **shall** be set to ZERO (0) whenever there is no valid data with which to fill bits 36 -through- 45.

f. Bits 36 -through- 45 **shall** be set to ZERO (0) whenever there is no valid data with which to fill the bits.

2.2.25.8.2.5 Inertial Vertical Velocity

a. The transponder **shall** process Inertial Vertical Rate data from on-board aircraft data sources as provided in Appendix B, Table B-3-96 of the Register 60_16 definition table and format the data into bits 47 -through- 56 of the Register 60_{16} "MB" field as shown in that table.

b. Bits 47 –through- 56 **shall** be encoded using two's complement coding.

c. The data loaded into the "MB" field **shall** be rounded so as to preserve accuracy of the source data within ±½ LSB.

d. Status Bit 46 **shall** be set to ONE (1) whenever valid data is available in bits 47 -through- 56.

e. Status Bit 46 **shall** be set to ZERO (0) whenever there is no valid data with which to fill bits 47 -through- 56.

f. Bits 47 -through- 56 **shall** be set to ZERO (0) whenever there is no valid data with which to fill the bits.

2.2.25.8.3 Minimum Update Interval of Register 60_{16}

a. The minimum update interval at which Register 60_{16} **shall** be reloaded with valid data is **1.0** second.

*Note: Register 60_{16} is updated at least once every **1.0** second.*

b. The time between availability of data that causes a change in Register 60_{16} and the time that the change is made to Register 60_{16} **shall** be less than the minimum update interval specified as **1.0** seconds.

c. If Magnetic Heading data in Register 60_{16} "MB" field bits 2 -through- 12 cannot be updated with valid data within **2.0** seconds (e.g., twice the specified minimum update interval of **1.0** seconds) then Status Bit 1 **shall** be set to ZERO (0) and bits 2 -through- 12 **shall** be set to ZERO (0).

d. If Indicated Airspeed data in Register 60_{16} "MB" field bits 14 -through- 23 cannot be updated with valid data within **2.0** seconds (e.g., twice the specified minimum update interval of **1.0** seconds) then Status Bit 13 **shall** be set to ZERO (0) and bits 14 -through- 23 **shall** be set to ZERO (0).

e. If Mach data in Register 60_{16} "MB" field bits 25 -through- 34 cannot be updated with valid data within **2.0** seconds (e.g., twice the specified minimum update interval of **1.0** seconds) then Status Bit 24 **shall** be set to ZERO (0) and bits 25 -through- 34 **shall** be set to ZERO (0).

f. If Barometric Altitude Rate data in Register 60_{16} "MB" field bits 36 -through- 45 cannot be updated with valid data within **2.0** seconds (e.g., twice the specified minimum update interval of **1.0** seconds) then Status Bit 35 **shall** be set to ZERO (0) and bits 36 -through- 45 **shall** be set to ZERO (0).

g. If Inertial Vertical Rate data in Register 60_{16} "MB" field bits 47 -through- 56 cannot be updated with valid data within **2.0** seconds (e.g., twice the specified minimum update interval of **1.0** seconds) then Status Bit 46 **shall** be set to ZERO (0) and bits 47 -through- 56 **shall** be set to ZERO (0).

2.2.26 Generic Register XX_{16} Requirements

The following subsections provide generic requirements that **shall** be verified when transponders implement registers that have not been defined in detail in this document.

Note: *In the following subsections,* ***"ddd"*** *means the decimal equivalent* ***to*** XX_{16}. *For instance, for* 40_{16}, ***"ddd"*** = 64_{10} = 64.

2.2.26.1 Purpose and Definition

c) Transponders **shall** format Register $\mathbf{XX_{16}}$ as defined in Appendix B, Table **B-3-ddd** .

d) The transponder **shall** comply with all constraints and requirements for servicing Register $\mathbf{XX_{16}}$ that are provided with Table **B-3-ddd** in Appendix B.

2.2.26.2 Data Requirement

2.2.26.2.1 Data Field "y"

a. The transponder **shall** process data from on-board aircraft data sources as provided in Appendix B, Table B-3-**ddd** of Register $\mathbf{XX_{16}}$ definition table and format the data into field **"y"** of the Register $\mathbf{XX_{16}}$ "MB" field as shown in that table.

b. Field **"y" shall** be encoded using two's complement coding if it is a signed arithmetic field unless otherwise specified.

c. The data loaded into the "MB" field **shall** be rounded so as to preserve accuracy of the source data within ±1/2 LSB.

d. Status Bit of field **"y" shall** be set to ONE (1) whenever valid and up to date data (data not older than twice the maximum update interval specified in table B1-1 in Appendix B) is available in field **"y"**.

e. Status Bit b0 **shall** be set to ZERO (0) whenever there is no valid and up to date data with which to fill field **"y"**.

Note 1: *On an ARINC platform, when data is available in BCD and in binary, transponders will preferably use binary data rather than BCD data.*

Note 2: *When multiple sources of data are available for a given field "y", transponders will use the data source that is being used to manage the aircraft profile or the source selected by the flight crew. This general convention applies unless the highest integrity data is desired as in*

Automatic Dependent Surveillance – Broadcast (ADS-B). In such cases, the highest integrity source will be used for data.

2.2.26.3 Update Interval

RHS_Commentary: ***Change "Rate" to "Interval". Remove this commentary after making change to review copy.***

a. The minimum update interval at which a data field in a register **shall** be reloaded with valid data is defined for each register in table B-1 in Appendix B.

b. The transponder **shall** load valid data into the related transponder register as soon as it becomes available at the Mode S Specific Services entity.

c. The time between availability of data that causes a change in a data-field of a register and the time that the change is made to the register **shall** be less than the minimum update interval specified in table B-1 in Appendix B.

d. If a data-field field cannot be updated with valid data within twice the specified minimum update interval defined for the register or 2 seconds (whichever is the greater), then Status Bit (if specified) of the field **shall** be set to **"0"** (INVALID) and that data field **shall** be zeroed**.**

2.2.26.4 Service Reporting

a. The transponder **shall** report Mode-S Specific Services Capability Reports (installation capability) in transponder registers 18_{16} to$1C_{16}$.

b. The transponder **shall** update the common usage GICB Capability Report (transponder register 17_{16}) while periodically checking the availability of the related data.

c. The transponder **shall** promptly update the Data Link Capability Report (transponder register 10_{16} bit 25 and bit 36 and broadcast register 10_{16} in case of change in register 10_{16}.

END OF ELS/EHS/GENERIC___RHS

2.3 Equipment Performance – Environmental Conditions

The environmental tests and performance requirements described in this subsection provide a laboratory means of determining the overall performance characteristics of the equipment under conditions representative of those that may be encountered in actual aeronautical operations.

Some of the environmental tests contained in this subsection need not be performed unless the manufacturer wishes to qualify the equipment for that particular environmental condition. These tests are identified by the phrase "When Required." If the manufacturer wishes to qualify the equipment to these additional environmental conditions, then these "when required" tests **shall** be performed.

The test procedures applicable to a determination of equipment performance under environmental test conditions are contained in RTCA Document DO-160E, *Environmental Conditions and Test Procedures for Airborne Equipment*, December 9, 2004.

Some of the performance requirements in Subsections §2.1 and §2.2 are not tested by the test procedures herein. Moreover, not all tests are required to be done at each of the environmental conditions in RTCA/DO-160E. Judgment and experience have indicated that these particular performance parameters are not susceptible to certain environmental conditions and that the level of performance specified in Subsections §2.1 and §2.2 will not be measurably degraded by exposure to these environmental conditions.

The specified performance tests cover all classes of Mode S transponders. Only those tests that are applicable to the class of transponder being qualified need be done. Additional tests may have to be performed in order to determine performance of particular design requirements that are not specified in this document. It is the responsibility of the manufacturer to determine appropriate tests for these functions.

Specific transponder performance tests have been included in this section for use in conjunction with the environmental procedures of RTCA/DO-160E. These tests have been judiciously chosen as a subset of the transponder performance tests of Subsection §2.4. Normally, a MOPS document does not provide specific equipment performance tests to be used in conjunction with the environmental procedures of RTCA/DO-160E. However, there is a sufficiently large number of transponder performance tests in Subsection §2.4 that it would be impractical to repeat all of those tests in conjunction with all of the appropriate environmental procedures.

2.3.1 Environmental Test Conditions

Table 2.3.1.1 lists all of the environmental conditions and test procedures (hereafter referred to as environmental procedures) that are documented in RTCA/DO-160E. Table 2.3.1.2 lists the 13 sets of transponder performance tests that are specified in detail in this section and which are intended to be run subject to the various environmental procedures of RTCA/DO-160E. In order to simplify the process of relating the environmental procedures to the transponder performance tests, Table 2.3.1.1 divides the environmental procedures into groups. All of the procedures in a given group are carried out in conjunction with the same set of transponder performance tests. Using this approach, the environmental procedures fall into six groups. The environmental procedures that apply to all of the sets of transponder performance tests fall into group 1. Group 2 procedures apply to 8 of the sets of transponder performance tests. Groups 3, 4, and 5 apply to 4, 3 and 3 of the sets of

transponder performance tests, respectively. (Group 6, which applies to none of the transponder performance tests, includes only environmental procedures that are intended to determine the effect of the transponder on rack mounting hardware, compass needles, explosive gasses, and other RF hardware.)

Table 2.3.1.2 indicates which of the groups of environmental procedures is related to each set of transponder performance tests. Each transponder performance test **shall** be validated under all of the environmental procedures in the groups required for that test as indicated in Table 2.3.1.2.

Table 2.3.1.1: Environmental Test Groups

	ENVIRONMENTAL CONDITION	DO-160E Paragraph	GROUPS	REMARKS
4a	Temperature	4.5	1	
4b	Altitude	4.6.1	4	
4c	Decompression & Overpressure	4.6.2-4.6.3	4	When required
5	Temperature Variation	5.0	3	
6	Humidity	6.0	2	
7a	Operational Shock	7.2	2	When required
7b	Crash Safety	7.3	6	NO XPNDR TESTS
8	Vibration	8.0	3 & 1	3 during, 1 after
9	Explosion	9.0	6	NO XPNDR TESTS
10	Waterproofness	10.0	2	When required
11	Fluids Susceptibility	11.0	2	When required
12	Sand and Dust	12.0	2	When required
13	Fungus Resistance	13.0	2	When required
14	Salt Spray	14.0	2	When required
15	Magnetic Effect	15.0	6	NO XPNDR TESTS
16	Power Input	16.0	5	
	Momentary Interruptions All Others		3 & 2	3 during, 2 after
17	Voltage Spike	17.0	2	
18	Audio Freq. Conducted Susceptibility	18.0	1	
19	Induced Signal Susceptibility	19.0	1	
20	RF Susceptibility	20.0	1	
21	Emission of RF Energy	21.1	6	NO XPNDR TESTS
22	Lightning Induced Transient Susceptibility	22.0	3	
23	Lightning Direct Effects	23	3	When required

	ENVIRONMENTAL CONDITION	DO-160E Paragraph	GROUPS	REMARKS
24	Icing	24	2	When required
25	Electrostatic Discharge	25		2 after

Note: *Tests in Group 6 determine the effects of the transponder on other equipment (mounts, compass needles, explosive gasses, and other RF equipment) and therefore do not involve the transponder performance requirements of this document.*

Table 2.3.1.2: Performance Test Requirements During Environmental Tests

Test Procedure Paragraph	DESCRIPTION	REQUIRED ENVIRONMENT TEST GROUPS (See Table 2.3.1.1)					
		1	2	3	4	5	6
§2.3.2.1	Receiver Characteristics	x	x	x			
§2.3.2.2.1	Reply Transmission Frequency	x	x	x	x		
§2.3.2.2.2	RF Peak Power Output	x	x		x		
§2.3.2.2.3	Reply Rate Capability	x					
§2.3.2.3	Reply Pulse Characteristic	x					
§2.3.2.4	Side Lobe Suppression	x	x				
§2.3.2.5	Pulse Decoder Characteristic	x	x				
§2.3.2.6	Transponder Recovery & Desens.	x					
§2.3.2.7	Standard Interference Pulse	x					
§2.3.2.8	Undesired Replies	x		x		x	
§2.3.2.9	Self-Test and Monitors	x	x	x	x	x	
§2.3.2.10	Diversity Operation	x	x				
§2.3.2.11	Data Handling & Interfaces	x	x				
§2.3.2.12	Restoration of Power	x	x			x	

2.3.2 Detailed Environmental Test Procedures

The test procedures set forth below are considered satisfactory for use in determining equipment performance under environmental conditions. Although specific test procedures are cited, it is recognized that other methods may be preferred. These alternative procedures may be used if the manufacturer can show that they provide at least equivalent information. In such cases, the procedures cited herein should be used as one criterion in evaluating the acceptability of the alternative procedures. These transponder performance tests do not include specific pass fail criteria. It is intended that those criteria be obtained from the transponder performance requirements presented in the referenced paragraphs in §2.2.

2.3.2.1 Receiver Characteristics (§2.2.2)

Step 1 Sensitivity Variation with Frequency (§2.2.2.2)

Using a standard Mode A interrogation, interrogate the transponder at RF signal frequencies of 1029.8, 1030.0 and 1030.2 MHz. Determine the required maximum RF signal level at each frequency required to produce 90% reply efficiency.

Step 2 Sensitivity (§2.2.2.4.a.)

Interrogate the transponder with a standard Mode C ATCRBS/Mode S All-Call interrogation. Determine the minimum RF signal level required to produce 90% transponder reply efficiency.

Step 3 ATCRBS and ATCRBS/Mode S All-Call Dynamic Range (§2.2.2.4.f)

Interrogate the transponder with a standard Mode A interrogation at RF levels from MTL +3 dB to -21 dBm in approximately 5 equal steps. Determine reply ratio. Repeat for a standard Mode C ATCRBS/Mode S All-Call.

Step 4 ATCRBS/Mode S All-Call Low-Level Reply Ratio (§2.2.2.4.d.)

Interrogate the transponder with a standard Mode C ATCRBS/Mode S All-Call at an RF level of -81 dBm. Determine reply ratio.

Step 5 Mode S Sensitivity (§2.2.2.4.b.)

Interrogate the transponder with a Mode S Only All-Call interrogation at a standard rate with PR=0. Determine the minimum RF level to produce 90% proper reply efficiency.

Step 6 Mode S Dynamic Range (§2.2.2.4.c.)

Using the signal specified in Step 5, determine the reply efficiency for RF levels of MTL +3 dB, -50 dBm and -21 dBm.

Step 7 Mode S Low-Level Reply Ratio (§2.2.2.4.d.)

Using the signal specified in Step 5, determine reply efficiency for an RF level of -81 dBm.

2.3.2.2 Transmitter Characteristics (§2.2.3)

2.3.2.2.1 Reply Transmission Frequency (§2.2.3.1)

Interrogate the transponder with a standard Mode A interrogation. Use a 14 (7777) pulse reply group. Repeat with a standard Mode A ATCRBS/Mode S All-Call. Determine the reply frequency for both reply types.

2.3.2.2.2 RF Peak Power Output (§2.2.3.2)

Step 1 ATCRBS Power Output (§2.2.3.2)

Connect the equipment as shown in Figure 2-26. Set the transponder for a 14-pulse (7777) reply. Interrogate the transponder with a standard Mode A interrogation at 1200 interrogations per second or the maximum for which the transponder is designed and measure the single pulse having the least RF

power output. Determine that the power output meets the requirements of §2.2.3.2.

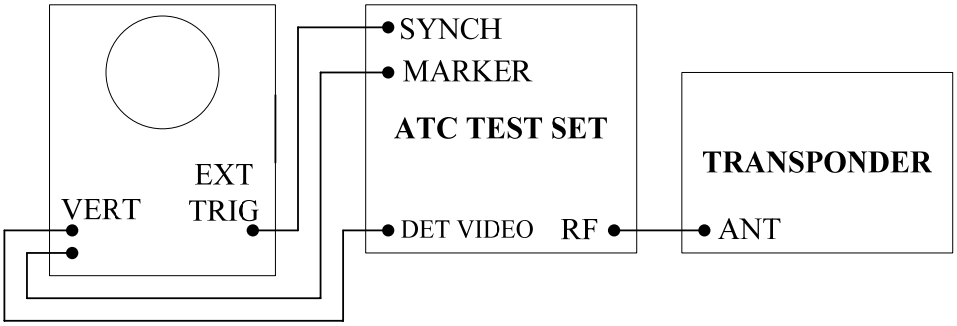

Figure 2-26: ?????

Step 2 Short Mode S Power Output (§2.2.3.2)

Repeat Step 1 with a standard Mode A ATCRBS/Mode S All-Call interrogation at the standard rate.

Step 3 Long Mode S Power Output

For transponders with long reply capability (Level 2 or above), repeat Step 1 with sixteen Mode S interrogations per second using any format and coding for which a long reply is required.

If the transponder is also Extended Squitter capable, then configure the transponder so that the transponder is transmitting the Extended Squitters (or an equivalent number of long replies) in addition to the sixteen replies.

Step 4 Extended Long Mode S Power Output

For transponders with extended reply capability (Level 4 or above), repeat Step 3, stimulating the maximum rate of long replies for which the transponder is designed.

2.3.2.2.3 Reply Rate Capability

Step 1 ATCRBS Reply Rate Capability (§2.2.3.4.1.a and §2.2.3.4.2)

Set the transponder for a 15-pulse ATCRBS reply. Interrogate the transponder at a constant rate of 500 ATCRBS interrogations per second plus 50 Mode S interrogations (with short replies) per second. Measure the output power and frequency. If the transponder is equipped for long Mode S reply formats, repeat the test with 16 (24 if also equipped with the enhanced data link protocols) of the 50 Mode S interrogations requiring long replies.

Step 2 Continuous Reply Rate Capability (§2.2.3.4.1.a and §2.2.3.4.2)

Set the transponder for a 14 pulse plus SPI-pulse ATCRBS reply. Interrogate the transponder at a constant rate of 500 ATCRBS interrogations per second plus 50 Mode S interrogations (with short replies) per second. If the transponder is equipped for long Mode S reply formats, have 16 (24 if also equipped with the enhanced data link protocols) of the 50 Mode S interrogations requiring long replies. Determine reply ratio for each type of interrogation.

Step 3 100 Milliseconds Peak Reply Rate Capability (§2.2.3.4.1 b & c and §2.2.3.4.2)

Set the transponder for a 14 pulse plus SPI-pulse ATCRBS reply. Interrogate the transponder with periodic bursts of ATCRBS and Mode S interrogations as follows: 120 ATCRBS interrogations (100 if the equipment is intended for installation in aircraft that operate at altitudes not exceeding 15,000 feet) plus 18 Mode S interrogations (with short replies), each type of interrogation approximately uniformly spaced within a single 0.1-second interval, followed by a 0.9-second interval with no interrogations. If the transponder is equipped for long Mode S reply formats, have 6 (9 if also equipped with the enhanced data link protocols) of the 18 Mode S interrogations requiring long replies. Determine reply ratio for each type of interrogation.

Step 4 25 Millisecond Peak Reply Rate Capability (§2.2.3.4.2)

Set the transponder for a 14 pulse plus SPI-pulse ATCRBS reply. Interrogate the transponder with periodic bursts of ATCRBS and Mode S interrogations as follows: 30 ATCRBS interrogations (25 if the equipment is intended for installation in aircraft that operate at altitudes not exceeding 15,000 feet) plus 8 Mode S interrogations (requiring short replies), each type of interrogation burst approximately uniformly spaced within a single 25-millisecond interval, followed by a 975-millisecond interval without interrogations. If the transponder is equipped for long Mode S reply formats, have 4 (6 if also equipped with the enhanced data link protocols) of the 8 Mode S interrogations requiring long replies. Determine reply ratio for each type of interrogation.

Step 5 1.6 Milliseconds Peak Reply Rate Capability (§2.2.3.4.1 and §2.2.3.4.2)

Repeat Step 3 with the following modification: Use two ATCRBS interrogations plus four Mode S interrogations (with short replies), each type of interrogation approximately uniformly spaced within a single 1.6-millisecond interval, followed by a 998.4-millisecond interval with no interrogation. If the transponder is so equipped, two of the Mode S interrogations require long replies instead of all short replies. Determine reply ratio for each type of interrogation.

2.3.2.3 Reply Pulse Characteristics (§2.2.4)

2.3.2.3.1 ATCRBS Reply Pulse Characteristics (§2.2.4.1)

Step 1 ATCRBS Reply Pulse Spacing and Width (§2.2.4.1)

Interrogate with a standard Mode A interrogation. Use a 14-pulse reply group (7777) and measure the time between the first and last framing pulses. This time **shall** be 20.30 ±0.10 microseconds. Measure the width of the first and last pulses. This width **shall** be 0.45 ±0.10 microseconds. Observe that all code pulses are of equal width and stable in position with respect to the first pulse.

Step 2 Reply Delay and Jitter (§2.2.4.1.6.a and §2.2.4.1.6.b)

Connect the equipment as shown in Figure 2-26. Interrogate the transponder with a standard Mode A interrogation. Measure the average delay between the leading edge of P_3 and the leading edge of the first reply pulse at the 50%

amplitude points and the extreme positions of the leading edge of the first reply pulse at signal levels of MTL +3 dB, -50 dBm and -21 dBm.

2.3.2.3.2 Mode S Replies (§2.2.4.2)

Step 1 Mode S Reply Delay and Jitter (§2.2.4.2.5.a)

Interrogate the transponder with a standard Mode S interrogation using any format for which a reply is required. Measure the extreme positions of the leading edge of the first reply pulse, at signal levels of MTL +3 dB, -50 dBm and -21 dBm, and the delay between the P_6 sync phase reversal transient and the leading edge of the first reply pulse.

Step 2 ATCRBS/Mode S All-Call Reply Delay and Jitter (§2.2.4.2.5.b)

Interrogate the transponder with a standard ATCRBS/Mode S All-Call interrogation. Measure the extreme positions of the leading edge of the first reply pulse at signal levels of MTL +3 dB, -50 dBm and -21 dBm, and the delay between the leading edge of P_4 and the leading edge of the first reply pulse.

2.3.2.4 Side Lobe Suppression (§2.2.5)

Step 1 SLS Decoding [§2.2.5.1.a (1) and (3)]

Connect the equipment as shown in Figure 2-27. Interrogate the transponder with a standard Mode A interrogation plus P_2 RF signal level to be at MTL +3 dB; P_2 level = P_1 level. Verify that the reply ratio is less than one percent.

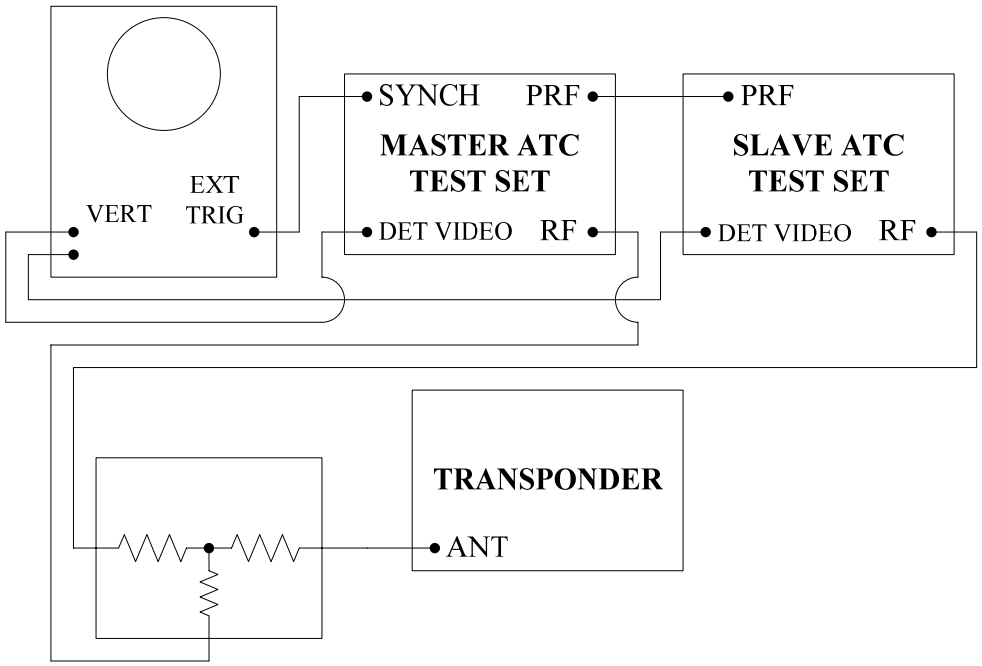

Figure 2-27: ?????????

Step 2 SLS Dynamic Range [§2.2.5.1.a (2) and §2.2.5.1.c]

Repeat Step 1 at RF signal levels: -60 dBm, -40 dBm and -21 dBm.

Step 3 SLS Pulse Ratio (§2.2.5.1.b)

Repeat Step 1 at RF signal levels MTL +3 dB, -40 dBm and -21 dBm. Set P_2 level 9 dB below P_1 level.

Step 4 Suppression Duration [§2.2.5.1.d (1)]

Interrogate the transponder with a P_1 - P_2 ATCRBS suppression pulse pair (2 microsecond spacing), followed after 50 microseconds with a P_1 - P_3 (Mode A, 8 microseconds) pulse pair. Reduce the spacing of the P_1 - P_3 pair until the transponder ceases to reply. The time interval between the leading edges of P_2 and P_1 (of the P_1 - P_3 pair) is the suppression duration.

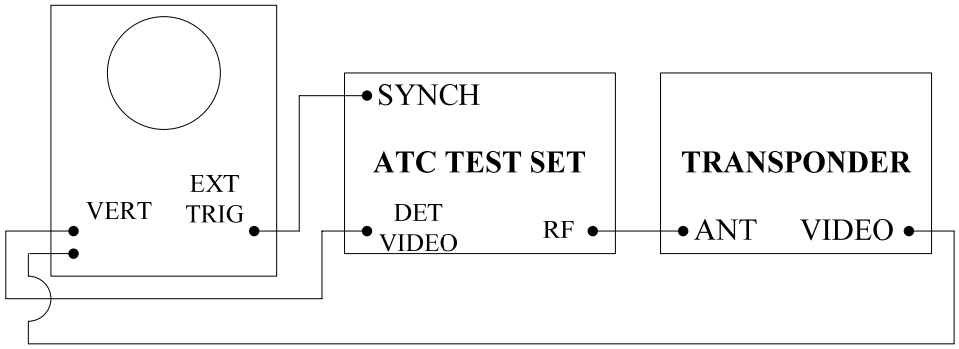

Figure 2-28: ?????? not referenced anywhere

2.3.2.5 Pulse Decoder Characteristics (§2.2.6)

Step 1 Pulse Level Tolerances, ATCRBS/Mode S All-Call (§2.2.6.1.1)

Connect the equipment as shown in Figure 2-26. Interrogate at the standard rate and at an input level 10 dB above MTL. Use an ATCRBS Mode A interrogation followed by a 1.6-microsecond P_4 pulse in its nominal position. Vary the level of the P_4 pulse between -10 and 0 dB in 1 dB steps with respect to P_3. Verify the changeover from ATCRBS to Mode S replies at the relative P_4 levels specified in §2.2.6.1.1.a and §2.2.6.1.1.b.

Step 2 Pulse Level Tolerances, ATCRBS-Only All-Call (§2.2.6.1.2)

Use setup and signal levels as in Step 1 above but employ a 0.8 microsecond P_4. Vary the level of the P_4 pulse between -10 and 0 dB in 1 dB steps with respect to P_3. Verify the changeover from ATCRBS replies to no replies at the relative P_4 levels specified in §2.2.6.1.2.a and §2.2.6.1.2.b.

Step 3 Pulse Position Tolerances, $P_1/_3$, ATCRBS-Type Interrogations (§2.2.6.2 a and b)

Use setup and signal levels as in Step 1 above. Interrogate with:

a. ATCRBS Mode A

b. ATCRBS Mode C/Mode S All-Call

For each interrogation type vary the P_1 - P_3 spacing within the required acceptance range (§2.2.6.2.a) and verify that the reply ratio is at least 90%.

Step 4 Pulse Position Tolerances, P_4, ATCRBS/Mode S All-Calls (§2.2.6.2 a and c)

Use setup and signal levels as in Step 1 and interrogate with an ATCRBS Mode A/Mode S All-Call. Vary the P_3 - P_4 spacing within the required acceptance range. Determine conformance to requirements as in Step 3.

Step 5 Short Pulse Rejection, ATCRBS-Type Interrogations (§2.2.6.3.c)

Use setup as in Step 1 and set signal input level to MTL for each of the following interrogation types:

a. ATCRBS Mode A

b. ATCRBS Mode C/Mode S All-Call

For each interrogation type set P_1 duration to 0.25 microsecond and verify that less than 10% replies are generated. Repeat test for a P_3 duration of 0.25 microsecond. Repeat tests at -60 dBm and -45 dBm input level.

Step 6 Sync Phase Reversal Position Tolerance (from P_2) (§2.2.6.4)

Generate a standard Mode S-Only All-Call interrogation at MTL +3 dB. Vary the spacing between the P_6 sync phase reversal and either P_2 or P_6 as applicable by 200 nanoseconds from the nominal spacing. Measure the range over which Mode S replies are received. Repeat for P_1 levels of -50 dBm and -21 dBm.

2.3.2.6 Transponder Recovery and Desensitization (§2.2.7)

Step 1 ATCRBS Single Pulse Desensitization and Recovery (§2.2.7.1.1 and §2.2.7.2)

Connect the equipment as shown in Figure 2-27. Set the master test set to generate a single pulse not less than 0.7 microsecond wide at the standard ATCRBS interrogation rate and a power level equal to 50 dB above MTL. Set the slave test set to generate an ATCRBS Mode A interrogation delayed 3 microseconds from the trailing edge of the single pulse. Determine the amplitude of the slave test set signal required to produce 90% reply efficiency. Repeat for master to slave test set delay of 15 microseconds.

Step 2 Recovery from a Mode S Interrogation Requiring No Reply (§2.2.7.2.1)

With the equipment connected as shown in Figure 2-27, set the master test set to generate a short Mode S surveillance interrogation with broadcast address. Set the slave test set to generate an ATCRBS Mode A interrogation at a power level equal to 3 dB above MTL. Measure the delay time between the master and the slave test sets necessary to elicit a reply efficiency of 90%.

Step 3 Recovery from a Mode S Comm-C Interrogation (§2.2.7.2.1)

With equipment connected as shown in Figure 2-27, set the master test set to generate the initial segment of a properly addressed Comm-C interrogation at a signal level of -21 dBm. Set the slave test set to generate an ATCRBS Mode A inter-rogation delayed 45 microseconds from the sync phase reversal of the master interrogation. Determine the amplitude of the slave test signal required to produce 90% reply efficiency.

Step 4 Recovery from a Suppression Pair (§2.2.7.2.2)

With equipment connected as shown in Figure 2-27, set the master test set to generate a P_1 - P_2 pulse pair at the ATCRBS standard interrogation rate and a power level equal to -35 dBm. Set the slave test set to generate a Mode S-Only All-Call interrogation delayed 10 microseconds from the trailing edge of the P_2 pulse of the master test set interrogation. Determine the amplitude of the slave test set signal required to produce 90% reply efficiency.

2.3.2.7 Standard Interference Pulse (§2.2.8.2) and Mode S SLS (§2.2.5.2)

Connect the equipment as shown in Figure 2-27. Interrogate the transponder with an interfering pulse (duration: 0.8 microsecond, level 6 dB below P_6) inserted at a position 1.8 microseconds after the leading edge of P_6 of a standard Mode S-Only All-Call. The Mode S-Only All-Call **shall** be at a power level of -50 dBm. Observe the reply ratio while slowly moving the interfering pulse from its initial position to the end of P_6. Repeat the test for signal levels of -21, and -68 dBm.

Repeat the test with an interference pulse level 3 dB below the P_6 level.

Insert the interfering pulse (now acting as P_5) 0.85 microsecond after the leading edge of P_6 and use a level 3 dB above the level of P_6. Use signal levels of MTL +3 dB and -21 dBm. Reply ratio in all cases should be 10% or less (§2.2.5.2.a).

Reduce the level of P_5 to a value 12 dB below the level of P_6 and repeat the test at signal levels of MTL +3 dB and -21 dBm. Reply ratio should be 99% or more (§2.2.5.2.b).

2.3.2.8 Undesired Replies (§2.2.9)

With no interrogations count the number of replies for a minimum of one minute.

2.3.2.9 Self-Test and Monitors (§2.2.10)

Step 1 Self-Test Interrogation/Reply Rate (§2.2.10.1 a and c)

Activate the self-test function (if provided) of the transponder under test and determine the reply rate to the self-test interrogation.

Step 2 Squitter Monitor (§2.2.10.2)

A specific test procedure for this function is not described. This test requires that the manufacturer artificially disable the squitter generation function. The detailed procedure for proving this capability must be left to the discretion of the manufacturer.

2.3.2.10 Diversity Operation (§2.2.12)

Two means of generating identical ATCRBS and Mode S interrogations which can be delayed from each other from 125 to 375 nanoseconds must be provided. These two generators must also have independent control of power level.

Means of determining the antenna terminal that generates the reply.

Means of determining the reply power level on both antennas simultaneously.

Means of determining reply delay for each channel and between channels.

Measurement Procedure:

Note: *Because the specifications for diversity operations are symmetrical in all respects, channels are arbitrarily designated A and B.*

Step 1 Single Channel Test (§2.2.12.3 and §2.2.12.4)

When measuring channel A and B parameters take care that any cables used for measurements are of equal length and equal loss. Interrogate channel A only, while monitoring channel A and B. At signal level MTL +6 dB use the following types of interrogations and record the listed observations:

ATCRBS Mode A

ATCRBS Mode C/Mode S All-Call

Mode S formats UF=0, and if so equipped 20

For signal levels of -50 dBm and -21 dBm use an ATCRBS Mode A and a Mode S format of UF=0 types of interrogations and record the listed observations.

Observe: Correct reply channel.

Reply delay for each interrogation signal type and for the signal levels as specified.

Correct power ratio per §2.2.12.3.

Repeat the above test reversing channels.

Compare records of reply delays for conformance with §2.2.12.4.

Step 2 Selection Test (§2.2.12.1.b)

Synchronize the interrogations to channels A and B so that they are 0.125 +0.00/-0.040 microseconds apart where channel A is first.

Use an ATCRBS Mode C and a Mode S UF=4 to interrogate at a power level on channel A of MTL and a power level on channel B of MTL +6 dB.

Observe that the correct reply channel is channel B.

Use an ATCRBS Mode C and a Mode S UF=4 to interrogate at a power level on channel A of MTL +6 dB and a power level on channel B of MTL.

Observe that the correct reply channel is channel A.

Synchronize the interrogations to channels A and B so that they are 0.125 +0.00/-0.040 microseconds apart where channel B is first.

Use an ATCRBS Mode C and a Mode S UF=4 to interrogate at a power level on channel A of MTL and a power level on channel B of MTL +6 dB.

Observe that the correct reply channel is channel B.

Use an ATCRBS Mode C and a Mode S UF=4 to interrogate at a power level on channel A of MTL +6 dB and a power level on channel B of MTL.

Observe that the correct reply channel is channel A.

Step 3 Delay-Selection Test (§2.2.12.2)

Synchronize the interrogations to channels A and B so that they are 0.375 +0.040/-0.00 microseconds apart where channel A is first.

Use an ATCRBS Mode C and a Mode S UF=4 to interrogate at a power level on channel A of MTL +6 and a power level on channel B of -50 dBm.

Observe that the correct reply channel is channel A.

Synchronize the interrogations to channels A and B so that they are 0.375 +0.040/-0.00 microseconds apart where channel B is first.

Use an ATCRBS Mode C and a Mode S UF=4 to interrogate at a power level on channel A of -50 dBm and a power level on channel B of MTL +6.

Observe that the correct reply channel is channel B.

2.3.2.11 Data Handling and Interfaces (§2.2.13)

2.3.2.11.1 Fixed Direct Data (§2.2.13.1.1)

With the transponder RF port connected to the RF port of the Mode S transponder test set, perform the following test sequences.

Step 1 Mode S All-Call Addresses [§2.2.13.1.1.a (1)]

Interrogate the transponder with a Mode-S Only All-Call interrogation with PR, IC and CL fields set to ZERO. Verify that the AA field of the transponder reply reflects the address which has been set into the transponder. Use two different addresses consisting of AAAAAAH and 555555H.

Step 2 Mode S Discrete Address [§2.2.13.1.1.a (2)]

Interrogate the transponder with a standard Mode S surveillance-altitude interrogation (UF=4) with the PC, RR, DI and SD fields set to 0 and an address consisting of ONE followed by 23 ZEROs. Verify that the transponder replies with appropriate bits set in the AP field when a like address is set into the transponder, and will not respond when each of the other combinations of 23 ZEROs and a single ONE are entered as addresses.

Step 3 Maximum Airspeed [§2.2.13.1.1.b (2)]

Interrogate the transponder with a short special surveillance interrogation (UF=0) with the AQ field set to 1. Verify that the RI field of the transponder reply corresponds to the airspeed code set into the transponder as each of the seven possible airspeed codes is used.

Step 4 Aircraft Identification Data (§2.2.13.1.1.c)

Appropriate test procedures are presented in §2.6. ← *BOB SAFFELL ACTION TO WRITE A SUBSET OF THIS FOR ENVIRONMENTAL*

2.3.2.11.2 Variable Direct Data (§2.2.13.1.2)

Step 1 Pressure Altitude (ATCRBS) [§2.2.13.1.2.a (1)]

Connect the equipment as shown in Figure 2-26. Interrogate the transponder with a standard ATCRBS Mode C interrogation. With the ALT switch on, set altitude code inputs to the transponder, which should result in setting each of the altitude bits in the reply one at a time. Verify proper positioning of these bits in the reply. Verify that only the framing pulses are present in the reply when the ALT switch is set to "off."

Step 2 4096 Identification Code (ATCRBS) (§2.2.13.1.2.b)

With equipment connected as in Step 1, interrogate the transponder with a standard ATCRBS Mode A interrogation. Set identification codes which should result in the setting of each of the identification reply bits one at a time. Verify proper positioning of these bits, and that the correct bits are present in the reply.

Step 3 Pressure Altitude (Mode S) [§2.2.13.1.2.a (2)]

← BOB SAFFELL TO REVIEW SIMILAR DELETION IN 2.4 AND WRITE A SUBSET OF WHAT WAS COPIED FROM ED-73C 5.4.12.2, STEP 3

Step 4 Identification Code (Mode S) (§2.2.13.1.2.b)

With the equipment connected as in Step 3, interrogate the transponder with a standard surveillance-identity interrogation (UF=5) with PC, RR, DI and SD fields set to ZERO (0) and the address the same as that provided to the transponder. Using the identity codes specified in Step 2, verify that the proper bit patterns exist in the ID field of the reply.

Step 5 Flight Status and Vertical Status (§2.2.13.1.2 c and d)

Interrogate with UF=0 and UF=16 and verify that the VS field is a ONE when the "on-the-ground port" of the transponder is set to the on-the-ground condition. Also, verify that the VS field is a ZERO otherwise.

Interrogate with formats UF=4, 5, 20, 21 and verify that the transponder follows the protocol of §2.2.18.2.7 and Figure 2-13.

Step 6 Aircraft Identification Data (§2.2.13.1.2.e)

Appropriate test procedures are presented in §2.6. ← BOB SAFFELL to check

2.3.2.11.3 Standard Transaction Interfaces (§2.2.13.3)

Step 1 Uplink Interface Information Content (§2.2.13.3.1.a)

Interrogate the transponder with valid Mode S interrogations of all uplink formats that the transponder is designed to accept. Verify that all fields (possibly excluding AP) of the interrogations are passed correctly through the transponder and except for UF=0, 11, 16, and 24 (when it is a request for a downlink ELM) appear at the uplink interface.

Step 2 Uplink Interface, "No-Storage Design" (§2.2.13.3.1.b)

Interrogate the transponder with valid Mode S interrogations of all uplink formats that the transponder is designed to accept. Verify that all data appear correctly at the uplink interface prior to the start of the transponder reply.

Step 3 Uplink Interface, "Storage Design" Acceptance Rate (§2.2.13.3.1.c)

Interrogate the transponder with valid Mode S interrogations (both short and long) at the rates and time periods specified in §2.2.3.4.2. Verify that all data appear correctly at the uplink interface.

Step 4 Downlink Interface, Information Content (§2.2.13.3.2.a)

Insert an all ONEs input. Interrogate the transponder with all uplink formats that it is designed to accept (one interrogation of each format, RR=16 for long interrogations). Verify that all bits in the transponder replies, not set by transponder protocol requirements, are ONE. Verify that all fields in the replies, set by transponder protocol, have the correct value.

Step 5 Downlink Interface, "No-Storage Design" (§2.2.13.3.2.b)

Insert an all ONEs input. Interrogate the transponder with a standard Comm-A, altitude interrogation. Verify that data are inserted into the transponder at the proper time, and that the transponder reply contains the proper data.

Step 6 Downlink Interface, "Storage Design" Buffer Rate, Buffer Function (§2.2.13.3.2.c)

Set up a sequence of Comm-B replies with the value of the last 48 bits of MB of each reply set to the number of the reply in the sequence (e.g., MB=1 for the first reply). Interrogate the transponder with a standard Comm-A, altitude interrogation at the rates specified for long interrogations in §2.2.3.4. Verify

that the replies include the proper data in the MB field. Repeat with RR equal to all valid codes from 16 -through- 18.

2.3.2.11.4 ELM Service Interfaces (§2.2.13.4)

Connect the transponder RF port to the RF port of the Mode S transponder test set. Connect the Mode S transponder test set of the ELM data link device to the ELM interface port of the transponder and perform the following sequences.

Step 1 ELM Uplink Interface, Data Rate (§2.2.20.1.4)

Interrogate the transponder with four 16-segment uplink ELMs (each segment having unique coding, interrogations spaced 50 microseconds apart, and a new 16 segment ELM starting every 5 milliseconds). After 4 seconds for transponders equipped for standard ELM operation and after 1 second for transponders equipped for enhanced uplink ELM operation, interrogate the transponder with another set of four 16-segment ELMs. Verify that correct data appear at the ELM interface for both interrogation bursts.

Step 2 ELM Downlink Interface, Data Rate (§2.2.20.2.4 and §2.2.3.5)

Set up a downlink ELM which conforms to the maximum capability of the transponder (each segment with unique coding) on the Mode S transponder test set or ELM data link device. Interrogate the transponder with a Comm-C (UF=24) with RC=3 and SRS= "ALL ONEs." Verify that all segments are properly transmitted 136 ±1 microseconds apart.

2.3.2.11.5 Interface Integrity Tests (§2.2.13.2.2)

Specific test procedures for these functions are not described. Detailed procedures for demonstrating compliance with §2.2.13.2.2 are left to the discretion of the manufacturer.

2.3.2.12 Restoration of Power (§2.2.16)

Apply the momentary power interruption sequence appropriate for the transponder environmental category as specified in DO-160B, Section 16. Two seconds after the restoration of power following each power interruption, interrogate the transponder with a Mode S-Only All-Call interrogation with PR, IC and CL fields set to ZERO (0). Verify that a correct All-Call reply (DF=11) is transmitted in response to this interrogation.

2.4 Equipment Test Procedures

2.4.1 Definitions of Terms and Conditions of Test

The following definitions of terms and conditions of tests are applicable to the equipment tests specified herein:

a. Power Input Voltage – Unless otherwise specified, all tests **shall** be conducted with the power input voltage adjusted to design voltage ±2 percent. The input voltage **shall** be measured at the input terminals of the equipment under test.

b. Power Input Frequency

(l) In the case of equipment designed for operation from an ac source of essentially constant frequency (e.g., 400 Hz), the input frequency **shall** be adjusted to design frequency ±2 percent.

(2) If the equipment is designed for operation from an ac source of variable frequency (e.g., 300 to 1000 Hz), tests **shall** be conducted with the input frequency adjusted to within five percent of a selected frequency and, unless otherwise specified, within the range for which the equipment is designed.

c. Accuracy of Test Equipment – Throughout this section, the accuracy of the test equipment is not addressed in detail, but rather is left to the calibration process prescribed by the agency which certifies the testing facility.

d. Adjustment of Equipment – The circuits of the equipment under test **shall** be properly aligned and otherwise adjusted in accordance with the manufacturer's recommended practices prior to application of the specified tests. Unless otherwise specified, adjustments may not be made once the test procedures have started.

e. Test Instrument Precautions – During the tests, precautions **shall** be taken to prevent the introduction of errors resulting from the connection of voltmeters, oscilloscopes and other test instruments, across the input and output terminals of the equipment under test.

f. Ambient Conditions – Unless otherwise specified, all tests **shall** be conducted under conditions of ambient room temperature, pressure and humidity. However, the room temperature **shall not** be lower than 10 degrees C.

g. Connected Loads – Unless otherwise specified, all tests **shall** be performed with the equipment connected to loads having the impedance values for which it is designed.

h. Standard Interrogation Test Signals

The signal measurement convention **shall** be as specified in §2.1.11.

(l) General Characteristics

(a) Radio Frequency: The carrier frequency of the signal generator for ATCRBS and ATCRBS/Mode S All-Call interrogation **shall** be 1030 ±0.1 MHz. Mode S interrogation signals **shall** have a carrier frequency of 1030 ±0.01 MHz.

(b) CW Output: The CW output between pulses **shall** be at least 50 dB below the peak level of the pulse.

(c) Pulse Rise and Fall Time: Rise and fall times **shall** be as specified in §2.1.11.3.1 and §2.1.11.4.1.

Note: *Unless otherwise indicated, interval measurements are measured between half voltage points of the respective pulses as detected by a linear detector.*

(d) Pulse Top Ripple: The instantaneous amplitude of the pulses **shall not** fall more than 1 dB below the maximum value between the 90 percent voltage amplitude point on the leading and trailing edge of the pulse.

(e) Signal Level: Unless otherwise noted in the measurement procedure, the signal level **shall** be -60 ±3 dBm.

(f) Interrogation Repetition Standard Rate: Unless otherwise noted in the measurement procedure, interrogation rates **shall** be 450 ±25 Hz for ATCRBS interrogations and 45 ±5 Hz for All-Call and Mode S interrogation.

(g) Mode S Interrogation Address: Unless otherwise noted in the measurement procedure, the transponder address encoded in a Mode S interrogation **shall** be: Hexadecimal-AA AAAA, (i.e., binary 1010 1010 1010 1010 1010 1010).

(2) ATCRBS, ATCRBS/Mode S All-Call and ATCRBS-Only All Call Interrogations

The nominal characteristics **shall** be as specified in §2.1.11.3.

(3) Mode S Interrogations

The nominal characteristics **shall** be as specified in §2.1.11.4.

(a) Standard Mode S-Only All-Call Interrogation: Standard Mode S -Only All-Call interrogation is defined as a Mode S interrogation with UF=11, PR=8, IC and CL=0. An address of 24 ONEs is used in generation of the AP field.

(b) Standard Mode S Surveillance – Altitude Interrogation: Standard Mode S Surveillance Altitude Interrogation is defined as a Mode S interrogation of uplink format 4 (UF=4, Figure 2-4) with the following mission field values:

PC=0
RR=0
DI=0
SD=0

(c) Standard Mode S Surveillance – Identity Interrogation: Standard Mode S Surveillance – Identity Interrogation is defined as a Mode S interrogation of uplink format 5 (UF=5, Figure 2-4) with the following mission field values:

PC=0
RR=0
DI=0
SD=0

(d) Standard Comm-A – Altitude Interrogation: Standard Comm-A – Altitude Interrogation is defined as a Mode S interrogation of uplink format 20 (UF=20) with the following mission field values:

PC=0
RR=20
DI=0
SD= all ONEs
MA=hexadecimal - AA AAAA AAAA AAAA

i. Mode S Transponder Test Set

The Mode S transponder test set referenced in the detailed test procedures section is assumed to have the following minimum capabilities:

(1) Means of varying RF frequency by at least 60 MHz from center frequency.

(2) Means of varying the amplitude of the interrogating signal level from at least -21 to -85 dBm.

(3) Means of varying the amplitude of either P_2, P_3 or P_4 with respect to P_1.

(4) Means of measuring the number of correct replies transmitted in response to valid interrogations.

(5) Means of varying interval spacings between the following pairs of pulses: P1 - P_2, P1 - P_3 and P_3- P_4.

(6) Means of independently varying the durations of P_1, P_2, P_3 and P_4.

(7) Means of selecting ATCRBS Mode A or Mode C, ATCRBS/Mode S All-Call, ATCRBS-Only All-Call or Mode S interrogation formats.

(8) Means of providing carrier phase modulation of the P_6 pulse.

(9) Means of selecting the data which will modulate the P_6 pulse.

(10) Means to display the downlink reply bit pattern generated by the unit under test in response to a Mode S or All-Call interrogation.

(11) Means of adding a single 0.8 microsecond wide pulse or 0.8 microsecond pulse pairs spaced 2.0 microseconds apart, with level adjustable from 12 dB below P_1 to equal with P_1 at a carrier frequency of 1030.0, +0.2 MHz, incoherent with the Mode S signal frequency, with the following characteristics:

(a) Repetition frequencies variable up to 10,000 Hz.

(b) Positionable anywhere from the first pulse coincident with P_1 to the second pulse coincident with the end of P_6.

(12) Means to synchronize interrogation repetitions with a like test set.

(13) Means to rapidly change between two interrogation rates.

(14) Means to move the sync phase reversal position in P_6 over a +200 nanosecond range from assigned position.

(15) Means of encoding Mode S interrogations with proper parity check sequence.

(16) Means of decoding Mode S replies using proper parity check sequence.

(17) Means for interlacing ATCRBS and Mode S interrogations.

(18) Means of generating ATCRBS and Mode S burst rates in accordance with §2.2.3.4.

(19) Means of adding single 6.4 ±0.5-microsecond pulses or 3.5 ±0.5-microsecond pulse pairs spaced either 12 ±0.5 or 30 ±0.5 microseconds apart. The level **shall** be set at -30 dBm at a carrier frequency variable from 962 to 1213 MHz. The repetition rate on the pulse pairs **shall** be variable up to 3600 Hz and on the single pulses up to 2000 Hz.

2.4.2 Detailed Test Procedures

The test procedures set forth below are considered satisfactory for use in determining required performance under standard and stressed conditions. Although specific test procedures are cited, it is recognized that other methods may be preferred by the testing facility. These alternate procedures may be used if the manufacturer can show that they provide at least equivalent information. In such cases, the procedures cited herein should be used as one criterion in evaluating the acceptability of the alternate procedures.

For more detailed procedures regarding digital data, see §2.5.

2.4.2.1 Receiver Characteristics (§2.2.2)

Equipment Required:

ATC Test Set with P_4 Capability (TIC T-50-3A/4B, or equivalent)

Measurement Procedure:

With the equipment connected as shown in Figure 2-24, interrogate the transponder with a standard Mode A interrogation and follow Steps l through 4 below.

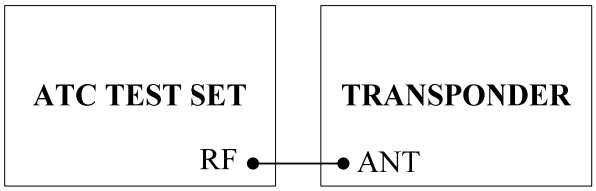

Figure 2-24: ??????

Note: *The power can be measured either at the antenna or at the LRU (if corrections for cable loss are included).*

Step 1 Sensitivity Variation with Frequency (§2.2.2.2)

Vary the RF signal frequency over the range 1029.8 to 1030.2 MHz. Use a frequency increment that includes 1030.0 MHz. Determine the variation in

RF signal level that is required to produce 90 percent transponder reply efficiency. Also determine the required maximum RF signal level.

Step 2 Sensitivity (§2.2.2.4 a and e)

Connect the equipment as shown in Figure 2-24. Interrogate the transponder with a standard Mode A interrogation. Determine the minimum RF signal level required to produce 90 percent transponder reply efficiency. Repeat the procedure using a standard Mode A ATCRBS/Mode S All-Call interrogation and a standard Mode C ATCRBS/Mode S All-Call interrogation. Determine MTL for all cases. This is the ATCRBS MTL.

Step 3 ATCRBS and ATCRBS/Mode S All-Call Dynamic Range (§2.2.2.4.f)

Repeat Step 2 for RF levels in 5 dB intervals between MTL +3 dB and -21 dBm. Determine reply ratio.

Step 4 Bandwidth (§2.2.2.3)

Adjust the RF signal level to 60 dB above MTL. Determine the frequencies above and below 1030 MHz at which 90 percent transponder reply efficiency is obtained.

Note: *Care must be taken to avoid high signal levels at or near center frequency.*

Step 5 ATCRBS and ATCRBS/Mode S All-Call Low-Level Reply Ratio (§2.2.2.4.d)

Repeat Step 2 for an RF level of -81 dBm. Determine reply ratio.

Note: *The following steps require the use of test equipment having the capabilities set forth in §2.4.1.i.*

Step 6 Mode S (§2.2.2.4.b)

Interrogate the transponder with a Mode-S Only All-Call interrogation at a standard rate with PRO. Determine the minimum RF level to produce 90 percent proper reply efficiency.

Step 7 Mode S Dynamic Range (§2.2.2.4.c)

Using the signal specified in Step 6, determine the reply efficiency for RF levels between MTL +3 dB and -21 dBm; use 5 dB steps.

Step 8 Mode S Low-Level Reply Ratio (§2.2.2.4.d)

Using the signal specified in Step 6, determine reply efficiency for an RF level of -81 dBm.

2.4.2.2 Transmitter Characteristics (§2.2.3)

2.4.2.2.1 Reply Transmission Frequency (§2.2.3.1)

Equipment Required:

ATC Test Set with P_4 capability (TIC T-50-3A/4B, or equivalent).
Stub Tuner (Microlab/FXR Sl-05N, or equivalent).
Variable Air Line (Line Stretcher) (Microlab/FkR SR-05N, or equivalent).
Slotted Line (HP 805C, or equivalent).

Measurement Procedure:

Connect the equipment as shown in Figure 2-25. Adjust the stub to establish a 1.5:1 VSWR at the antenna end of the coax line specified by the manufacturer. If the transponder requires a minimum length of a specified cable type, an attenuator equal to the loss of the minimum amount of cable may be placed between the 1.5:1 VSWR point and the transponder antenna jack. Alternately, a length of cable equal to the specified minimum length and cable type may be used in lieu of the attenuator. Interrogate the transponder with a standard Mode A interrogation and adjust the line stretcher to determine the maximum and minimum transmitter frequency. Use a 14 (7777) pulse reply group. Repeat the above procedure with a standard Mode A ATCRBS/Mode S All-Call at standard rate only. Determine that the frequency shift does not exceed the requirements of §2.2.3.1.

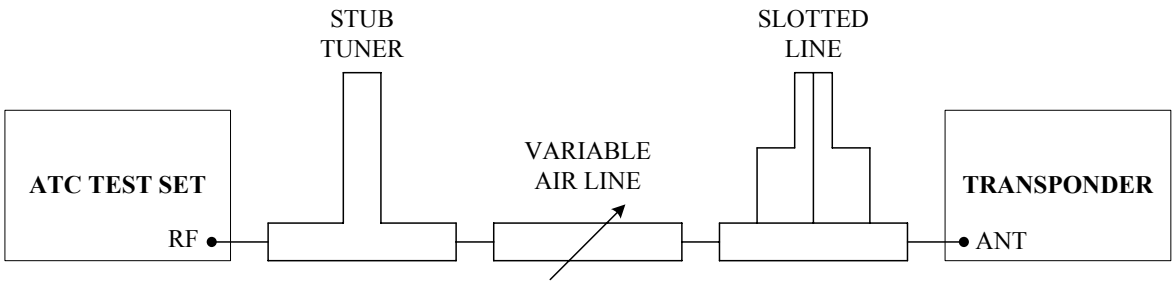

Figure 2-25: ??????

2.4.2.2.2 RF Peak Power Output (§2.2.3.2)

Equipment Required:

ATC Test Set with P_4 capability (TIC T-50-3A/4B, or equivalent).
Wide Band Dual Channel Oscilloscope (HP 1710B, or equivalent).

Measurement Procedure:

Step 1 ATCRBS Power Output (§2.2.3.2)

Connect the equipment as shown in Figure 2-26. Set the transponder for a 14 (7777) pulse reply. Interrogate the transponder with a standard Mode A interrogation and measure the single pulse having the least RF power output. While varying the interrogation rate from 100 interrogations per second to the maximum interrogation rate specified for the transponder, determine that the power output meets the requirements of §2.2.3.2.

Repeat the procedure measuring the single pulse having the most RF power output.

Step 2 Short Mode S Power Output (§2.2.3.2)

Repeat Step 1 with a standard Mode A ATCRBS/Mode S All-Call interrogation at standard rate only.

Step 3 Long Mode S Power Output

For transponders with long reply capability (Level 2 or above), repeat Step 1 with sixteen Mode S interrogations per second using any format and coding for which a long reply is required.

If the transponder is also Extended Squitter capable, then configure the transponder so that the transponder is transmitting the Extended Squitters (or an equivalent number of long replies) in addition to the sixteen replies.

Step 4 Extended Long Mode S Power Output

For transponders with extended reply capability (Level 4 or above), repeat Step 3, stimulating the maximum rate of long replies for which the transponder is designed.

2.4.2.2.3 Unwanted Power Output (§2.2.3.3 and §2.2.22.f)

Equipment Required:

Test Set with Mode S capability.
Spectrum Analyzer (HP 8535A, or equivalent).
Directional Coupler (HP 796D, or equivalent).

Note: *For test equipment protection, the transponder transmitter modulation may be disabled by external means.*

Measurement Procedure:

Connect the equipment as shown in Figure 2-32. Do not interrogate the transponder. Measure the RF output power between squitter transmission periods.

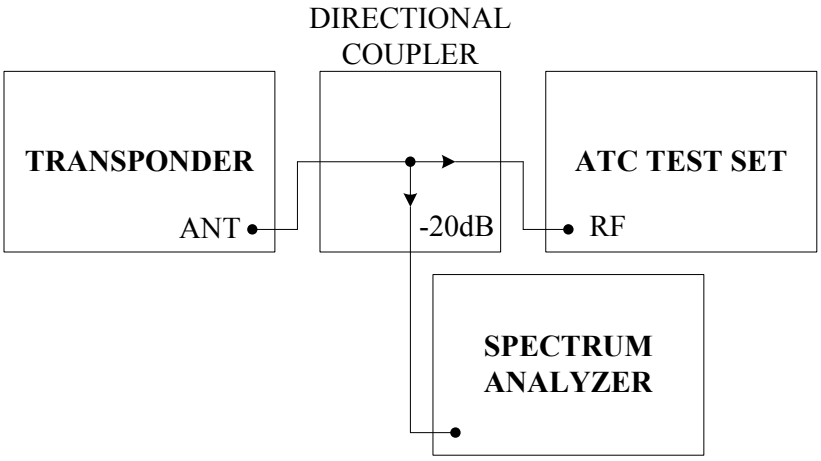

Figure 2-32: ??????

2.4.2.2.4 Reply Rate Capability

Equipment Required:

Mode S Transponder Test Set.

Measurement Procedure:

Step 1 Continuous Reply Rate Capability (§2.2.3.4.1.a and §2.2.3.4.2)

Set the transponder for a 15-pulse ATCRBS reply. Interrogate the transponder at a constant rate of 500 ATCRBS interrogations per second plus 50 Mode S interrogations (with short replies) per second. Determine reply ratio for each type of interrogation. Measure the output power and frequency. If the transponder is equipped for long Mode S reply formats, repeat the test with 16 (24 if also equipped with the enhanced data link protocols) of the 50 Mode S interrogations requiring long replies.

Step 2 100 Milliseconds Peak Reply Rate Capability (§2.2.3.4.1 b & c and §2.2.3.4.2)

Set the transponder for a 15-pulse ATCRBS reply. Interrogate the transponder with periodic bursts of ATCRBS and Mode S interrogations as follows: 120 ATCRBS interrogations (100 if the equipment is intended for installation in aircraft that operate at altitudes not exceeding 15,000 feet) plus 18 Mode S interrogations (with short replies), each type of interrogation approximately uniformly spaced within a single 0.1-second interval, followed by a 0.9-second interval with no interrogations. Determine reply ratio for each type of interrogation. Measure the output power and frequency. If the transponder is equipped for long Mode S reply formats, repeat the test with 6 (9 if also equipped with the enhanced data link protocols) of the 18 Mode S interrogations requiring long replies.

Step 3 25 Millisecond Peak Reply Rate Capability (§2.2.3.4.2)

Set the transponder for a 15-pulse ATCRBS reply. Interrogate the transponder with periodic bursts of ATCRBS and Mode S interrogations as follows: 30 ATCRBS interrogations (25 if the equipment is intended for installation in aircraft that operate at altitudes not exceeding 15,000 feet) plus eight Mode S interrogations (requiring short replies), each type of interrogation burst approximately uniformly spaced within a single 25-millisecond interval, followed by a 975-millisecond interval without interrogations. Determine reply ratio for each type of interrogation. Measure output power and frequency. If the transponder is equipped for long Mode S reply formats, repeat the test with 4 (6 if also equipped with the enhanced data link protocols) of the 8 Mode S interrogations requiring long replies.

Step 4 1.6 Milliseconds Peak Reply Rate Capability (§2.2.3.4.1 and §2.2.3.4.2)

Repeat Step 3 with the following modification:

Use two ATCRBS interrogations plus four Mode S interrogations (with short replies), each type of interrogation approximately uniformly spaced within a single 1.6-millisecond interval, followed by a 998.4-millisecond interval with no interrogation. Determine reply ratio for each type of interrogation. Measure output power and frequency. If the transponder is so equipped repeat the test with two of the four Mode S interrogations having long replies.

2.4.2.2.5 ATCRBS Reply Rate Limiting (§2.2.7.3.1)

Equipment Required:

ATC Test Set (T-50-3A/4A (2 required), or equivalent).
Wide Band Dual Channel Oscilloscope (HP 1710B, or equivalent).
Frequency Counter (HP 5381A, or equivalent).

Measurement Procedure:

Connect the equipment as shown in Figure 2-27 and Figure 2-29.

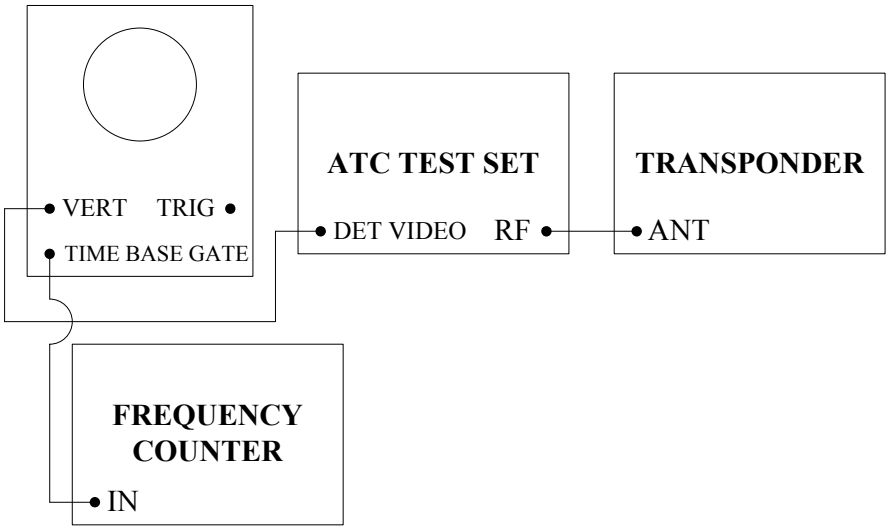

Figure 2-29: ?????

Step 1 Determination of Reply Rate Limit

Set the Mode A code to 0000. Interrogate the transponder on Mode A with a signal 20 dB above MTL at a variable rate starting at 500 per second. Gradually increase the interrogation rate while observing the reply count over 1-second intervals. The highest count observed is the reply rate limit. Verify that it does not exceed 2000 continuous replies per second.

Step 2 Sensitivity Reduction

Set the transponder's Mode C code to 0000 and its Mode A code to any value other than 0000. Interrogate the transponder with the sum of a) a Mode C interrogation 20 dB above MTL at a continuous rate equal to the reply rate limit determined in Step 1 and b.) a second unsynchronized Mode A interrogation 3 dB above MTL at a continuous rate equal to 50% of the reply rate limit determined in Step 1. Verify that the transponder replies to at least 90% of the interrogations at the signal level 20 dB above MTL and that it does not reply to more than 10% of the interrogations at the signal level 3 dB above MTL.

2.4.2.3 Reply Pulse Characteristics

2.4.2.3.1 ATCRBS Reply Pulse Characteristics (§2.2.4.1)

Equipment Required:

ATC Test Set (TIC T-50-3A/4A, or equivalent).
Wide Band Dual Channel Oscilloscope (HP 1710B, or equivalent).

Measurement Procedure:

Step 1 ATCRBS Reply Pulse Spacing (§2.2.4.1.1, §2.2.4.1.2, §2.2.4.1.5)

Connect the equipment as shown in Figure 2-26. Interrogate with a standard Mode A interrogation. Use a 14-pulse reply group (7777) and display the transmitted pulses on the wide band oscilloscope. Measure the spacing of each transmitted pulse with respect to the first framing pulse and the spacing between information pulses.

Step 2 ATCRBS Reply Pulse Shape (§2.2.4.1.4)

Using a standard ATCRBS Mode A interrogation, measure the duration of each reply pulse. Measure rise and decay times of each pulse. Measure the pulse amplitude variations of each pulse with respect to all other pulses in the reply train.

CAUTION: *If the detector is not known to be linear, checks should be made to determine what amplitude points on the detected pulse correspond to the 10 percent and 90 percent amplitude points of the RF pulses.*

In addition, checks should be made to determine the rise time of the detector.

Step 3 SPI Pulse (§2.2.4.1.3, §2.2.4.1.4 and §2.2.4.1.5)

Momentarily activate the SPI pulse control. Interrogate the transponder with a standard ATCRBS Mode-A interrogation. Measure the position of the SPI pulse with respect to the last framing pulse and the time the pulse remains in the reply train. Measure the width of the SPI pulse. With the SPI pulse activated, interrogate the transponder with a standard ATCRBS Mode-C interrogation. Verify that the SPI pulse is not present in the reply train.

2.4.2.3.2 ATCRBS Reply Delay and Jitter (§2.2.4.1.6)

Equipment Required:

ATC Test Set (TIC T-50-3A/4A, or equivalent).
Wide Band Dual Channel Oscilloscope (HP 1710B, or equivalent).

Measurement Procedure:

Step 1 Reply Delay (§2.2.4.1.6.a)

Connect the equipment as shown in Figure 2-26. Interrogate the transponder with a standard Mode A interrogation. Synchronize the oscilloscope using the leading edge of P_3.

Measure the average delay between the leading edge of P_3 and the leading edge of the first reply pulse at the 50 percent amplitude points when the

signal level is varied in increments of 5 dB between minimum triggering level and -21 dBm.

Step 2 Reply Jitter (§2.2.4.1.6.b)

Repeat Step l measuring the extreme positions of the leading edge of the first reply pulse at the various signal levels from 3 dB above minimum triggering level to -21 dBm.

Step 3 Reply Delay Variation (§2.2.4.1.6.c)

Repeat Step l using alternate Mode C and Mode A interrogations. Use signal levels from MTL +3 dB to -21 dBm. Measure the reply delay variation between modes.

2.4.2.3.3 Mode S Replies (§2.2.4.2)

Equipment Required:

ATC Test Set with P_4 Capability (TIC T-50-3A/4B, or equivalent).
Wide Band Dual Channel Oscilloscope (HP 1710B, or equivalent).

Measurement Procedure:

Step l Mode S Preamble (§2.2.4.2.1)

Connect the equipment as shown in Figure 2-26. Interrogate the transponder with a standard Mode A ATCRBS/Mode S All-Call. Display the Mode S reply on the oscilloscope. Measure the pulse duration of the first four reply pulses. Measure pulse spacing between the leading edge of the first and each of the second, third and fourth pulses.

Step 2 Mode S Reply Data Pulses (§2.2.4.2.2)

Note: *For Steps 2 through 6, examine pulses at the beginning, middle and end of the replies.*

Connect equipment as in Figure 2-26. Measure the pulse duration for both short and long reply pulses throughout the Mode S reply.

Measure the pulse spacing of the fifth reply pulse with reference to the first reply pulse.

Step 3 Mode S Reply Amplitude Variation (§2.2.4.2.3.a)

Connect the equipment as in Figure 2-26. Measure the maximum power differential between pulses in the Mode S reply.

Step 4 Mode S Reply Pulse Shape (§2.2.4.2.3.b)

Measure the rise time of the reply pulses.

CAUTION: *If the detector is not known to be linear, checks should be made to determine what amplitude points on the detected pulse correspond to the 10 percent and 90 percent amplitude points of the RF pulses. In addition, checks should be made to determine the rise and decay time of the detector.*

Step 5 Mode S Reply Pulse Shape (§2.2.4.2.3.c)

Repeat the measurement for decay time.

Step 6 Mode S Reply Pulse Spacing Tolerance (§2.2.4.2.4)

Connect equipment as in Figure 2-26. Determine that the leading edge of any reply pulse is within 50 nanoseconds of its assigned position.

Step 7 Mode S Reply Delay and Jitter (§2.2.4.2.5.a)[3]

Interrogate the transponder with a standard Mode S interrogation using any format for which a reply is required. Synchronize the oscilloscope to the interrogation. Measure the extreme positions of the leading edge of the first reply pulse, when the signal level is varied between 3 dB above the MTL and -21 dBm; and the delay between the P_6 sync phase reversal transient and the leading edge of the first reply pulse.

Step 8 ATCRBS/Mode S All-Call Reply Delay and Jitter (§2.2.4.2.5.b)

Interrogate the transponder with a standard ATCRBS/Mode S All Call interrogation. Synchronize the oscilloscope to the interrogation. Measure the extreme positions of the leading edge of the first reply pulse, when the signal level is varied between 3 dB above the MTL and -21 dBm; and the delay between the leading edge of P_4 and the leading edge of the first reply pulse.

2.4.2.3.4 Frequency Spectrum of Mode S Replies (§2.2.4.2.3.d)

Equipment Required:

Test Set with Mode S capability.
Spectrum Analyzer (HP 8535A, or equivalent).
Directional Coupler (HP 796D, or equivalent).

Measurement Procedure

Connect the equipment as shown in Figure 2-32. Set the transponder to the 7777 identification code. Interrogate the transponder with a standard Mode S surveillance-identity interrogation and observe the spectral response of the reply.

2.4.2.4 Side Lobe Suppression (§2.2.5 and §2.2.8.5)

Equipment Required:

ATC Test Set [T-50-3A/4A (2 required), or equivalent].
Wide Band Dual Channel Oscilloscope (HP 1710B, or equivalent).
3 Port Divider (Weinschel 1506, or equivalent).

[3] This test requires the Mode S test set described in §2.4.1.i. and a sufficiently accurate time-base marker generator. The total delay variation is only ±0.4%. Many oscilloscopes do not provide this accuracy. Auxiliary crystal referenced markers synchronous with the interrogation are required.

Measurement Procedure:

Step 1 SLS Decoding [§2.2.5.1.a (1) and (3), §2.2.5.1.b and §2.2.8.5]

Connect the equipment as shown in Figure 2-27. Interrogate the transponder with a standard Mode A interrogation including a P_2 pulse. RF signal level to be at MTL +3 dB; P_2 level = P_1 level. As the P_1 - P_2 spacing is varied over 1.0 to 3.0 microseconds, determine the reply efficiency. Adjust the P_1 - P_2 spacing to the nominal value and insert a 0.8 microsecond pulse (equal in amplitude to P_1 and P_2) such that it occurs 8 microseconds before P_2. Repeat with a 21-microsecond spacing between the inserted pulse and P_2. Verify that the reply ratio is less than 1 percent.

Step 2 SLS Dynamic Range [§2.2.5.1.a (2) and §2.2.5.1.c]

Repeat Step 1 at RF signal levels: -60 dBm, -40 dBm and -21 dBm.

Step 3 SLS Pulse Ratio (§2.2.5.1.b)

Repeat Step 1 at RF signal levels between MTL +3 dB, (-60 dBm, -40 dBm and -21 dBm). Set P_2 level 9 dB below P_1 level.

Step 4 SLS Pulse Ratio (§2.2.5.1 a and b)

Repeat Steps 1, 2 and 3 with an ATCRBS Mode A/Mode S All-Call interrogation (retaining the 8-microsecond spacing between P_1 and P_3, and add P_4).

Step 5 Suppression Duration [§2.2.5.1.d (l)]

Interrogate the transponder at 450 interrogations per second with a P_1 - P_2 pulse pair, followed after 50 microseconds by a P_1 - P_3 (Mode A, 8 microseconds) pulse pair. The interrogation level **shall** be set at -24 dBm, reply code selection is not consequential. Reduce the spacing of the P_1 - P_3 pair with respect to the P1 - P_2 pair until the transponder ceases to reply. The time interval between the leading edges of P_2 and P_1 (of the P_1 - P_3 pair) is the suppression duration S(8).

Repeat above procedure using Mode C (21-microsecond spacing) for the P_1 - P_3 pair. The result will be suppression duration S(21).

Step 6 Suppression Reinitiation [§2.2.5.1.d (3)]

Connect the equipment as shown in Figure 2-27. With an interrogation rate of 450 interrogations per second, generate a "first" P_1 - P_2 pair followed by a "second" P_1 - P_2 pair such that the spacing between P_2 of the first pair and P_1 of the second pair is S(8) +2 microseconds. Generate a “third” pair, P_1 - P_3, Mode A to follow the second pair after 50 microseconds. All pulse levels **shall** be set to -24 dBm; reply code is inconsequential. Reduce the spacing of the P_1 - P_3 pair in respect to the P_1 - P_2 pairs and determine suppression duration S(8) as in Step 4. Repeat the test using Mode C spacing for the P_1 - P_3 pair and determine suppression duration S(21).

Step 7 Recovery After Suppression [§2.2.5.1.d (4)

Repeat Step 5 using the following signal levels: P1 - P_2 pair: -30 dBm; P1 - P_3 pair: MTL. A reply efficiency of 90 percent should be observed when the P_2 (suppression) P_1 (interrogation) spacing is no more than one microsecond greater than S(8, 21) determined in previous steps.

Step 8 Low Signal Level Characteristics (§2.2.5.1.c)

Interrogate the transponder with a Mode A interrogation, including a P_2 pulse ($P_2 = P_1$ level). Vary the signal level from MTL to MTL +3 dB. Verify that the reply ratio does not exceed 10%.

2.4.2.5 Pulse Decoder Characteristics (§2.2.6)

Equipment Required:

ATC Test Set with P_4 Capability (TIC T-50-3A/4B, or equivalent).
Wide Band Dual Channel Oscilloscope (HP 1710B, or equivalent).
Mode S Transponder Test Set (Required for Steps 8 through 10).

Measurement Procedure:

Step 1 Pulse Level Tolerances, ATCRBS/Mode S All-Call (§2.2.6.1.1)

Connect the equipment as shown in Figure 2-26. Interrogate at the standard rate and at an input level 10 dB above MTL. Use an ATCRBS Mode A interrogation followed by a 1.6-microsecond P_4 pulse in its nominal position. Vary the level of the P_4 pulse between -10 and 0 dB with respect to P_3. Verify the changeover from ATCRBS to Mode S replies at the relative P_4 levels specified in §2.2.6.1.1.a and b.

Repeat the test at input signal levels -60, -40 and -21 dBm. Repeat the tests using an ATCRBS Mode C interrogation.

Step 2 Pulse Level Tolerances, ATCRBS-Only All-Call (§2.2.6.1.2)

Use setup and signal levels as in Step 1 above but employ a 0.8 microsecond P_4. Vary the level of the P_4 pulse between -10 and 0 dB with respect to P_3. Verify the changeover from ATCRBS replies to no replies at the relative P_4 levels specified in §2.2.6.1.2.a and b.

Repeat the test at input signal levels -60, -40 and -21 dBm. Repeat the tests using an ATCRBS Mode C interrogation.

Step 3 Pulse Position Tolerances, $P_1/_3$, ATCRBS-Type Interrogations (§2.2.6.2 a and b)

Use setup and signal levels as in Step l above. Interrogate with:

a. ATCRBS Mode A.
b. ATCRBS Mode C.
c. ATCRBS Mode A/Mode S All-Call.
d. ATCRBS Mode C/Mode S All-Call.
e. ATCRBS Mode A-Only All-Call.
f. ATCRBS Mode C-Only All-Call.

For each interrogation type vary the P_1 - P_3 spacing first within the required acceptance range (§2.2.6.2 a) and verify that the reply ratio is at least 90 percent. Then vary the P_1 - P_3 spacing to fall out of the permitted acceptance range (§2.2.6.2.b) and verify that not more than 10 percent of the replies are generated. There **shall** not be any replies to either of the ATCRBS-Only All-Call modes.

Step 4 Pulse Position Tolerances, P_4, ATCRBS/Mode S All-Calls (§2.2.6.2 a and c)

Use setup and signal levels as in Step 1 and interrogate with:

a. ATCRBS Mode A/Mode S All-Call.
b. ATCRBS Mode C/Mode S All-Call.

For both interrogation types, vary the P_3 - P_4 spacing first within the required acceptance range and then beyond the permitted acceptance range. Determine conformance to requirements as in Step 3.

Step 5 Pulse Duration Tolerances, ATCRBS Interrogations (§2.2.6.3 a and b)

Use setup and signal levels as in Step 1 above and interrogate with:

a. ATCRBS Mode A.
b. ATCRBS Mode C.

For both interrogation types, vary the P_1 duration first within the acceptance range (§2.2.6.3.a) and then beyond the acceptance range (§2.2.6.3.b). Verify reply ratio. Repeat test varying the P_3 duration in the same manner.

Step 6 Pulse Duration Tolerance, ATCRBS/Mode S All-Call (§2.2.6.3 a and b)

Use setup and signal levels as in Step 1 above and interrogate with:

a. ATCRBS Mode A/Mode S All-Call.
b. ATCRBS Mode C/Mode S All-Call.

For both interrogation types vary the P_1 duration first within the acceptance range (§2.2.6.3.a) and then beyond the acceptance range (§2.2.6.3.b). Verify reply ratio. Repeat test varying the P_3 duration in the same manner. Repeat test varying the P_4 in the same manner.

Step 7 Short Pulse Rejection, ATCRBS-Type Interrogations (§2.2.6.3.c)

Use setup as in Step 1 and set signal input level to MTL for each of the following interrogation types:

a. ATCRBS Mode A.
b. ATCRBS Mode C.
c. ATCRBS Mode A/Mode S All-Call.
d. ATCRBS Mode C/Mode S All-Call.

For each interrogation type vary the P_1 duration between 0.2 and 0.7 microsecond and verify that less than 10 percent of the replies are generated when the pulse has less than 0.3 microsecond duration. Repeat test varying the P_3 duration in the same manner. Repeat tests at 5 dB increments up to -45 dBm input level.

Step 8 Sync Phase Reversal Position Tolerance (From P_2) (§2.2.6.4)

Set the Mode S test set to generate a standard Mode S-Only All-Call interrogation at MTL +3 dB. Vary the spacing between the leading edge of P_2 and the P_6 sync phase reversal transient by ±200 nanoseconds from the nominal 2.75 microseconds. Measure the range over which Mode S replies are received. Repeat for P_1 levels between -50 dBm and -21 dBm in 5 dB steps.

Note: *Steps 8 and 9 require the Mode S Transponder Test Set.*

Step 9 Sync Phase Reversal Position Tolerance (From P_6) (§2.2.6.4)

Set the Mode S test set to generate a standard Mode S-Only All-Call interrogation at MTL +3 dB. Vary the spacing between the leading edge of P_6 and the P_6 sync phase reversal transient by ±200 nanoseconds from the nominal 1.25 microseconds. Measure the range over which Mode S replies are received. Repeat for P_1 levels of -50 dBm and -21 dBm in 5 dB steps.

Note: *Either Step 8 or Step 9 is to be used, depending on the design of the transponder.*

Step 10 Simultaneous Interrogations (§2.2.8.5)

Use setup, signal levels, and formats as in Step 5 above and insert a 0.8 microsecond pulse (equal in amplitude to P_1 and P_3) such that it occurs 8 microseconds before the P_3 pulse of a Mode C interrogation. Observe that all replies are Mode C replies.

2.4.2.6 Transponder Desensitization and Recovery (§2.2.7)

Equipment Required:

ATC Test Set [TIC T5OA-3A/4A (2 required), or equivalent].
Wide Band Dual Channel Oscilloscope (HP 1710B, or equivalent).
3 Port Power Divider (Weinschel 1506, or equivalent).
Mode S Transponder Test Set.

Measurement Procedure:

Step 1 ATCRBS Single Pulse Desensitization and Recovery (§2.2.7.1.1 and §2.2.7.2)

Connect the equipment as shown in Figure 2-27. Set the master test set to generate a single pulse not less than 0.7 microsecond wide at the standard ATCRBS interrogation rate and a power level equal to 50 dB above MTL. Set the slave test set to generate an ATCRBS Mode A interrogation delayed three (3) microseconds from the trailing edge of the single pulse. Determine the amplitude of the slave test set signal required to produce 90 percent reply efficiency. Repeat for master to slave test set delays of 6, 10 and 15 microseconds.

Note: *Steps 2 through 7 require replacement of one of the ATC test sets by a Mode S transponder test set.*

Step 2 Recovery from a Mode S Interrogation Requiring No Reply (§2.2.7.2.1)

With the equipment connected as shown in Figure 2-27, set the master test set to generate a short Mode S surveillance interrogation with broadcast address. Set the slave test set to generate an ATCRBS Mode A interrogation at a power level equal to 3 dB above MTL. Measure the delay time between the master and the slave test sets necessary to elicit a reply efficiency of 90%.

Step 3 Recovery from a Mode S Comm-C Interrogation (§2.2.7.2.1)

With equipment connected as shown in Figure 2-27, set the master set to generate the initial segment of a properly addressed Comm-C interrogation at a signal level of -21 dBm. Set the slave test set to generate an ATCRBS Mode A interrogation delayed 45 microseconds from the sync phase reversal of the master interrogation. Determine the amplitude of the slave test signal required to produce 90 percent reply efficiency.

Step 4 Recovery from a Suppression Pair or Unaccepted ATCRBS/Mode S or ATCRBS-Only All-Calls (§2.2.7.2.2 and §2.2.7.2.4)

With equipment connected as shown in Figure 2-27, set the master test set to generate a P_1 - P_2 pulse pair at the ATCRBS standard interrogation rate and a power level equal to -35 dBm. Set the slave test set to generate a Mode S-Only All-Call interrogation delayed 10 microseconds from the trailing edge of the P_2 pulse of the master test set interrogation. Determine the amplitude of the slave test set signal required to produce 90% reply efficiency.

Repeat the procedure with an ATCRBS-Only All-Call in place of the suppression pair. Set the Mode S-Only All-Call from the slave test set delayed 10 microseconds from the trailing edge of the P_4 pulse of the master test set interrogation.

Lock out transponder to All-Calls (non-selective) and repeat procedure with P_4-type All-Call interrogations in place of the suppression pair. Set the II field of the Mode S All-Call to a value other than ZERO (0) so that it will not be affected by the lock-out condition.

Step 5 Narrow Pulse Performance (§2.2.7.1.2)

With the equipment connected as shown in Figure 2-27, set the master test set to generate a single pulse less than 0.7 microsecond wide at the standard ATCRBS interrogation rate and a power level equal to 50 dB above MTL. Set the slave test set to generate an ATCRBS Mode A interrogation delayed three (3) microseconds from the trailing edge of the single pulse. Determine the amplitude of the slave test set signal required to produce 90 percent reply efficiency. Repeat for master to slave test set delays of 6, 10 and 15 microseconds.

Step 6 Dead Time (§2.2.7.2.5)

With the equipment connected as shown in Figure 2-27, set the master test set to generate an ATCRBS Mode A interrogation at a level of -21 dBm. Set the slave test set to generate a Mode S-Only All-Call interrogation at a level of 3 dB above MTL. Determine the time delay between the end of the reply to the master interrogation and the start of the slave interrogation that elicits a 90 percent reply efficiency from the transponder. Repeat with the master test set

generating a Mode S-Only All-Call at -21 dBm and the slave test set generating an ATCRBS Mode A interrogation at MTL +3 dB.

Step 7 Recovery From a Mode S Interrogation Which Has Not Been Accepted (§2.2.7.2.3)

Connect the equipment as shown in Figure 2-27. Set the master test set to generate a standard Mode S surveillance interrogation with an incorrect address. Set the slave test set to generate an ATCRBS/Mode A interrogation. Measure the delay time between the master and slave test sets necessary to elicit a reply efficiency of 90%.

2.4.2.7 Response to Interference (§2.2.8)

Equipment Required:

Mode S Transponder Test Set.
ATC Test Set (TIC T-50-3A/4A, or equivalent).
Wide Band Dual Channel Oscilloscope (HP 1710B, or equivalent).
3 Port Power Divider (Weinschel 1506, or equivalent).

Measurement Procedure:

With the equipment connected as shown in Figure 2-27, interrogate the transponder with the standard Mode S-Only All-Call interrogation at a signal level of -50 dBm and follow Steps l through 4 below.

Step 1 Low Level Asynchronous Interference (§2.2.8.1)

Insert a 0.8-microsecond wide pulse [defined in §2.4.1.i (ll)] with amplitude 12 dB below P_1 of the standard Mode S-Only All Call at a repetition rate of 10,000 Hz. Measure reply ratio. Repeat the test for all signal levels between -65 and -21 dBm in 5-dB increments.

Note: *Take care to avoid synchronization of the 10,000 Hz rate with the Mode S standard rate.*

Step 2 Standard Interference Pulse (§2.2.8.2) and Mode S SLS (§2.2.5.2)

Insert the interfering pulse (duration: 0.8 microsecond, level 6 dB below P_6) at a position l.8 microseconds after the leading edge of P_6 of a standard Mode S-Only All-Call.

Observe the reply ratio while slowly moving the interfering pulse from its initial position to the end of P_6. Repeat the test for all signal levels between -68 and -21 dBm in 5-dB increments.

Repeat the test with an interference pulse level 3 dB below the P_6 level.

Insert the interfering pulse (now acting as P_5) 0.85 microsecond after the leading edge of P_6 and use a level 3 dB above the level of P_6. Use signal levels between MTL +3 dB and -21 dBm in 5-dB increments. Reply ratio in all cases should be 10 percent or less (§2.2.5.2.a).

Reduce level of P_5 to a value 12 dB below the level of P_6 and repeat the test at signal levels from MTL +3 dB to -21 dBm in 5-dB increments. Reply ratio should be 99 percent or more (§2.2.5.2.b).

Step 3 Pulse Pair Interference (§2.2.8.3)

Insert a 0.8 microsecond pulse pair spaced 2.0 microseconds apart [§2.4.1.i(11)] with amplitude 9 dB below P_1 of the standard Mode S-Only All-Call, at a position such that the leading edge of the pulse pair occurs 0.25 microseconds after the leading edge of P_1.

Record the reply ratio while moving the interfering pulse pair in 0.25 microsecond steps from its initial position to a position 0.25 microseconds after the falling edge of P_6. Determine the average reply efficiency from the recorded values.

Repeat the test for all input levels between –68 dBm and –21 dBm in 5-dB increments.

Step 4 DME and JTIDS Interference Tests (§2.2.8.4)

Insert 3.5-microsecond wide pulse pairs spaced 12 microseconds apart with amplitudes of -30 dBm at a rate of 3,600 randomly spaced pulse pairs per second. Observe the reply ratio as the frequency of the interfering signal is varied over the ranges of 962 to 1020 MHz and 1041 to 1213 MHz.

Repeat the test using 3.5-microsecond wide pulse pairs spaced 30 microseconds apart.

Repeat the test using 6.4-microsecond wide pulse pairs at a random rate of 2000 pulses per second, with an amplitude of -80 dBm and a frequency of 1030 MHz.

Step 5 Response in the Presence of CW Interference (§2.2.8.6)

Interrogate the transponder with standard ATCRBS Mode A or Mode C interrogations having a signal level of –50 dBm.

Insert non-coherent CW interference at a frequency of 1030 ±0.2 MHz. and at signal levels of -70 dBm.

Verify that the transponder continues to reply to at least 90 percent of all interrogations.

Repeat the procedure using Mode S UF = 4, 5, 20 or 21 interrogations.

2.4.2.8 Undesired Replies (§2.2.9)

Equipment Required:

ATC Test Set (T-50-3A/4A, or equivalent).
Wide Band Dual Channel Oscilloscope (HP 1710B, or equivalent).
Frequency Counter (HP 5381A, or equivalent).

Measurement Procedure:

Step 1 Non-Interference Environment

Connect the equipment as shown in Figure 2-29. Set the ATC test set to ZERO interrogation rate. Set the oscilloscope to a total sweep time of 100 microseconds and the internal trigger to allow one sweep for each reply group transmitted by the transponder. Count the number of replies for a minimum of one minute. The squitter generation function may be disabled for this test.

Step 2 Random Trigger Rate (§2.2.9.1.b)

Repeat the procedure provided in Step 1 while injecting non-coherent CW interference at a frequency of 1030 ±0.2 MHz, and starting at a signal level of MTL –3 dB.

Count the number of replies for a minimum of one minute and verify that the reply rate does not exceed the limits specified in §2.2.9.1.b.

Repeat the procedure as needed while increasing the interference signal level MTL –3 dB to –24 dBm in 5 dB increments.

2.4.2.9 Self-Test and Monitors (§2.2.10)

Equipment Required:

ATC Test Set (TIC T-50-3A/4A, or equivalent).
Wide Band Dual Channel Oscilloscope (HP 1710B, or equivalent).
RF Attenuator (HP 394A, or equivalent).
ATC Transponder (Similar to unit under test - transmitter disabled).
Frequency Counter (HP 5381A, or equivalent).

Measurement Procedure:

Step 1 Self-Test Interrogation/Reply Rate (§2.2.10.1 a and c)

Connect the equipment as shown in Figure 2-29. Set the ATC test set to ZERO PRF, and the oscilloscope to a total sweep time of 50 microseconds, using internal trigger. Activate the self-test function (if provided) of the transponder under test and determine the reply rate to the self-test interrogation.

The squitter generation function may be disabled for this test.

Step 2 Self-Test Interrogation Level (§2.2.10.1.b)

Arrange coax connections as shown in Figure 2-30, position A. Activate the self-test function of the transponder and adjust the RF attenuator until the other transponder just triggers, as indicated by the presence of suppression pulses.

Without changing the RF attenuator setting, change the coax connections to position B. Set the ATC test set to the interrogation rate determined in Step 1 and interrogate in Mode A. Adjust the RF level of the ATC test set until transponder number two just triggers. Record the ATC test output level.

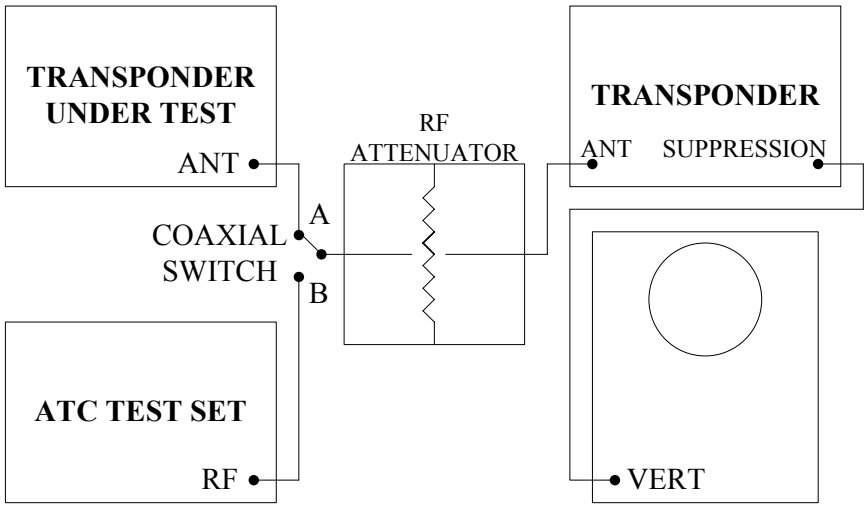

Figure 2-30: ?????

2.4.2.9.1 Squitter Monitor (§2.2.10.2)

A specific test procedure for this function is not described in this subsection. Such a test requires that the manufacturer artificially disable the squitter generation function. The detailed procedure for proving this capability must be left to the discretion of the manufacturer.

2.4.2.9.2 Failure Annunciator (§2.2.10.4)

As a minimum, the manufacturer must demonstrate that failures detected by the self-test or monitors are properly detected and that those failures cause the "valid" output to assume an invalid state.

2.4.2.10 Interference Suppression Pulse Response (§2.2.11)

Equipment Required:

ATC Test Set (TIC T-50-3A/4A, or equivalent).
Wide Band Dual Channel Oscilloscope (HP 1710B, or equivalent).

Measurement Procedure:

Connect the equipment as shown in Figure 2-31. Interrogate on Mode A at 150 interrogations per second and set the signal level to -21 dBm. Apply the suppression pulse for which the equipment is designed. Starting with a delay of more than 15 microseconds, adjust for minimum delay between the trailing edge of the suppression pulse and the leading edge of the interrogation pulse pair which provides 90 percent reply efficiency. Determine value of minimum delay.

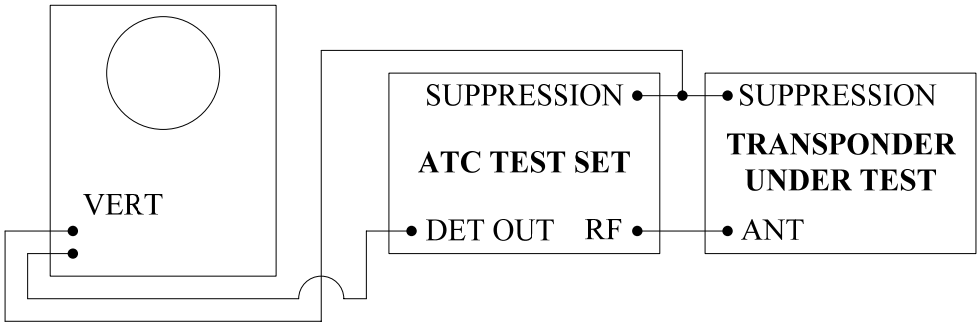

Figure 2-31: ?????

2.4.2.11 Diversity Operation (§2.2.12 and §2.2.22.d)

Equipment Required:

Two means of generating identical ATCRBS and Mode S interrogations that can be delayed from each other from 125 to 375 nanoseconds. These two generators must also have independent control of power level.

Means of determining the antenna terminal that generates the reply.

Means of determining the reply power level on both antennas simultaneously.

Means of determining reply delay for each channel and between channels.

Measurement Procedure:

Note: *Because the specifications for diversity operations are symmetrical in all respects, channels are arbitrarily designated A and B.*

Step 1 Single Channel Test (§2.2.12.3 and §2.2.12.4)

When measuring channel A and B parameters take care that any cables used for measurements are of equal length and equal loss. Interrogate channel A only, while monitoring channel A and B. At signal level MTL +3 dB use the following types of interrogations and record the listed observations:

ATCRBS Mode A.
ATCRBS Mode C.
ATCRBS Mode A/Mode S All-Call.
ATCRBS Mode C-only All-Call.
Mode S formats UF=4, 11, and if so equipped, 21.

For signal levels of -50 dBm and -21 dBm use an ATCRBS Mode C and a Mode S format of UF=4 types of interrogations and record the listed observations.

Observe:

Correct reply ratio.
Correct reply channel.
Power level of replies from channel A (§2.2.12.3).
Power level of replies from channel B (§2.2.12.3).

Record: Reply delay for each interrogation signal type and for the signal levels as specified.

Repeat the above test reversing channels.
Compare records of reply delays for conformance with §2.2.12.4.

Step 2 Selection Test (§2.2.12.1)

Synchronize the interrogations to channels A and B so that they are 0.125 +0.00/-0.04 microseconds apart where channel A is first.

Use an ATCRBS Mode C and a Mode S UF=4 to interrogate at a power level on channel A of MTL and a power level on channel B of MTL +3 dB.

Observe that 90 percent of the replies are on channel B.

Use an ATCRBS Mode C and a Mode S UF=4 to interrogate at a power level on channel A of MTL +3 dB and a power level on channel B of MTL.

Observe that 90 percent of the replies are on channel A.

Synchronize the interrogations to channels A and B so that they are 0.125 +0.00/-0.04 microseconds apart where channel B is first.

Use an ATCRBS Mode C and a Mode S UF=4 to interrogate at a power level on channel A of MTL and a power level on channel B of MTL +3 dB.

Observe that 90 percent of the replies are on channel B.

Use an ATCRBS Mode C and a Mode S UF=4 to interrogate at a power level on channel A of MTL +3 dB and a power level on channel B of MTL.

Observe that 90 percent of the replies are on channel A.

Step 3 Delay-Selection Test (§2.2.12.2)

Synchronize the interrogations to channels A and B so that they are 0.375 +.040/-0.00 microseconds apart where channel A is first.

Use an ATCRBS Mode C and a Mode S UF=4 to interrogate at a power level on channel A of MTL +3 and a power level on channel B of -50 dBm.

Observe that 90 percent of the replies are on channel A.

Synchronize the interrogations to channels A and B so that they are 0.375 +0.040/-0.00 microseconds apart where channel B is first.

Use an ATCRBS Mode C and a Mode S UF=4 to interrogate at a power level on channel A of -50 dBm and a power level on channel B of MTL +3.

Observe that 90 percent of the replies are on channel B.

Step 4 Squitter Antenna Selection (§2.2.12.5)

Activate the transponder and determine that squitter transmissions occur alternately from the two antennas at the prescribed rate.

2.4.2.12 Data Handling and Interfaces (§2.2.13)

The procedures outlined in this paragraph are intended only to test "data in" and "data out" requirements of the transponder. They do not constitute tests of the transponder's digital logic and protocols. Some tests correspond to requirements of optional features, and therefore are not applicable to all transponders.

2.4.2.12.1 Fixed Direct Data (§2.2.13.1.1)

Equipment Required:

Mode S Transponder Test Set (§2.4.1.i).

Measurement Procedure:

With the transponder RF port connected to the RF port of the Mode S transponder test set, perform the following test sequences.

Step 1 Mode S All-Call Addresses [§2.2.13.1.1.a (l)]

Interrogate the transponder with a Mode S-Only All-Call interrogation with PR, IC and CL Fields set to 0. Verify that the AA field of the transponder reply reflects the address which has been set into the transponder. Twenty-four different addresses consisting of 23 ZEROs and a single ONE **shall** be tested.

Step 2 Mode S Discrete Address [§2.2.13.1.1.a (2)]

Interrogate the transponder with a standard Mode S surveillance-altitude interrogation (UF=4) with the PC, RR, DI and SD fields set to 0 and an address consisting of ONE followed by 23 ZEROs. Verify that the transponder replies with appropriate bits set in the AP field when a like address is set into the transponder, and will not respond when each of the other combination of 23 ZEROs and a single ONE are entered as addresses.

Step 3 Maximum Airspeed (§2.2.13.1.1.b)

Interrogate the transponder with a short special surveillance interrogation (UF=0) with the AQ field set to 1. Verify that the RI field of the transponder reply corresponds to the airspeed code set into the transponder as each of the seven possible airspeed codes is used.

Step 4 Aircraft Identification Data (§2.2.13.1.1.c)

Appropriate test procedures are presented in §2.6.

Step 5 Invalid AA

Put the transponder in the Power Off Condition and set the AA to all ZEROs. Turn on the transponder and verify that a transponder error condition is set.

Note: *The transponder will normally either go into Standby State, revert to a pure Mode A/C transponder, or return to the Power Off Condition.*

Repeat this test with the AA set to ALL ONEs.

Put the transponder in the Power On Condition with an AA set to ONE (1) for the first bit and ZEROs for all other bits. Verify that the transponder functions normally as indicated in Steps 1 and 2.

Without putting the transponder in Power Off Condition change the AA to ALL ZEROs. Verify that the transponder generates a diagnostic error message for maintenance and that it keeps operating using the initial AA read during the power-on initialisation process (first bit set to ONE (1) and all other bits set to ZEROs).

Repeat this test with the AA set to ALL ONEs.

Repeat with the remaining twenty-three different transponder addresses each consisting of 23 ZEROs and a single ONE

2.4.2.12.2 Variable Direct Data (§2.2.13.1.2)

Equipment Required:

Mode S Transponder Test Set.
ATC Test Set (T-50-3A/4A, or equivalent).
Wide Band Dual Channel Oscilloscope (HP 1710B, or equivalent).

Step 1 Pressure Altitude (ATCRBS) [§2.2.13.1.2.a (l)]

Connect the equipment as shown in Figure 2-26. Interrogate the transponder with a standard ATCRBS Mode C interrogation. With the ALT switch on, set altitude code inputs to the transponder, which should result in setting each of the altitude bits in the reply one at a time. Verify proper positioning of these bits in the reply. Verify that only the framing pulses are present in the reply when the ALT switch is set to "off."

Step 2 4096 Identification Code (ATCRBS) (§2.2.13.1.2.b)

With equipment connected as in Step l, interrogate the transponder with a standard ATCRBS Mode A interrogation. Set identification codes which should result in the setting of each of the identification reply bits one at a time. Verify proper positioning of these bits in the reply.

Step 3 Pressure Altitude (Mode S) [§2.2.13.1.2.a (2)]

REPLACE WITH ED-73C §5.4.12.2 STEP 3. ←Step 4Identification Code (Mode S) (§2.2.13.1.2.b)

With the equipment connected as in Step 3, interrogate the transponder with a standard surveillance-identity interrogation (UF=5) with PC, RR, DI and SD fields set to ZERO (0) and the address the same as that provided to the transponder. Using the identity codes specified in Step 2, verify that the proper bit patterns exist in the ID field of the reply.

Step 5 Flight Status and Vertical Status (§2.2.13.1.2.c)

Interrogate with UF=0 and UF=16 and verify that the VS field is a ONE (1) when the "on-the-ground port" of the transponder is set to the on-the-ground condition. Also, verify that the VS field is a ZERO (0) otherwise.

Interrogate with formats UF=4, 5, 20, 21 and verify that the transponder follows the protocol of §2.2.14.4.14, and Figure 2-13.

Step 6 Aircraft Identification Data (§2.2.13.1.2.e)

Appropriate test procedures are presented in §2.6.

2.4.2.12.3 Standard Transaction Interfaces (§2.2.13.3)

Equipment Required:

Mode S Transponder Test Set.
Means of Inserting and Extracting Data at Transponder Interface Ports.
Means of Timing Transactions.

Measurement Procedures:

With the transponder RF port connected to the RF port of the Mode S Transponder Test Set, perform the following test sequences.

Step 1 Uplink Interface Information Content (§2.2.13.3.1 a and e)

Interrogate the transponder with valid Mode S interrogations of all uplink formats which the transponder is designed to accept, including broadcast interrogations. Verify that all fields (possibly excluding AP) of the interrogations are passed correctly through the transponder and except for UF=0, 11, 16, and 24 (when it is a request for a downlink ELM), appear at the uplink interface. Make additional valid interrogations with the uplink formats (excluding UF=11 and UF=24) and field content randomly chosen. Verify proper output of the uplink interface. Verify that broadcast interrogations are identified as such, either by AP content or by a special purpose code.

Step 2 Uplink Interface, "No-Storage Design" (§2.2.13.3.1.b)

Interrogate the transponder with valid Mode S interrogations of all uplink formats which the transponder is designed to accept. Verify that all data appear correctly at the uplink interface prior to the start of the transponder reply.

Step 3 Uplink Interface, "Storage Design" Acceptance Rate (§2.2.13.3.1.c)

Interrogate the transponder with valid Mode S interrogations (both short and long) at the rates and time periods specified in §2.2.3.4.2. Verify that all data appear correctly at the uplink interface.

Step 4 Uplink Interface, Nonacceptance (§2.2.13.3.1.d)

Interrogate the transponder with valid long Mode S interrogations at a rate exceeding the one specified in §2.2.3.4.2 for the longest time period. Verify that the transponder does not accept interrogations after the rate for which the transponder is designed. Also, verify that all data correctly appear at the uplink interface for all accepted interrogations.

Step 5 Downlink Interface, Information Content (§2.2.13.3.2.a)

Insert an all ONEs input. Interrogate the transponder with all uplink formats that it is designed to accept (one interrogation of each format, RR=16 for long interrogations). Verify that all bits in the transponder replies, not set by transponder protocol requirements, are ONE. Verify that all fields in the replies, set by transponder protocol, have the correct value.

Repeat this procedure with MB field data context 55 5555 5555 5555.

Step 6 Downlink Interface, "No-Storage Design" (§2.2.13.3.2.b)

Insert an all ONEs input. Interrogate the transponder with a standard Comm-A, altitude interrogation. Verify that data are inserted into the transponder at the proper time, and that the transponder reply contains the proper data.

Step 7 Downlink Interface, "Storage Design" Buffer Rate, Buffer Function (§2.2.13.3.2.c)

Set up a sequence of Comm-B replies with the value of the last 48 bits of MB of each reply set to the number of the reply in the sequence (e.g., MB=1 for first reply). Interrogate the transponder with a standard Comm-A, altitude interrogation at the rates specified for long interrogations in §2.2.3.4. Verify that the replies include the proper data in the MB field. Repeat with RR equal to all valid codes from 16 through 18.

Step 8 Downlink Interface, Unavailable Data (§2.2.13.3.2.e)

Disconnect all inputs from the transponder's downlink interface port. Interrogate the transponder with a standard Comm-A, altitude interrogation containing RR=16. Verify that the reply contains ALL ZEROs in the MB field. Repeat with all RR codes from 17 through 31, noting that:

- For RR code 17, bits of the MB field of the reply excluding bits 1-8, 24, 26- 36 are set to ZEROs (bits 1-8, 24, 26- 36 are or may eventually be set by the transponder itself when no interface is availble).

- For RR code 18, the reply contains all ZEROs excluding bits 1 – 8, in the MB field if the aircraft identification consists of variable direct data, or the tail number if the aircraft identification consists of fixed direct data.

- For RR code 19, bits 9-56 of the MB field of the reply are set to ZEROs.

- For RR codes 20 through 31, verify that the reply contains ALL ZEROs in the MB field.

2.4.2.12.4 ELM Service Interfaces (§2.2.20.1.4 and §2.2.20.1.2)

Equipment Required:

Mode S Transponder Test Set.
Transponder ELM Data Link Device.

Measurement Procedure:

Connect the transponder RF port to the RF port of the Mode S transponder test set. Connect the Mode S transponder test set of the ELM data link device to the ELM interface port of the transponder and perform the following sequences.

Step 1 ELM Uplink Interface, Data Rate (§2.2.20.1.4)

Interrogate the transponder with four 16-segment uplink ELMs (each segment having unique coding, interrogations spaced 50 microseconds apart, and a new 16-segment ELM starting 5 milliseconds after the previous ELM). After 4 seconds for transponders equipped for standard ELM operation or after 1 second for transponders equipped for enhanced uplink ELM operation, interrogate the transponder with another set of four 16-segment ELMs. Verify that the correct data appears at the ELM interface no later than one second after completion of the corresponding uplink ELM for both interrogation sequences. Verify that the interface reports an interrogator identity code of ZERO.

Step 2 ELM Uplink Interface, Interrogator Identification (§2.2.20.1.2)

Repeat the procedures of Step 1 using the multisite protocol. Use different Interrogator Identifier codes and verify that they are correctly reported at the interface.

Step 3 ELM Downlink Interface, Data Rate (§2.2.20.2.4 and §2.2.3.5)

Set up a downlink ELM which conforms to the maximum capability of the transponder (each segment with unique coding) on the Mode S transponder test set or ELM data link device. Interrogate the transponder with a Comm-C (UF=24) with RC=3 and SRS= "ALL ONEs." Verify that all segments are properly transmitted 136 ±1 microseconds apart.

2.4.2.12.5 Interface Integrity Testing (§2.2.13.2.2)

Compliance with this requirement **shall** be demonstrated either by direct test in a simulated operational environment or by analysis based on the known characteristics of proven interface techniques.

2.4.2.12.6 Comm-B Downlink Interface, Message Cancellation (§2.2.20.2.2)

Step 1 Cancellation Before Transmission

Insert a Comm-B message into the downlink interface for transmission. Interrogate the transponder with UF=4, 5, 20 and 21 and verify that the DR code in its replies is set to ONE (1). Cancel the message via the interface, interrogate again and verify that the DR code is now not ONE (1).

Step 2 Cancellation After Transmission

Insert message as in Step 1, interrogate and extract message as in §2.2.19.1.12.4, using RR=16. Cancel message via the interface, interrogate again to verify that that DR is now not ONE (1).

Step 3 Cancellation in Multisite Environment

Prepare two messages of differing content, m1 and m2, for insertion into the interface. Insert m1 as in Step 1 and extract using the multisite protocol (RR=16, DI=1, IIS>0, MBS=1). Cancel m1 via the interface and verify that DR is not 1 and that the UM field does not show a Comm-B reservation. After that verification, and within less than 15 seconds, insert m2 into the interface and extract using the multisite protocol with different IIS. Verify that the second message has been extracted and close out the transaction using DI=1, IIS as for m2, MBS=2 (see §2.2.19.2.3.3). Verify that DR is not 1 and that the UM field does not show a Comm-B reservation.

Note: *This two-message sequence is needed to verify that a complete cancellation has been achieved by way of the interface.*

Step 4 Cancellation Within a Queue

If the interface is designed to store more than one message in the transponder, where one message is ready to be transmitted and other messages are queued for subsequent transmission, the following test must be performed.

Insert the maximum number of messages into the transponder and cancel one of the messages that is not scheduled for immediate transmission. Extract all messages and verify that the cancelled message does not appear. Repeat for each possible message location in the queue.

2.4.2.12.7 Downlink ELM Interface, Message Cancellation (§2.2.20.2.2)

Step 1 Cancellation Before Transmission

Insert an ELM message occupying as many segments as the transponder will permit into the downlink interface for transmission. Interrogate the transponder with UF=4, 5, 20 and 21 and verify that the DR code in its replies is larger than 16 and reflects the number of inserted segments correctly. Cancel the message via the interface, interrogate again, and verify that the DR code is now not larger than 16.

Step 2 Cancellation After Transmission

Insert message as in Step 1, interrogate and extract message as in §2.2.20.2.1.1.2, using RC=3. Cancel message via the interface, interrogate again to verify that DR is now not larger than 16.

2.5 Test Procedures for the Surveillance and Communications Protocols

2.5.1 Introduction

This subsection includes tests to verify the transponder's processing functions. (The tests described in Subsection 2.4 verify transponder performance as a receiver and transmitter of signals.) The nature of these processing tests is such that some means of automatically controlling, sequencing and evaluating the tests is necessary if the tests are to be practical. It is assumed that an automatic capability is available for executing these tests. The only exception is a technique for manual testing of Mode S parity, which is included as a simple procedure for verifying the proper implementation of the parity codes.

Transponder States:

Upon receipt of an interrogation, the action of a Mode S transponder is dependent upon the interrogation type and format, and the "state" of the transponder at the time of receipt. The address of the interrogation must be correct, the format must be one the transponder is equipped to receive, and the reply format requested must be within the capability of the transponder. If all of the above criteria are met, and if the transponder is not locked out to the interrogator identity, the interrogation will be accepted. The content of the reply will depend not only on the content of the interrogation but also on control inputs to the transponder, such as Alert and SPI, and on data existing at the transponder interfaces such as the altitude code and waiting messages.

The overall state of a Level 1 transponder is determined by the status of 19 timers: Suppression, Lockout, Alert, SPI, and 15 selective lockout timers.

Data link transponders have additional possible states defined by data link reservation timers and the condition of link protocol status registers.

A Level 1 transponder could receive $2^{56} \approx 7x10^{16}$ different interrogation patterns, of which about 33 million must be accepted because they are of the correct address and format. Of these, about 200 require that a correct reply, as specified in Subsection §2.2 of this document, be returned. The corresponding numbers for data link transponders are proportionally larger.

Certain interrogation patterns are illogical and should never be transmitted by an interrogator. It is also physically impossible for certain combinations of timer and register conditions to occur simultaneously in a correctly functioning transponder. However, if any illogical interrogation pattern is inadvertently transmitted, the transponder must not respond inappropriately or transition to an improper state. Thus, tests are included to subject the transponder to specific illogical interrogation patterns to verify that it reacts as specified in Subsection §2.2.

Logic Tests:

Many of the specifications of Subsection §2.2 involve "sufficient condition" logic. That is, taken in the context of the entire document, the statement “On receipt of PC=1 the transponder **shall** be locked out," means: "If and only if PC=1, the transponder **shall** be locked out." The tests then must verify that PC=1 causes the lockout state, and also that other signals (some of which may include other messages in the same location used for the PC field) do not cause this state.

Exhaustive tests would have to combine all possible interrogation patterns with all possible transponder states; verify that the transponder takes the specified action for specified combinations of interrogation patterns and transponder states; and verify that it takes no action for all other combinations.

The number of possible state-pattern combinations makes it impossible to perform exhaustive tests within a reasonable time period. A practical test procedure separates required tests into two categories: Positive tests and negative tests.

Positive tests verify that the transponder acts as required by the specifications in Subsection §2.2 and the accompanying flowcharts. For example, PC=1 received in the correct format must cause lockout for the specified time.

Negative tests verify that the transponder does not react to unspecified codes or patterns. For example PC=1 must not cause lockout.

The positive tests included are exhaustive in the sense that every action specified in Subsection §2.2 is tested. Negative tests have been chosen according to the seriousness of a possible malfunction. For example, negative tests of the lockout protocol are important because a malfunction can make the transponder invisible to a sensor. Thus, all PC codes are tested.

Tests for Data Flow:

Data flow must also be verified. However, totally exhaustive testing of data flow is not practical. Tests for data flow cannot be clearly classified as positive or negative. They are designed such that all connections between input and transponder action are verified. The procedures are intended to identify the most probable failure modes.

Accuracy of data transfer by the transponder in either direction is verified by these tests. That is, message patterns entering must be identical with message patterns leaving the transponder.

Scope of Tests:

The tests will verify that the functions required by the text in Subsection §2.2 are carried out regardless of the design approach.

2.5.2 Required Test Equipment

The test equipment described here is required for all procedures except Procedure #1.

2.5.2.1 Automatic Test Controller

The controller **shall** be capable of sequencing the test procedures and analyzing the content of the transponder's responses. Program instructions for the controller must be generated by the user according to the procedures of §2.5.4 and the instructions of §2.5.3.b.

2.5.2.2 Signal Generator

The signal generator **shall**:

a. Generate nominal (§2.1.11.3 and §2.1.11.4) waveforms for ATCRBS and Mode S interrogations.

b. Be capable of a continuous interrogation rate of 50/sec (Some tests for a TCAS-compatible transponder require 60/sec.).

c. Be capable of a peak interrogation rate of 2500/sec (§2.2.3.4.2).

d. Have a parity generator (§2.2.18.2.1.c and Figure 2-9).

e. Have means to accept control commands for:

(l) The type of interrogations to be made (ATCRBS A, C; ATCRBS/Mode S All-Call; ATCRBS-Only All-Call; Mode S formats).

(2) The value (ONE or ZERO) for each bit in a Mode S interrogation, excluding the bits in the AP field.

(3) The value (ONE or ZERO) for each bit of the Mode S address.

(4) The timing of the interrogation.

f. Generate interrogation signal levels of -60 and 0 dBm.

2.5.2.3 Reply Receiver

The reply receiver **shall**:

a. Accept all ATCRBS replies and pass on their content to the controller.

b. Accept all Mode S replies, carry out the decoding function for AP or PI (Figure 2-10), and pass on the reply content and the decoded address or the interrogator identity to the controller.

2.5.2.4 Interface Adapter

The interface adapter **shall** be able to transfer information content between all applicable interfaces and the controller in either direction.

Some tests require the use of equipment that simulates certain functions of a TCAS unit. The simulation equipment should enable the transponder to send and receive data on the TCAS/transponder interface using appropriate interface protocols and response times appropriate for an actual TCAS operating with the TCAS/transponder interface. The simulation equipment should allow specific bit configurations to be sent to the transponder and allow for information received from the transponder to be examined.

Note: *Interface designs are not standardized, and therefore can range from one universal interface to several separate interfaces for direct and indirect data. Interfaces for some functions (4096, SPI, etc.) may not be electrically accessible and would thus require manual setting.*

2.5.3 Selection and Use of the Test Procedures

a. Selection

Given the range of possible transponder designs and capabilities, the test procedures of §2.5.4 must be chosen to match the transponder. Test procedures are included for:

Transponder	Reference	Procedures
Minimum Data Link Transponder	§2.2.19.1	2 to 23&29, excluding 18A
Data Link ELM-C Transponder	§2.2.20.1.1	2 to 25&29, excluding 18A
Data Link ELM-C/D Transponder	§2.2.20.2.1	2 to 29, excluding 18A
Enhanced Data Link Transponder	§2.2.21	2 to 29, excluding 18
TCAS Compatible Transponder	§2.2.22	30 to 39

The Error Protection Test (Procedure #1) is used to verify the correct operation of the error protection circuitry of the test equipment and the transponder. Its initial application is recommended.

b. Use

The test procedures in §2.5.4 constitute a detailed set of program instructions for the test controller.

The procedures describe a set of interrogation sequences and replies that must be carried out to verify one specific operation, protocol or action of the transponder. The number of required transactions (interrogation-reply pairs) may vary depending on the transponder design (for example, for diversity transponders, all tests must be applied to both channels) and the details of the controller instructions. The number of verifications is fixed for each transponder design.

Since each procedure sequence tests only one specific transponder action, it is possible to combine transactions such that more than one transponder action is tested. For example, while interrogation-reply protocols are being verified, the content of the interrogations can also be checked to verify reply content.

It is not required that the described sequences follow consecutively. Transactions of one sequence may be used to bring the transponder into a state required for another sequence. Other tests may be executed while waiting for timer runout.

The transponder is required to reply to at least 99% of valid interrogations in the Mode S format and to at least 90% in the ATCRBS format. Reinterrogation capability must be provided for instances of non-reply. Given the large number of transactions carried out during these tests, a valid reason for rejection would be a reply failure rate, cumulatively recorded, that exceeds the specified rate.

2.5.4 Test Procedures

2.5.4.1 Procedure #1 Error Protection

(§2.2.18.2.1.c)

The correct function of the two coding-parity processes in the transponder can be automatically verified by a hardware circuit in the test generator, designed according to Figure 2-10. The test set (signal generator/analyzer) carries out the correct encoding process. A transponder will recognize the correct address and will in turn correctly generate the AP and PI fields.

It is also possible to observe the function of the transponder's and test set's error protection circuits if the AP pattern resulting from known text and address is known. However, since the correct values of 24 bits must be verified from an oscilloscope presentation, the deciphering of the phase reversals in the uplink P_6 or the relative pulse positions in the downlink becomes laborious.

Patterns for the AP field exist that are easily distinguished in an oscilloscope presentation. Combinations of text (the bit stream before the AP or PI fields) and address exist for which AP and PI consist of ALL ZEROs or of another easily recognizable and verifiable pattern. They are presented here.

<u>Equipment Required:</u>

Test set capable of generating Mode S interrogations at a 0-dBm power level.

DPSK modulation detector (a simple diode detector is adequate for manual determination of the location of phase reversals in a 0-dBm signal).

Wide-band oscilloscope (HP1710B, or equivalent).

Verification of Transponder's Downlink Encoding Circuit for PI

At the transponder's address setting interface, set addresses shown in the following list, depending on the internal CA report:

If CA=0, set AA to 03 13 D4 hex.
If CA=4, set AA to 03 2B E2 hex.
If CA=5, set AA to FC DF EB hex.
If CA=6, set AA to 03 37 F9 hex.
If CA=7, set AA to FC C3 F0 hex.

Interrogate with the ATCRBS/Mode S All-Call and verify that in the reply PI is ALL ZEROs.

Note: *This test verifies the transponder's downlink encoder without relying on the correct operation of the Mode S test set.*

Verification of Test Set Error Protection Circuits

Connect the diode detector and oscilloscope to the RF output of the test set and generate a signal strong enough to register on the oscilloscope. Synchronize with the test set interrogation rate and observe the shape of the resulting P_6 pulse. The phase transitions within P_6 will cause amplitude modulation that can be easily observed. The following combinations of texts and interrogation addresses AA will result in AP as shown:

UF=4, all fields = 0, AA = CO 51 F6 hex : AP = all ZEROs.
UF=4, all fields = 0, AA = 3F AB F2 hex : AP = AA AA AA hex.
UF=20, all fields = 0, AA = AC C5 55 hex : AP = all ZEROs.
UF=20, all fields = 0, AA = 53 3F 51 hex : AP = AA AA AA hex.

Verification of Transponder's Downlink Encoding Circuits for AP

Couple the modulation detector into the RF connection between the test set and transponder so that the transponder's reply waveform can be observed. Interrogate the transponder so that the following reply formats are generated and observe the reply pulses on the oscilloscope:

DF=5, all fields = 0, AA = 2078CE hex : AP = all ZEROs.
DF=5, all fields = 0, AA = 752D9B hex : AP = 55 5555 hex.
DF=21, all fields = 0, AA = 0B154F hex : AP = all ZEROs.
DF=21, all fields = 0, AA = 5E 401A hex : AP = 55 5555 hex.

2.5.4.2 Procedure #2 Interrogation Acceptance Test

(§2.2.18.2.2 – acceptance, Level 1 transponder)
(Figure 2-11 – flowchart, Level 1 transponder)
(§2.2.18.2.3 – coordination, Level 1 transponder)
(§2.2.18.2.2 – acceptance, minimum data link transponder)
(Figure 2-16 – flowchart, all data link transponders)
(§2.2.19.1.4 – coordination, minimum data link transponder)
(§2.2.20.1.1 – coordination, ELM)

Interrogation-Reply Coordination, ATCRBS and ATCRBS/Mode S All-Call

Interrogate transponder with:

ATCRBS Mode A.
ATCRBS Mode C.
ATCRBS Mode A/Mode S All-Call.
ATCRBS Mode C/Mode S All-Call.
ATCRBS Mode A-Only All-Call.
ATCRBS Mode C-Only All-Call.

Repeat all the above and include the P_2 suppression pulse.

Verify: Proper reply and reply format or no reply, as required.

Interrogation-Reply Coordination, Mode S Formats (P_6-Formats)

Interrogate transponder with all Mode S formats: UF=0 to UF=24.

For UF=0, 16 use both RL codes 0 and 1.
For UF=4, 5, 20, 21 use all RR codes 0 through 31.
For UF=24, use RC=2 in order to get a reply. For UF=11, use interrogation address FF FFFF hex.
For all other interrogations, use the interrogation address to which the transponder has been set.

Verify: Proper reply and reply format as required for this transponder design.

Proper non-reply to unspecified formats and uplink formats for which the transponder is not equipped.

Proper non-reply if the transponder design cannot generate the reply format demanded by RR or RL.

Non-acceptance conditions not covered in this test are verified elsewhere as follows:

Buffers full – §2.5.4.15
Wrong Address – §2.5.4.9
Broadcast but short format – §2.5.4.16
Lockout – §2.5.4.3 and §2.5.4.4
PR function, stochastic – §2.5.4.5

2.5.4.3 Procedure #3 CA Verification

(§2.2.14.4.6)

A separate test sequence is not required.

Verification must be made during the interrogation acceptance test (§2.5.4.2) and whenever a squitter is encountered.

CA=7 is verified for cases with the following transponder settings: DR not ZERO, DR=0 and FS=2, DR=0 and FS=3, DR=0 and FS=4, DR=0 and FS=5.

2.5.4.4 Procedure #4 Non-Selective Lockout Tests

(§2.2.18.2.4)

Non-selective lockout is initiated on receipt of a correctly addressed interrogation UF=4, 5, 20, 21 containing PC=1 or LOS=1 together with IIS=0. This starts the T_D timer which holds the lockout condition for 18 ±1.0 seconds.

Non-selective Lockout applies to both (8 and 21 microseconds) ATCRBS/Mode S All-Calls and to UF=11 with IC and CL=0.

The lockout state is verified by interrogating with the locked-out All-Call types and by observing that a reply is not generated.

The lockout duration is verified by interrogation with the locked-out All-Call types 100 milliseconds before the earliest permissible timer runout and by observing that a reply is not generated.

The lockout termination is verified by interrogation with the locked-out All-Call types 100 milliseconds after the latest permissible timer runout and by observing that a reply is generated.

The timer restart feature is verified by transmitting a second lockout command while the lockout is still in effect and by observing that lockout termination occurs after the latest permissible timer runout reckoned from the last lockout command.

Negative tests verify that interrogation patterns not specifically designated as lockout commands do not cause a lockout condition in the transponder, and that lockout affects only the specified formats.

2.5.4.4.1 Positive Tests

Interrogate with UF=4, PC=1.

Verify: Lockout state, lockout duration, lockout termination.

Repeat with UF=5, PC=1 for Level 1 transponder. Repeat with UF=5, UF=20, UF=21 and PC=1 for all other designs.

Repeat, using LOS=1 with IIS=0 as the lockout command.

Recommended Test Sequence:

Item	Time (sec)	Action
A	0	Interrogate with UF=4, PC=1.
B	0.02	Verify lockout with ATCRBS Mode A/Mode S.
C	0.04	Verify lockout with ATCRBS Mode C/Mode S.
D	0.06	Verify lockout with UF=11, PR=0, IC=0, CL=0.
E	16.9	Repeat items B, C, D.
F	19.1	Verify termination with All-Call.
G	19.12	Verify termination with ATCRBS Mode C/Mode S.
H	19.14	Verify termination with UF=11, PR=0, IC=0, CL=0.
I	21.0	Interrogate with UF=5, PC=1.
J	21.02	Verify as in items B, C, D.
K	26.0	Interrogate with UF=20, PC=1.
L	26.02	Verify as in items B, C, D.
M	31.0	Interrogate with UF=21, PC=1.
N	31.02	Verify as in items B, C, D.
O	41.9	Verify as in items B, C, D.
P	46.9	Verify as in items B, C, D.
Q	50.1	Verify termination as in items F, G, H.

Note: *This sequence must be modified for Level 1 transponders, because they do not accept long interrogations.*

2.5.4.4.2 Required Negative Tests

a. PC Discrimination

The interrogation patterns are:

UF = 4, 5, 20, 21.
PC = 0 and DI≠3,
PC= 0 and DI=3 and LSS=1 and SIS=0,
PC = 1 and DI=3,
PC = 2, 3, 4, 5, 6. 7.

Total number of patterns = 36.

With the transponder not in non-selective lockout state, interrogate with all of the above patterns consecutively. Verify that, after the sequence, the non-selective lockout state does not exist.

b. Broadcast Discrimination

The interrogation patterns are:

UF = 4, 5, 20, 21.
PC = 0, 1, 2, 3, 4, 5, 6, 7.
IIS = 0
LOS= 1

Address = Broadcast (FF FFFF hex).
Total number of patterns = 32.

With the transponder not in non-selective lockout state, interrogate with all patterns consecutively. Verify that, after the sequence, the non-selective lockout state does not exist.

c. Address Discrimination

The interrogation patterns are:

UF = 4, 5, 20, 21.
PC = 1.

Address: not for this transponder.
Total number of patterns = 4.

With the transponder not in non-selective lockout state, interrogate with all of the above patterns. Verify that, after the sequence, the non-selective lockout state does not exist.

d. II and SI Discrimination

The interrogation patterns are:

UF = 11.
PR = 0.
CL = 0 through 1, with IC = 1 through 15
CL = 2 through 4, with IC = 0 through 15.

Total number of patterns = 78.

With the transponder in non-selective lockout state, interrogate with all of the above patterns and verify that the corresponding II or SI code is not locked out.

e. All-Call Discrimination

This test verifies that the lockout state applies only to All-Call formats and not to ATCRBS or discrete interrogations. The interrogation patterns are:

All non-All-Call formats for which the transponder is designed (Procedure #2 – §2.5.4.2).

With the transponder in non-selective lockout state, interrogate with all of the above patterns and verify that they are not locked out.

2.5.4.5 Procedure #5 Selective Lockout Tests

(§2.2.18.2.5)

Selective lockout is initiated on receipt of a correctly addressed interrogation UF=4, 5, 20, or 21 containing DI=1, 7; LOS=1 and IIS from 1 to 15, or DI=3, LSS=1 and SIS from 1 to 63. This starts the T_L timer associated with the received II or SI code and holds the lockout condition for 18 ±1.0 seconds.

Selective lockout applies only to UF=11 with II or SI corresponding to the running T_L timer.

The lockout state, duration, termination and restart are defined and tested as described in §2.5.4.4. Negative tests follow the same procedures and have the same purpose as described in §2.5.4.4.

Pattern Definition for Level 1 Transponders

Positive Interrogation Patterns Per Timer

UF: 2 codes.
DI: 2 codes with LOS=1 or 1 code with LSS=1. Total: 4 patterns for II timers, 2 patterns for SI timers starting lockout.

Total Interrogation Patterns Per Timer

UF: 2 codes.
DI: 2 codes with LOS=0,1; 1 code with LSS=0, 1
5 codes with SD field bits 23 & 26 = 1
Total: 20 possible patterns for II timers, 18 possible patterns for SI timers.

Positive test patterns: 2 or 4.
Negative test patterns: 16.

Pattern Definition of All Other Transponder Designs

Positive Interrogation Patterns Per Timer

UF: 4 codes.
DI: 2 codes with LOS=1 or 1 code with LSS=1.
Total: 8 patterns for II timers, or 4 patterns for SI timers starting lockout.

Total Interrogation Patterns Per Timer

UF: 4 codes.
DI: 2 codes with LOS= 0,1; 1 code with LSS=0,1;
5 codes with SD field bits 23 & 26 = 1
Total: 40 possible patterns for II timers, 36 possible patterns for SI timers.

Positive test patterns: 4 or 8.
Negative test pattern: 32.

Note: *The 8 negative test patterns per UF code are as follows: For each value of DI (0 – 7) set the IIS or SIS code correctly. For DI code values where there is no IIS or SIS subfield within the SD field, set the corresponding bits (bits 17-20 for IIS or 17-22 for SIS). If DI=1 or 7, set LOS=0, for all other values of DI, set bit 26=1. If DI=3, set LSS=0, for all other values of DI, set bit 23=1.*

Test Sequence

Because 78 timers, each running 18 ±1.0 seconds, are involved, a test sequence is shown here that minimizes the time needed, while providing a comprehensive validation of transponder performance.

Principle of Test Sequence

A lockout timer is started by a surveillance or Comm-A interrogation and with the next interrogation, the lockout state is verified for UF=11 with the corresponding II or SI. Just before the earliest and just after the latest timer runout duration, lockout and non-lockout state is verified.

Timer intervals must be interlaced to verify their independence and to save time.

The requirement that each timer can be restarted while running must also be verified.

Test #1 Multisite, T_L Timer and Lockout: Timer Duration and Insensitivity to Non-Valid Signals (All Transponders)

Time (sec)	Action
0.0	Start timer with UF=4.
0.02	Verify lockout to timer's II or SI with UF=11.
0.04 to 1.62	Verify non-lockout to all other non-locked out IIS and SIS (times 0.9 and 1.1 will be used for the last 2 steps of the sequence for timers started previously with interlace, see *note* below).
2.0	Start next timer for interlace.
3.64	Try timer restart with correct IIS or SIS and incorrect DI-LOS and DI-LSS combinations (DI:0 – 7 = 8 combinations) (see *note* above).
16.9	Verify lockout to timer's II or SI with UF=11.
19.1	Verify non-lockout.

If the last test fails, the timer either runs too long or has been restarted by a non-valid signal.

Note: *Test #1 provides the basic timing of a test sequence that satisfies the principles of the test procedure while maintaining a maximum of 50 interrogations per second. Because the test sequence calls for interlacing multisite lockout timers (in this case one is started every 2 seconds), the above sequence will need to accommodate the critical timer verifications that occur at 16.9 and 19.1 seconds relative to the start of each timer. When the test sequence reaches 16.9 and 19.1 seconds after the start of each timer it will be 0.9 and 1.1 after the start of a new timer. Priority is given to verify the lockout of the earlier timer at the correct time, while the verification of non-lockout to all other timers is scheduled around these critical measurements.*

Test #2 Multisite T_L Timer and Lockout: Restart Capability and Sensitivity to All Valid Formats (All Transponder)

Time (sec)	Action
0.0	Start timer with UF=4.
0.02	Verify lockout to timer's II or SI.
4.5	Restart timer with UF=5.
21.4	Verify lockout for timer's II or SI.
23.6	Verify non-lockout for timer's II or SI.

Interlace all timers in approximately 0.3-second intervals.

For Level 2 transponders and above, alternate using UF=4 and UF=20 interrogations to start the timers, and alternate using UF=5 and UF=21 interrogations to restart timers.

If the test at 21.4 seconds fails, the timer has not been restarted.

2.5.4.6 Procedure #6 Squitter Verification

(Subparagraph §2.2.18.2.6)

The squitter function of the transponder **shall** be tested to verify that the transponder correctly generates squitters at the proper rate and with the proper content. Squitters will occur randomly throughout operation of all test procedures. Squitters should be noted by the reply receiver and the test controller as unsolicited replies. Provisions should be made in the test setup to detect squitters, both acquisition and Extended Squitters, and verify their content and rate. If a squitter is detected during the operation of any of the test procedures in this document, the procedure should delay the next scheduled interrogation so that it doesn't overlap the squitter and go undetected by the transponder. The following subparagraphs contain test procedures and expected results that vary according to the aircraft installation for which the transponder is designed, those that support automatic detection of on-the-ground status and those that do not. If a transponder design allows either installation type, the test procedure should be conducted with the transponder switched to support automatic on-the-ground detection and repeated with the transponder switched for installation without automatic on-the-ground detection. If the transponder implements a manual switch to the pilots as per §2.1.7.b to disable the transponder from replying to ATCRBS, ATCRBS/Mode S All Call and Mode S-only All Call interrogations, verify for the following tests that this switch has no effect to Acquisition and Extended Squitter transmissions. Verify that the switch has no effect to CA coding and Extended Squitter format selection.

2.5.4.6.1 Acquisition Squitter Verification

The following test **shall** verify proper transmission of Acquisition squitters when the transponder is not transmitting Extended Squitters. The following tests **shall** be conducted with no external data input to the Extended Squitter GICB registers.

Step 1: Setup the transponder to airborne status. The Acquisition squitter transmission **shall** be verified to be uniformly distributed between 0.8 and 1.2 seconds with a time quantization less than or equal to 15 milliseconds. The test setup will require measuring the time difference between successive Acquisition squitters. The time interval measured between successive Acquisition squitters **shall** be counted in individual 15 millisecond bins between 0.8 and 1.2 seconds. Validation of the proper quantization is achieved upon receipt of at least one Acquisition squitter in each 15 millisecond time bin between 0.8 and 1.2 seconds. Improper times are those occurring outside of the time bins between 0.8 and 1.2 seconds. Verify that the Acquisition squitters are uniformly distributed over the interval between 0.8 and 1.2 seconds.

Step 2: Verify the content of the CA, AA and PI fields. For diversity transponders, verify that the squitters occur alternately from both channels. For transponders that are designed for aircraft installations with automatic means of determining on-the-ground condition, when the transponder is in on-the-

ground status, verify that Acquisition squitters occur on the top antenna only at the prescribed rate.

2.5.4.6.2 Extended Squitter Verification

Extended squitters occur randomly at rates determined by internal states of the transponder. Each Extended Squitter type must be separately verified for content, rate and antenna selection which are dependent upon transponder air/ground state and Extended Squitter ground station interrogations. The selection of airborne or surface position formats are dependent upon determination of on-the-ground status and ground station control via interrogation content. The following tests **shall** be performed to verify proper operation of the transponder Extended Squitter functions. The external data sources for Extended Squitter loading **shall** be connected via the appropriate interfaces.

2.5.4.6.2.1 Extended Squitter Rate Verification

Extended squitter transmission rate **shall** be verified to be uniformly distributed as specified for each Extended Squitter type in §2.2.23.3. The time quantization for each Extended Squitter type **shall** also be verified to be less than or equal to 15 milliseconds. The test setup will require measuring the time difference between successive Extended Squitters of the same type. The time interval measured between successive Extended Squitters of the same type **shall** be counted in individual 15 millisecond bins between the minimum and maximum interval specified in §2.2.23.3. Validation of the proper quantization is achieved upon receipt of at least one Extended Squitter in each 15 millisecond time bin in the time interval specified. Improper times are those occurring outside of the time bins within the specified time interval. Verify that the Extended Squitters are uniformly distributed over the specified time interval. Verify the content of the CA, AA and PI fields. For diversity transponders, setup the transponder to transmit airborne format Extended Squitters. Verify that each Extended Squitter type identified in §2.2.23.1.2 occur alternately from both channels. For transponders that are designed for aircraft installations with automatic means of determining on-the-ground condition, set the transponder to on-the-ground status and verify that Extended Squitters occur on the top antenna only at the prescribed rates.

2.5.4.6.2.2 Extended Squitter Protocol Verification

The following test verifies the transponder properly transmits Extended Squitters according to the protocol specified in §2.2.23.1.

Verify the content of the CA, AA and PI fields of all Extended Squitter replies. For the following test, connect the transponder to the appropriate source that provides altitude code input to the transponder. Also, as required, setup to provide Extended Squitter data to ground initiated Comm-B Registers 05_{16}, 06_{16}, 07_{16}, 08_{16}, 09_{16} and $0A_{16}$ through an external interface as specified in §2.2.13.2.

Unless otherwise noted, for the following steps, setup the transponder to not inhibit Acquisition squitters and to report barometric pressure altitude in the airborne position report (subfield ATS equals ZERO). For transponders that support automatic detection of air/ground state, setup the transponder to airborne state.

<u>Step 1</u> Disable altitude code and all other Extended Squitter data into the transponder. Set the ALT switch to the “off” position. Upon power-up

initialization of the transponder, verify that the transponder broadcasts Acquisition squitters but does not broadcast Extended Squitters. Interrogate the transponder with ground initiated Comm-B requests with RR=16, DI=7 and RRS=5, 6, 7 and 9 respectively. Verify that the MB field of the corresponding replies are ZERO. Set the ALT switch to the "on" position. Verify that the transponder continues to broadcast Acquisition squitters but does not broadcast Extended Squitters.

Step 2 Set the ALT switch to the "on" position and provide altitude code input to the transponder. After power-up initialization, verify that the transponder does not broadcast Extended Squitters. Interrogate the transponder with ground initiated Comm-B requests with RR=16, DI=7 and RRS=5, 6, 9 and 10 respectively. Verify that the altitude is ZERO in the airborne position report and remaining bits are ZERO. Verify that the MB field of the remaining replies are ZERO. Interrogate the transponder with UF=4, RR=17 and DI≠7 and verify that the SCS subfield of the data link capability report is ZERO. Verify that the transponder broadcasts Acquisition squitters.

Step 3 Provide Extended Squitter updates to the transponder at a one half second rate. Include updates to GICB Registers 05_{16}, 06_{16}, 07_{16}, 08_{16} and 09_{16}. Use other than ZERO or ALL ONEs for the airborne position report, aircraft identification report, and the airborne velocity report. Verify that the transponder broadcasts airborne position squitters, airborne identification squitters and airborne velocity squitters at the proper rate and the ME data content matches the data stored in GICB Register 05_{16}, 08_{16} and 09_{16}, respectively. Verify that the SSS and ACS subfields of the airborne position squitter are correct. Interrogate the transponder with ground initiated Comm-B requests with RR=16, DI=7 and RRS=5, 6, 7, 8 and 9, respectively. Verify that the MB field contains the proper data. Repeat except vary the data content of each GICB and verify the data content of each Extended Squitter subsequent to each register update. Interrogate the transponder with RR=17 and DI≠7 and verify that the SCS subfield of the data link capability report is one.

Step 4 Setup the transponder as in Step 3 with Extended Squitter updates to the transponder at a one half second rate. Place the transponder in the airborne state. Stop updates of all Extended Squitter data, except altitude information, to the transponder for GICB Registers 05_{16}, 06_{16}, 07_{16}, 08_{16} and 09_{16}. Verify that after 2 seconds, all subsequent Extended Squitter ME fields (GICB Registers 07_{16} and 09_{16}) are ZERO with the exception of the ACS field in the airborne position squitter (GICB Register 05_{16}) and the airborne identification squitter (GICB Register 08_{16}). Place the transponder in the ground state and verify that the surface position Extended Squitter ME field (GICB Register 06_{16}) is ZERO. Repeat the setup as in Step 3 with Extended Squitter updates to the transponder at a one half second rate. Place the transponder in the airborne state. Interrogate the transponder with RR=17 and DI=7 and verify that the SCS subfield of the data link capability report is one. After all updates (except altitude information) have ceased for 10 seconds, interrogate to extract the data link capability report and verify that the SCS subfield is ZERO. Interrogate the transponder with ground initiated Comm-B requests with RR=16, DI=7 and RRS=5, 6, 7, 8 and 9 respectively. Verify that the MB fields are ZERO with the exception of the ACS field in the airborne position squitter (GICB Register 05_{16}) and the airborne identification squitter (GICB Register 08_{16}). After all updates (except altitude information) have ceased for 60 seconds, verify that airborne identification and airborne velocity Extended Squitters are no longer transmitted. Place the transponder in the ground state and verify that the surface position Extended Squitter (GICB Register 06_{16}) is no longer transmitted. Return the transponder to the

airborne state. Verify that the acquisition squitter and airborne position squitter are broadcast. Set the ALT switch to the "off" position. Verify that the ME field of the airborne position squitter is ZERO. After 60 seconds, verify that the transponder no longer broadcasts airborne position squitters.

Step 5 Setup the transponder as in step 3 and provide Extended Squitter updates to the transponder at a one half second rate. Stop update of GICB Registers 05_{16} and 06_{16} only. After 2 seconds, verify that the ME field of the airborne position squitter is ZERO with the exception of the ACS subfield. Verify that the transponder broadcasts airborne position, aircraft identification and airborne velocity squitters at the proper rate and the ME data content matches the data stored in GICB Registers 05_{16}, 08_{16} and 09_{16}, respectively. Interrogate with RR=16, DI=7 and RRS=5, 6, 8 and 9 and verify the MB fields matches the ME field in the corresponding Extended Squitter reply. After 10 seconds, interrogate to extract the data link capability report and verify that SCS is ZERO. After 60 seconds, verify that airborne position squitters are still transmitted.

Set the ALT switch to the “off” position. Verify that the ME field of the airborne position squitter is ZERO. After 60 seconds, verify that the transponder no longer broadcasts airborne position squitters. Verify that aircraft identification and airborne velocity squitters are transmitted throughout the test at the proper rate and with the correct data content.

Step 6 Set the ALT switch to the “on” position and provide altitude code input to the transponder. Provide Extended Squitter updates to the transponder at a one half second rate. Include updates to GICB Registers 05_{16}, 06_{16}, 07_{16}, 08_{16} and 09_{16}. Verify that the ME fields of the airborne position, velocity and aircraft identification squitters match the data input. Stop updates of Extended Squitter data to the transponder for GICB Registers 08_{16} and 09_{16} only. After 2 seconds, verify that the ME field of the airborne velocity squitter is ZERO. Interrogate with RR=16, DI=7 and RRS=5, 6, 8 and 9 and verify that the MB fields match the ME fields in the corresponding Extended Squitter reply. After 10 seconds, interrogate to extract the data link capability report and verify that SCS is one. After 60 seconds, verify that airborne position reports are still transmitted and that aircraft identification and airborne velocity squitters are not transmitted.

Step 7 Configure the transponder to inhibit Acquisition squitters when Extended Squitters are broadcast. Prior to providing Extended Squitter updates, verify that Acquisition squitters are broadcast. Provide Extended Squitter updates at a one half second rate to GICB Registers 05_{16}, 06_{16} and 08_{16} and provide altitude code input to the transponder. Verify that Extended Squitters are broadcast and Acquisition squitters are not broadcast. Verify that airborne position and aircraft identification squitters are broadcast at the proper rate and alternately on the top and bottom antenna ports as specified for airborne state if antenna diversity is supported. Additionally provide updates to GICB Register 09_{16}. Verify the broadcast of airborne position squitters, aircraft identification squitters and airborne velocity squitters at the proper rate and the ME data content matches the data stored in GICB Registers 05_{16}, 08_{16} and 09_{16}, respectively. Verify that the transponder does not broadcast Acquisition squitters.

Set the ALT switch to the “off” position and stop update to GICB Registers 05_{16}, 06_{16}, 08_{16} and 09_{16}. After 2 seconds, verify that the ME fields of the airborne position and airborne velocity squitters are ZERO. Interrogate with UF=4, RR=16, DI=7 and RRS=5, 6, 8 and 9, respectively. Verify that the

MB fields of the replies match the data of the corresponding Extended Squitter reply. After 60 seconds, verify that Extended Squitter transmissions stop and the transponder resumes Acquisition squitter broadcast.

Repeat above sequence except stop update to GICB Registers 05_{16} and 06_{16} only. After 2 seconds, verify that the ME field of the airborne position report is ZERO. After 60 seconds, verify that the transponder no longer broadcasts airborne position squitters and continues to broadcast airborne velocity and aircraft identification squitters. Verify that the transponder continues to inhibit the broadcast of Acquisition squitters.

Repeat above except stop update to GICB Register 09_{16} only. Again, verify that after 2 seconds the ME field of the airborne velocity squitter is ZERO and after 60 seconds, both airborne velocity and Acquisition squitters are not transmitted.

Step 8 Input GICB Register $0A_{16}$ and verify that an event-driven Extended Squitter is generated with the proper data content. Update GICB Register $0A_{16}$ at a rate less than twice every second. Verify that an event-driven Extended Squitter is generated subsequent to each update with the proper data content. Vary the data content provided externally to the transponder and verify that the data content subsequent to update of the event-driven report is correct. Increase the update rate to exceed twice per second. Verify that the event-driven squitter rate does not exceed twice per second and that the data content reflects the most recent update contents.

For the following steps, for those transponders that support automatic detection of on-the-ground status, change the transponder to on-the-ground status. Configure the transponder to not inhibit Acquisition squitters when Extended Squitters are broadcast.

Step 9 Upon power-up initialization of the transponder, verify that the transponder broadcasts Acquisition squitters at the proper rate but does not broadcast Extended Squitters. For transponders that support automatic detection of on-the-ground status and diversity, verify that Acquisition squitters occur on the top antenna port only. Interrogate the transponder with GICB requests with RR=16, DI=7 and RRS=5, 6, 8 and 9 respectively. Verify that the MB field of the corresponding replies are ZERO.

Step 10 Provide Extended Squitter updates to the transponder at a half second rate. Include updates to GICB Registers 05_{16}, 06_{16}, 08_{16} and 09_{16}. Use other than ZERO or all ONEs for the surface position report and the aircraft identification report. Set TRS to ZERO. For transponders that support automatic on-the-ground detection, perform the following:

1. Verify that the transponder broadcasts surface position squitters at the high rate and the ME data content matches the data stored in GICB Register 06_{16}.

2. Verify that the transponder broadcasts aircraft identification squitters and occur uniformly over the range of 4.8 to 5.2 seconds as specified in §2.2.23.1.3.d. Verify that the ME data content matches the data stored in GICB Register 08_{16}.

3. Verify that the transponder does not broadcast the airborne position and the airborne velocity squitter.

4. Verify that the transponder does not broadcast Acquisition squitters.

5. Stop update of GICB Registers 05_{16}, 06_{16}, 08_{16} and 09_{16}. After 2 seconds, verify that the surface position squitter ME field is ZERO. After 60 seconds, verify that surface position and aircraft identification squitters stop and Acquisition squitters resume.

For transponders that do not support automatic on-the-ground detection, verify that airborne position squitters, airborne velocity squitters and aircraft identification squitters are transmitted at the proper rate and data content. Verify that surface position squitters are not emitted. Verify that the transponder broadcasts Acquisition squitters at the proper rate.

Repeat except vary the data content of GICB Registers 06_{16} and 08_{16} and verify the data content of each Extended Squitter subsequent to each register update.

Step 11 For transponders that support automatic on-the-ground detection and can determine surface squitter rate, repeat step 10 with TRS set to 1 and verify that the surface position and aircraft identification squitters occur at the high rate. Change TRS to 2 and repeat except verify that the surface position squitter switches to the low rate and aircraft identification squitters occur uniformly over the range 9.8 to 10.2 seconds as specified in §2.2.23.1.3.d.

In all of the above steps, interrogate the transponder with a ground-initiated Comm-B request containing RR=16, DI=7 and RRS=7 and verify that the TRS and ATS subfields are reported properly.

2.5.4.6.3 Squitter Control Verification

Squitter operation is dependent upon control from Extended Squitter ground stations from interrogation content of the SD field. SD data can command the transponder to broadcast surface position squitters and control surface Extended Squitter rate and surface squitter antenna selection.

Step 1 Squitter Type Control

Provide pressure altitude data and Extended Squitter updates to the transponder through the appropriate external interface. Include updates to GICB Registers 05_{16}, 06_{16}, 08_{16} and 09_{16}. Use other than ZERO or all ones for the corresponding GICB registers. Update the registers at a half second rate to prevent time out of these registers. Set TRS to ZERO and for those transponders that support automatic on-the-ground detection, set the transponder to airborne state. Throughout the following step, verify that CA remains equal to 5 for transponders that support automatic on-the-ground detection; otherwise verify CA remains equal to 6. Verify that the transponder continues broadcast of Acquisition squitters throughout the test.

Interrogate the transponder with UF=4, PC and RR=0, DI=2, TCS=1, RCS=2, SAS=0. Verify that the transponder broadcasts surface position and aircraft identification squitters for 15 seconds at the low rate and does not broadcast airborne position squitters. Verify that after the 15 second interval the transponder reverts to broadcast of the airborne position squitter and resumes broadcast of the aircraft identification squitter at the high rate. Repeat using an interrogation as above except set TCS=2 and verify that the transponder broadcasts surface position and aircraft identification squitters at the low rate for 60 seconds. After the 60 second interval, verify that the

transponder reverts to broadcast of airborne position squitters and resumes broadcast of aircraft identification squitters at the high rate.

Interrogate the transponder with UF=4, PC and RR=0, DI=2, TCS=1, RCS=2, SAS=0. Verify that the transponder broadcasts surface position and aircraft identification squitters for 15 seconds at the low rate and does not broadcast airborne position squitters. Prior to the timeout of the 15 second interval, repeat interrogation. Verify that the transponder continues broadcast of the surface position squitter for another 15 seconds from the second interrogation. Repeat using an interrogation as above except set TCS=2 and verify that the transponder broadcasts surface position squitters at the low rate for 60 seconds and prior to the timeout of the 60 second interval, repeat interrogation. Verify that the surface position squitters continue for another 60 seconds from the second interrogation.

Repeat first interrogation and within 1 second interval, interrogate with same interrogation except set TCS=3. Verify that the transponder stops broadcast of the surface position squitter and resumes broadcast of the airborne position squitter. Verify that aircraft identification squitters are broadcast at the high rate. Interrogate the transponder with UF=4, PC and RR=0, DI=2, TCS=0, RCS=0, SAS=0. Verify that the transponder continues to broadcast airborne position squitters at the proper rate. Repeat last interrogation with TCS=3, 4, 5, 6, 7 and verify that the transponder correctly broadcasts airborne Extended Squitters at the proper rate and does not broadcast surface position Extended Squitters.

Perform the following for transponders that support automatic on-the-ground detection. Set the transponder to on-the-ground status. Set TRS to ZERO. Interrogate the transponder with UF=4, PC and RR=0, DI=2, TCS=1, RCS=2, SAS=0. Verify that the transponder broadcasts surface position and aircraft identification squitters for 15 seconds at the low rate. Verify that the transponder resumes broadcast of the surface position squitter after the 15-second interval. Verify that the surface position and aircraft identification squitters occur at the high rate. Repeat using an interrogation as above and after one second, switch the transponder to airborne state. Verify that the transponder broadcasts surface position squitters at the low rate for the full 15-second interval. After the 15 seconds, verify that the transponder broadcasts airborne position squitters at the proper rate.

Step 2 Squitter Rate Control

With the equipment connected as specified in Step 1, set TRS to ZERO and for transponders that support automatic on-the-ground detection, set the transponder to airborne state. Except as otherwise noted, verify that the Acquisition squitter is broadcast throughout the following step at the proper rate.

Interrogate the transponder with UF=4, PC and RR=0, DI=2, TCS=2, RCS=1 and SAS=0. Verify that the transponder broadcasts surface position squitters for 60 seconds at the high rate and does not broadcast airborne position squitters. Verify that after the 60-second interval the transponder reverts to broadcast of the airborne position squitter.

Repeat above procedure except prior to the 60 second interval, repeat the interrogation with TCS=2 and RCS=1 and verify that the transponder continues to transmit surface position squitters another 60 seconds after which the transponder reverts to airborne position squitter transmission. Interrogate the transponder with UF=4, PC and RR=0, DI=2, TCS=0, RCS=1

and SAS=0. Verify that the transponder continues to broadcast airborne position squitters at the proper rate. Repeat last interrogation with TCS=3-7 and verify that the transponder correctly continues to broadcasts airborne position squitters at the proper rate after each interrogation.

Interrogate the transponder with UF=4, PC and RR=0, DI=2, TCS=1, RCS=2, SAS=0. Verify that the transponder broadcasts surface position squitters for 15 seconds at the low rate and does not broadcast airborne position squitters. Verify that aircraft identification squitters occur at the low rate. Verify that after the 15-second interval the transponder reverts to broadcast of the airborne position squitter at the high rate and aircraft identification squitters occur uniformly over the range 4.8 to 5.2 seconds as specified in §2.2.23.1.3.d. Repeat using an interrogation as above except set TCS=2. Verify that the transponder broadcasts surface position squitters at the low rate for 60 seconds and reverts to airborne position squitters after the 60-second interval. Also, verify that aircraft identification squitters occur uniformly over the range 9.8 to 10.2 seconds for the 60-second interval and resumes broadcast at the high rate after the 60-second interval.

Interrogate the transponder with UF=4, PC and RR=0, DI=2, TCS=1, RCS=1, SAS=0. Follow this interrogation within 1 second with the same interrogation except set TCS=0 and RCS=3. Verify that the transponder stops broadcast of surface squitters (surface position and aircraft identification squitters) and after 15 seconds resumes broadcast of the airborne position squitter. Repeat the first interrogation and this time follow within 1 second with TCS=0 and RCS=4. Verify that the transponder again stops broadcast of surface squitters and after 15 seconds resumes broadcast of the airborne position squitter.

The following verifies that the RCS subfield has no effect when the transponder is not transmitting surface position squitters. Interrogate the transponder with UF=4, PC and RR=0, DI=2, TCS=0, RCS=1, SAS=0. Verify that the transponder continues the broadcast of the airborne position and aircraft identification squitters at the proper rates. Repeat above except set RCS=2, 3, 4, 5, 6 and 7, respectively and verify that the transponder continues broadcast of the airborne position and aircraft identification squitters at the proper rates following each interrogation.

The following verifies that unassigned RCS codes have no effect when the transponder is transmitting surface position squitters. Interrogate the transponder with UF=4, PC and RR=0, DI=2, TCS=2, RCS=0, SAS=0. Verify that the transponder broadcasts surface squitters at the proper rates. Repeat the interrogation except set TCS=0 and RCS=5, 6 and 7, respectively and verify that the transponder continues broadcast of surface position squitters at the proper rate following each interrogation.

Interrogate the transponder with UF=4, PC and RR=0, DI=2, TCS=2, RCS=1, SAS=0. Follow this interrogation within 1 second with the same interrogation except set TCS=0 and RCS=3. Verify that the transponder stops broadcast of surface squitters. Prior to 60 seconds from the first interrogation, repeat the first interrogation except set RCS=0. Verify that the transponder resumes broadcast of the surface position squitter after 60 seconds from the second interrogation.

Interrogate the transponder with UF=4, PC and RR =0, DI=2, TCS=2, RCS=1, SAS=0 to again set the transponder to transmit surface position squitters. Follow this interrogation after 30 seconds with the same

interrogation except set TCS=0 and RCS=4. Verify that the transponder stops broadcast of surface squitters. Repeat the first interrogation with RCS=0 within 60 seconds of the first interrogation to prevent timeout of the surface position squitter format and repeat 60 seconds later. After 120 seconds from the second interrogation, verify that the transponder resumes broadcast of the surface position squitter.

Interrogate the transponder with UF=4, PC and RR=0, DI=2, TCS=2, RCS=1, SAS=0. Follow this interrogation within 1 second with the same interrogation except set TCS=0 and RCS=3. Verify that the transponder stops broadcast of surface squitters. Prior to 60 seconds from the first interrogation, repeat the first interrogation. Verify that the transponder immediately resumes broadcast of the surface position squitter at the high rate for 60 seconds.

Perform the following for transponders that support automatic on-the-ground detection. Set TRS to ZERO and set the transponder to on-the-ground status. Verify that Acquisition squitters are not broadcast. Interrogate the transponder with UF=4, PC and RR=0, DI=2, TCS=0, RCS=3 and SAS=0. Verify that the transponder stops broadcast of surface squitters for 60 seconds and Acquisition squitters are broadcast. After 60 seconds, verify that the transponder resumes broadcast of surface squitters at the high rate and stops transmission of Acquisition squitters. Repeat interrogation except set RCS=4. Verify that the transponder stops broadcast of surface squitters and broadcasts Acquisition squitters for 120 seconds. After 120 seconds, verify that Acquisition squitters are no longer broadcast and the transponder resumes broadcast of surface squitters at the high rate. Repeat interrogation as above except set RCS=0, 5, 6 and 7 delaying 120 seconds between interrogations. Verify that the transponder correctly continues broadcasting surface position squitters at the high rate.

Step 3 Squitter Antenna Control

The following procedure verifies that the transponder correctly broadcasts surface Extended Squitters and Acquisition squitters on the proper antenna ports as commanded by the SAS subfield. For transponders that do not support antenna diversity, verify that the SAS commands have no impact on Acquisition or Extended Squitter transmissions.

With the equipment connected as specified in Step 1, set TRS to ZERO and for transponders that support automatic on-the-ground detection, set the transponder to on-the-ground status. For transponders that support automatic detection of on-the-ground condition, verify that the transponder broadcasts surface Extended Squitters on the top antenna only and. Verify that the transponder does not broadcast Acquisition squitters.

Interrogate the transponder with UF=4, PC and RR=0, DI=2, TCS=0, RCS=0, SAS=0. For transponders that do not support automatic detection of on-the-ground status, verify that the following interrogations have no impact to Extended Squitter and Acquisition squitter transmissions. Otherwise, verify that the transponder broadcasts extended and Acquisition squitters on the top antenna only. Repeat interrogation except set SAS=1. Verify that each Extended Squitter type and Acquisition squitters occur alternately on the top and bottom antennas. After 120 seconds, verify that the transponder broadcasts extended and Acquisition squitters from the top antenna only. Repeat interrogation except set SAS=2. Verify that the transponder broadcasts extended and Acquisition squitters for 120 seconds from the bottom antenna only. After the 120-second interval, verify that the

transponder resumes broadcasting extended and Acquisition squitters from the top antenna only. Repeat interrogation except with SAS=1 followed by an interrogation 10 seconds later with SAS=3. After the second interrogation, verify that the transponder resumes broadcasting extended and Acquisition squitters from the top antenna only.

Repeat above procedure for transponders that support automatic on-the-ground detection except set the transponder to airborne state and verify that the SAS commands have no effect on Acquisition and Extended Squitter transmissions and squitters are broadcast alternately on top and bottom antenna ports.

Repeat above procedure except command the transponder to report surface Extended Squitters via UF=4, PC and RR=0, DI=2, TCS=2, RCS=0 interrogations every 60 seconds to maintain surface squitter transmissions. Setup transponders that support automatic on-the-ground detection to airborne state. Verify that the SAS command properly controls antenna port selection for each Extended Squitter types as specified for each SAS value and that the SAS commands have no effect on Acquisition squitter transmissions.

2.5.4.7 Procedure #7 FS and VS Protocol/Code Tests

The following procedure verifies the FS, VS and SSS protocol and verifies proper coding. The FS and SSS codes are dependent upon Alert conditions input to the transponder. The FS, VS and also the CA codes are dependent upon the automatically determined on-the-ground condition input to the transponder for installations so equipped.

If a manual switch is provided to the pilots as per §2.1.7.b to disable the transponder from replying to ATCRBS, ATCRBS/Mode S All Call, and Mode S-only All Call interrogations, verify that this switch has no effect to the on-the-ground status determination of the aircraft for the following tests.

(§2.2.14.4.14 – FS code).
(§2.2.14.4.42 – VS code).
(§2.2.23.1.8 – SSS code).
(§2.2.13.1.2.c, §2.2.18.2.7 – protocol).
(§2.2.18.2.11 – interface).
(Figure 2-13 – Flowchart).

This procedure verifies the proper operation of the FS and VS protocols and codes.

Transponder States

A = Alert Register set.
B = T_C timer runs = 16 states, independent.
C = T_L timer runs.
D = Ground Register set.

Interrogation Patterns for the Level 1 Transponder

UF=4, 5 with RR=0 = 3 patterns.
UF=0.

Interrogation Patterns for All Other Transponders

UF=4, 5, 20, 21 with RR=0 and 16 through 31.
UF=0, 16 = 70 patterns.

Transaction Summary

Level 1 Transponder: 48 transactions.
All Other Transponders: 1120 transactions.

Required Code Verification Test

Observe that the FS code follows the transponder states as specified in §2.2.14.4.14 and verify that VS=1, if and only if the "on-the-ground" input is active.

Note: *The Alert Register is set when the manual or interface input to the ID function is 7500, 7600, 7700.*

The T_C timer is started when the input to the ID function is changed.

The T_I timer is started when manual or interface input exists for SPI momentarily.

The Ground Register is set when input to the "on-the-ground" interface indicates that condition.

The transactions required for this test can be interlaced during the procedures required for interface verification or during any other convenient interval. This can be arranged so that no time is lost in waiting for the timers to run out.

Required Timer Duration Test

Duration of each timer run (T_C and T_I) must be verified to be 18 ±1.0 seconds by observation of FS code change.

On-the-Ground Validation Test

For transponders that support automatic on-the-ground condition input and either implement Extended Squitter formatting or support the on-the-ground validation requirements of §2.2.18.2.7.c, the following test **shall** be performed.

The on-the-ground input is used in determining the codes for FS, VS and CA fields. The requirements of Section §2.2.18.2.7.c utilize radio altitude, ground speed and airspeed inputs to validate the on-the-ground status when indicated by the input to the transponder. If the conditions for overriding the on-the-ground status indicated by the input to the transponder, the airborne status **shall** be utilized to select FS, VS and CA field coding. Also, for extender squitter format selection, airborne formats **shall** be transmitted unless overridden by ground station interrogation commands. CA field validation for Acquisition squitters and Extended Squitters is verified as part of Procedure #6 in §2.5.4.6, so the following test can be incorporated as part of that testing.

Setup the transponder to indicate on-the-ground status by input to the transponder. With no input of radio altitude, airspeed and ground speed to the transponder, verify that the FS codes are determined by the transponder states above with the Ground Register set to on-the-ground and VS is set to 1. Input radio altitude, airspeed and ground speed to the transponder. Since not all aircraft installations may have access to all three inputs, testing is required for all combinations of inputs being provided to the transponder so that each input is tested individually and collectively. This is to insure that any one input reporting a value that sets airborne status as specified in §2.2.18.2.7.c, properly outputs FS values according to Figure 2-13 with the Ground Register reset to NOT indicate on-the-ground condition and VS is ZERO. If all inputs are supported by the transponder, a total of 27 combinations are required. This represents 9 cases with radio altitude not input, 9 cases with a value above 50 feet and

9 cases with a value below or equal to 50 feet. The same variation for airspeed and ground speed is required except the values selected would be above 100 knots to satisfy the requirement to reset the Ground Register to NOT indicate on-the-ground condition and a value at 100 knots or below to not modify the on-the-ground status.

SSS Code Validation Test

The SSS subfield is contained in the ME field of airborne Extended Squitters. Setup the transponder to transmit airborne Extended Squitters at the nominal rates. Verify the following:

1) SSS=0 when no alert (the Alert Register is clear and T_C timer is not running) and no SPI condition is active.

2) SSS=1 when Alert Register is set and no SPI Condition is active.

3) SSS=2 when the T_C timer is running and returns to ZERO after the temporary alert has cleared after 18 ±1 seconds.

4) SSS=3 when the T_I timer is set indicating a SPI Condition is active and returns to ZERO after the T_I timer expires.

5) SSS=1 when Alert Register is set and SPI Condition is active. Clear the alert Register during the T_I timer running and verify that SSS=3 until the T_I timer expires.

6) SSS=2 when the T_C timer is running and the T_I timer is running. Start the T_C timer followed by the T_I timer. Verify that SSS equals 3 upon expiration of the T_C timer and returns to ZERO upon T_I timer expiration.

7) SSS=3 when the T_I timer is started. Prior to expiration of the T_I timer, start the T_C timer and verify that SSS equals 2. Upon expiration of the T_C timer, verify that SSS returns to ZERO.

8) SSS=3 when the T_I timer is started. Set the Alert Register while the T_I timer is running and verify that SSS equals 1.

2.5.4.8 Procedure #8 PI (Parity/Identity) Verification

(§2.2.18.2.9)

This test procedure verifies the PI field generation.

A separate test sequence is not required.

Required Verification:

During the lockout tests, the transponder generates replies to All-Call interrogations and the reply receiver receives the PI field and extracts the II or SI code received by the transponder in the preceding interrogation.

Verify that the extracted code agrees with the II or SI of the preceding All-Call.

Verify that the extracted code equals 0 if the preceding All-Call was an ATCRBS/Mode S type.

2.5.4.9 Procedure #9 Address Tests

(§2.2.18.2.2 – addressing discrimination)
(§2.2.13.1.1.a (1) – protection of Mode S address bits)
(§2.2.13.1.1.a (2) – address reporting)
(§2.2.13.1.1.a (3) and §2.2.18.2.1.c – address encoding)
(§2.2.18.2.11 – address interface)

This test procedure verifies that the address set into the address interface of the transponder is only accepted during power-up or unit reset, that the accepted address set is actually the address to which the transponder responds, and that the accepted address is the only address which the transponder reports in DF=11. It is also verified that this accepted address pattern is used in generating the AP field of replies and that the transponder does reply only to this address.

Test Sequence:

1. Remove power from the transponder under test.
2. Set the transponder address selector device to any valid Mode S address (not all 0's or all 1's), referred to as "address #1."
3. Apply power to the transponder under test and wait a minimum of 2 seconds.
4. Interrogate the transponder with address #1 and observe:

   Acceptance for all formats.
   Correct reporting of address # 1 in AA field of DF=11.
   Correct encoding of address # 1 in AP field of replies.

5. Interrogate the transponder with any Mode S address other than address #1 and observe:

   Non-acceptance of all formats.

6. Set the transponder address selector device to a different valid Mode S address, referred to as "address #2."
7. Verify correct reporting of address # 1 in AA field of DF=11.
8. If the transponder is designed to monitor the Mode S address, then:
9. Verify that the transponder generates an appropriate diagnostic error message to indicate that the transponder address has changed.

10. Interrogate the transponder with address #2 and observe:

    Non-acceptance of all formats.

11. Interrogate the transponder with address #1 and observe:

    Acceptance of all formats.
    Correct reporting of address # 1 in AA field of DF=11.
    Correct encoding of address # 1 in AP field of replies.

2.5.4.10 Procedure #10 Altitude Report Tests

(§2.2.13.1.2.a (l) – in ATCRBS)
(§2.2.13.1.2.a (2) – in Mode S)
(§2.2.18.2.11 – interface)

This test procedure verifies that the altitude code, as it is set into the interface, appears correctly in both ATCRBS and Mode S replies.

Transponder Designs

In ATCRBS replies only 11 of the possible 13 pulses are used; X and D1 are not part of the code. Additionally, some transponders may not need the capability to transmit the D2 and/or D4 pulses, which start at 62,000 and 30,750 feet respectively. At the other extreme, a transponder with the capability to report altitude in meters must have the capability to transmit ONEs in all 13 bits of the AC field.

Transponders report altitude in up to six reply formats depending on the implementation level: ATCRBS Mode C, DF=0, DF=4, (Level 1 and above) the airborne position squitter, DF=17 (Extended Squitter capability), and in DF=16, and DF=20 (Level 2 and above).

Test Sequence:

Step 1: No Barometric Altitude Data

Disconnect the interface input for altitude code or do not supply altitude information if the interface is common with other data systems. Interrogate so that all possible altitude reporting downlink formats are generated in replies. For ATCRBS, verify that only the bracket pulses appear and that bits 20 through 32 of Mode S replies are ZEROs. Setup the transponder to transmit airborne position squitters and verify that the altitude field is all ZEROs.

Connect the altitude source to the interface input, generate a code consisting of all ZEROs and verify as above. Repeat the test procedure while providing invalid data and verify that the AC field is set to all ZEROs.

Step 2: Barometric Altitude Data Available

With the altitude code source connected to the interface input, apply the Barometric Altitude Input_A values provided in Table 2.5.4.10. Verify that the altitude appears correctly in all reply formats containing an altitude code, and in the Mode S replies and Extended Squitter the "Q" bit and the "M" bit are set to ZERO (0).

Apply the Barometric Altitude Input_B values provided in Table 2.5.4.10. Verify that the altitude appears correctly in all reply formats containing an altitude code, and in the Mode S replies and Extended Squitter the "Q" bit is set to ONE (1) and the "M" bit is set to ZERO (0) for cases 1 through 7. Verify that the "Q" bit and the "M" bit are set to ZERO (0) for cases 8 through 10.

Table 2.5.4.10: Barometric Altitude Data Inputs

Case #	Altitude Input_A (100 foot increments)	Altitude Input_B (< 25 foot increments)
1	– 1,000	– 1,012
2	– 900	– 500
3	– 200	– 12.5
4	0	0
5	800	28,025
6	2,800	32,050
7	6,800	50,175
8	14,800	50,200
9	30,800	51,600
10	62,800	79,800

For aircraft installations that support shared interfaces and aircraft bus interfaces that provide multiple altitude data sources and types, perform the above test patterns and verify that the correct altitude source is selected. Apply all sources of altitude data that are available to the transponder and verify the following: 1) the proper pressure altitude input is selected the data is referenced to the standard pressure setting of 1013.25 hectopascals (uncorrected pressure altitude), 2) that if 25-foot or better pressure altitude sources are available, pressure altitude is reported in 25-foot increments. Verify that if 25 foot or better pressure altitude sources are not connected or are not available, that 25-foot altitude is not reported.

Step 3: Data Provided in Metric, If Available

Repeat Step 2 with the input indicating metric input, if available, and verify that the "M" bit is set to 1 in the AC field of all replies.

2.5.4.11 Procedure #11 4096 Code Tests

(§2.2.13.1.2.b)
(§2.2.18.2.11 – interface, electrical)
(§2.1.7.a – interface, manual)

This test verifies that the 4096 code set by the pilot appears correctly in both ATCRBS and Mode S replies.

Procedure Selection:

For all installations and transponder designs, the initial input of the code is set manually by the pilot. The code selector device may or may not be an integral part of the transponder. If an electrical input exists, it may be dedicated to this function alone, or it may be common with other data systems. Any procedure selected ultimately must be traceable to the manual input mode, even if the pilot's selector device is provided by another manufacturer.

Pattern Selection:

The correlation between pulse position in ATCRBS and bit number in Mode S replies is shown in §2.2.13.1.2.b.

Only 12 of the possible 13 pulses or bit positions are used; X(26) is not part of the code. Test patterns are chosen so that the most likely failure modes (incorrect wiring in connectors, cables, code switches or register malfunction) are likely to be found. The following systematic test pattern generation is required:

There exist 66 code patterns consisting of two ONEs and 10 ZEROs, while another 66 patterns have two ZEROs and 10 ONEs. These 132 patterns are used for verification because they assure that a pair of connections is not defective. (A sequence of randomly chosen patterns is not suitable because there are many incorrect wiring possibilities and a random test can fail to detect errors).

The correlation between the required test pattern and the actual code numbers as seen by the pilot follows:

4096 Codes That Produce Two ONEs and 10 ZEROs

0003	0202	1400
0005	0204	2001
0006	0210	2002
0011	0220	2004
0012	0240	2010
0014	0300	2020
0021	0401	2040
0022	0402	2100
0024	0404	2200
0030	0410	2400
0041	0420	3000
0042	0440	4001
0044	0500	4002
0050	0600	4004
0060	1001	4010
0101	1002	4020
0102	1004	4040
0104	1010	4100
0110	1020	4200
0120	1040	4400
0140	1100	5000
0201	1200	6000

4096 Codes That Produce Two ZEROs and 10 ONEs

1777	6577	7576
2777	6677	7637
3377	6737	7657
3577	6757	7667
3677	6767	7673
3737	6773	7675
3757	6775	7676
3767	6776	7717
3773	7177	7727
3775	7277	7733
3776	7337	7735
4777	7357	7736
5377	7367	7747
5577	7373	7753
5677	7375	7755
5737	7376	7756
5757	7477	7763
5767	7537	7765
5773	7557	7766
5775	7567	7771
5776	7573	7772
6377	7575	7774

Transponder Designs:

The Level 1 transponder reports the 4096 code in ATCRBS Mode A replies and in DF=5; 264 replies must be verified.

All other transponders report the 4096 code in ATCRBS Mode A replies and in DF=5, 21; 396 replies must be verified.

Test Sequence:

Enter all test patterns manually or electrically and verify that they are correct in both ATCRBS and Mode S replies.

If the test patterns are entered electrically, a corresponding test procedure must be devised to verify the connection between 4096 codes and the electrical input to the transponder. This should include cables and connectors.

If the electrical input simulates an on-board data distribution system, the verification procedures for that system govern the above verification.

A manual insertion of the 4096 codes can be prompted by an interactive readout from the controller to speed the procedure.

2.5.4.12 Procedure #12 RI, Acquisition and Maximum Airspeed

(§2.2.13.1.1.b – insertion)
(§2.2.14.4.33 – code)
(§2.2.18.2.11 – interface)
(§2.2.22.1.5)

This test procedure verifies that the airspeed code as it is set at the fixed direct data interface appears correctly in replies and that it appears only when the interrogation shows AQ=1.

Pattern Selection:

Of the 4 bits of the RI field, one (bit 14) is controlled by the content of the received interrogation. The remaining three (bits 15 – 17) show the airspeed code from the fixed direct data interface when bit 14 is ONE, and input from a variable data interface when bit 14 is ZERO. This procedure concerns only the fixed data interface; RI action for the variable data interface is verified in Procedure #17.

To be verified are code 0 and codes 8 through 14 of §2.2.14.4.33.

Transponder Designs:

The airspeed codes range to 1200 knots. Bit 15, if ONE, characterizes all airspeeds above 300 knots. Transponders may not have inputs for airspeeds above that limit.

The Level 1 transponder requires interrogations with UF=0, AQ=0, 1 and RL=0 (2 interrogation patterns).

All other transponders require interrogations with UF=0, 16, AQ=0, l and RL=0, l (8 interrogation patterns).

Test Sequence:

For each airspeed code (for which the transponder is equipped), interrogate with the required number of patterns and verify that the RI field shows the code according to §2.2.14.4.33 or §2.2.22.1.5, as appropriate.

Note: *Since some transponders may enter the airspeed code through a common on-board data system, a corresponding test procedure must be used.*

2.5.4.13 Procedure #13 PR, Probability of Reply, Stochastic Acquisition

(§2.2.14.4.31 – PR code)
(§2.2.18.2.2.i – protocol)

This test procedure verifies that the probability-of-reply decision for All-Call interrogations is carried out correctly.

Principle of Test Procedure:

A large number of Mode S All-Call interrogations (UF=11) are made for each of the PR codes. For each PR code, a specified fraction of the interrogations will result in a reply. One hundred interrogations would provide a valid sample for active PR codes while a lesser number would be adequate for other codes.

Transponder Designs:

This test applies to all transponder designs.

Test Sequences:

a. Transponder Not Locked Out to All-Calls

Interrogate with UF=11 according to the summary below and verify the number of replies received as indicated:

Number of Interrogations	PR =	Replies	
		No Less Than	No More Than
100	0	99	100
100	1	35	65
100	2	18	32
100	3	9	15
100	4	4	8
20	5		0
20	6		0
20	7		0
100	8	99	100
100	9	35	65
100	10	18	32
100	11	9	15
100	12	4	8
20	13		0
20	14		0
20	15		0

b. Transponder Locked Out to All-Calls

The transponder can be in 79 different specific lockout states as determined by the running of the one T and the 78 T timers. The following test sequence must be repeated for each of the lockout states:

Interrogate so that the transponder is locked out non-selectively or selectively as required.

Interrogate with UF=11, containing II corresponding to the existing lockout state, and verify the number of replies according to the summary below:

Number of Interrogations	PR =	Replies	
		No Less Than	No More Than
20	0		0
20	1		0
20	2		0
23	3		0
20	4		0
20	5		0
20	6		0
20	7		0
100	8	99	100
100	9	35	65
100	10	18	32
100	11	9	15
100	12	4	8
20	13		0
20	14		0
20	15		0

Squitter Precaution

Because squitters, which have the same format, can distort the results of this test, precautions must be taken. Therefore, the test should be conducted during the 800-millisecond periods following squitter (§2.5.4.6).

Note: *It is not necessary that this test consist of an uninterrupted sequence of All-Calls. The interrogations can be dispersed throughout the overall test procedure whenever convenient.*

2.5.4.14 Procedure #14 Not Used

2.5.4.15 Procedure #15 Comm-A, Interface and Information Content

(§2.2.19.1.10 – protocol)
(§2.2.13.3.1.a – content)
(§2.2.13.3.1.b – no-storage design)
(§2.2.13.3.1.c – storage design)
(§2.2.13.3.1.d – non-acceptance)
(§2.2.3.4.2 – acceptance rate)
(§2.2.19.1.1.b – broadcast)

This procedure verifies that the information contained in Comm-A interrogations passes out of the transponder within the specified time interval and that such information correctly replicates the received transmission.

In this test, the equipment must monitor both the reply content via the reply received, and the uplink interface output via the interface adapter.

Interrogation Patterns:

UF	=	20, 21.
RR	=	0.
MA	=	3080 different patterns, half containing two ONEs, half containing two ZEROs.

Address: Use the broadcast address for 5% of the interrogations.

Total number of interrogations if UF=20 and UF=21 are alternated: 3080.

Test Sequence A:

Interrogate at the normal (50/sec) rate, alternating UF=20 with UF=21 inserting RR=0 to 15, PC=0 to 7, DI=0 to 7 and SD=random. Insert the 3080 different patterns into MA. Verify that the uplink content, as transmitted, appears at the interface in the same order as transmitted.

Note: *If the interface is of the storage design, the information may be delayed; coordination with the interface design is required.*

Test Subsequence:

Within the test sequence above, make 100 interrogations in 2.0 seconds. Schedule bursts and timing are as follows:

Start of Burst (ms)	Number of Interrogations	Interrogation Rate (per sec)
0	4	2500
80	4	2500
160	8	320
320	8	320
480	8	320
640	18	180
1000	4	2500
1080	4	2500
1160	8	320
1320	8	320
1480	8	320
1640	18	180

For the non-storage design, verify compliance with §2.2.13.3.1.b.

For the storage design, verify that within two seconds of this subsequence all uplink content appears in proper order as transmitted at the interface terminals.

Test Sequence B (Buffer Full)

Within one second, generate interrogation bursts as shown below. Use short replies to remain within the reply capability of the transponder.

Start of Burst (ms)	Number of Interrogations	Interrogation Rate (per sec)
0	4	2500
80	4	2500
160	8	320
320	8	320
480	8	320
640	18	180
750	16	180

Note: *This sequence is chosen so that the minimum data transfer rate of a storage type interface is exceeded.*

One second after the first burst, verify that the content of at least the first 50 interrogations has appeared at the interface and that the transponder has not generated a reply to those interrogations whose content has not appeared at the interface.

This test applies only if a storage design has been used.

2.5.4.16 Procedure #16 Broadcast Formats

(§2.2.19.1.1.b)

The broadcast function is verified as part of Procedure #15. A negative test must be conducted to verify that the broadcast function does not occur when short formats are used.

Patterns and Sequence:

Interrogate with UF=0, 4, 5 and a broadcast address. Verify that no information transfer occurs at uplink interfaces as a result of these interrogations.

2.5.4.17 Procedure #17 Downlink Interface, DFs 0, 16

(§2.2.13.3.1, a and b – interface)
(§2.2.19.1.16 – protocol)
(§2.2.14.4.26 – MV)
(§2.2.22.1.4)

This test procedure verifies that bit insertion into the first 32-bit positions of Mode S replies is possible and is carried out without disturbing established fields or protocols.

This test procedure also verifies that bit patterns inserted into the MV field of DF=16 are transmitted as inserted.

Transponder Design:

The downlink interface for DFs 0 and 16 can exist as a separate port or as one direction of a bidirectional un-buffered (real time) port. It can also exist as an interface accepting only the bit insertion for DF=0 (short reply).

All data link transponders use DF=0 and DF=16.

Note: *In TCAS installations, it is possible that a separate interface, according to §2.2.19.1.16, exists for UF=DF=0, 16. Such an interface may not be accessible if TCAS and transponder functions are integrated. In such circumstances, the test procedures for TCAS* ***shall*** *govern.*

Patterns for DF=0, 16

Unconditional Insertion

The locations are:

Bits 9, 10, ll: a total of 3 bits.

Interface patterns:

There are 8 possible unconditional interface patterns to be verified based on these 3 bits.

Interrogation patterns:

UF=0, RL=0, AQ=1, DS=0.
UF=16, RL=1, AQ=1.
UF=0, RL=1, AQ=1, DS any value other than 0.

Conditional Insertion

The locations are:

Bits 15, 16, 17: These can be inserted only if the interrogation contained AQ=0.

Interface patterns:

There are 8 possible conditional interface patterns to be verified based on these 3 bits.

Interrogation patterns:

UF=0, RL=0, AQ=0, DS=0.
UF=16, RL=1, AQ=0.
UF=0, RL=1, AQ=0, DS any value other than 0.

Note: *The interrogation that includes a DS value other than ZERO will test that the reply bits are not affected by TCAS Crosslink protocol. The data content inserted in the ground-initiated Comm-B registers being tested should be other than ALL ZEROs or ALL ONEs.*

Positive Test Sequences for DF=0, 16

Unconditional Insertion

For each interrogation pattern, generate 8 interrogations while sequencing through all 8 possible interface patterns. Verify that the replies contain bits as inserted.

Conditional Insertion

For each interrogation pattern, generate 8 interrogations while sequencing through all 8 possible interface patterns. Verify that the replies contain bits as inserted.

Negative Test Sequence for DF=0, 16

Disconnect the interface input for the airspeed report or enter code 0 for airspeed. Insert ONEs for bits 14 through 17 at the downlink interface and interrogate with UF=0, RL=0, AQ=1 and with UF=16, RL=1, AQ=1.

Verify that bits 15 through 17 of the replies are ZEROs.

MV Test Sequence for All Data Link Transponders

This test sequence includes all unconditionally inserted bits in addition to the bit patterns of the MV field.

Interface Patterns and Test Sequence

Using bits 9 through 11 and 41 through 58, generate 420 interface patterns, 210 containing two ONEs and 210 containing two ZEROs.

Interrogate to extract replies of the inserted patterns and verify that they are transmitted as inserted. In the case of the interrogation with DS other than ZERO, verify that the MV field contains the data of the ground-initiated Comm-B register corresponding to the DS value in the interrogation.

Note: *The MV field will only contain the requested Comm B data if the transponder is TCAS Crosslink Capable and the requested register is supported by the transponder.*

2.5.4.18 Procedure #18 Comm-B Protocol

(§2.2.19.1.12 through §2.2.19.1.12.4)
(§2.2.19.2.2 through §2.2.19.2.3.1)
(§2.2.19.2.3.3 through §2.2.19.2.3.5)
(§2.2.19.2.1.2 – UM)
(Figure 2-19 – Flowchart)

This test procedure verifies that the Comm-B protocol is carried out correctly.

The test procedure follows the notation of transponder states and of interrogation patterns as shown in the flowchart.

Transponder States

The transponder states are defined by the combinations of conditions E through I, where:

E = B-register set: B-bit inserted.
F= T-register set: Message has been transmitted.
G = Timer runs: For multisite only.
H = IIS is correct (in next interrogation).
I = Next message waiting.

There are seven possible states as shown below:

#	E	F	G	H	I	
1	0	0	0	0	0	No B-bit, others impossible or inconsequential.
2	1	1	0	0	0	Message extraction, not multisite protocol.
3	1	1	0	0	1	As above, next message waiting.
4	1	1	1	0	0	In multisite, interrogation with wrong IIS can not close out.
5	1	1	1	0	1	As above with next message waiting.
6	1	1	1	1	0	In multisite, interrogation with correct IIS can close out.
7	1	1	1	1	1	As above, but after closeout B-bit will show again.

States 4 through 7 must be used with all 15 IIS codes.

Total: 4 x 15 + 3 = 63 transponder states to be used.

Interrogation Patterns

#	A	B	C	D	K	L	
1	0	0	0	0	0	0	Ordinary interrogation, asking for short reply.
2	0	0	0	0	0	1	Ground-initiated Comm-B extraction (FIS etc).
3	0	0	0	0	1	0	Air-initiated Comm-B extraction, not multisite.
4	0	1	0	0	0	0	Multisite, but not for Comm-B.
5	0	1	0	0	0	1	Ground-initiated Comm-B extraction, multisite not for Comm-B.
6	0	1	0	0	1	0	Air-initiated Comm-B extraction, multisite not for Comm-B.
7	0	1	0	1	0	0	Multisite closeout for Comm-B.
8	0	1	0	1	0	1	Multisite closeout for Comm-B and ground initiated Comm-B extraction.
9	0	1	0	1	1	0	Multisite closeout for Comm-B and attempt to extract a possible message still waiting at the air-initiation interface.
10	0	1	1	0	0	0	Multisite reservation with wrong RR, see next line.
11	0	1	1	0	0	1	Attempt at multisite reservation with wrong RR. Transponder must not accept reservation.
12	0	1	1	0	1	0	Multisite reservation, correct.
13	1	0	0	0	0	0	Non-selective cancellation.
14	1	0	0	0	0	1	Non-selective cancellation and ground initiated Comm-B extraction.
15	1	0	0	0	1	0	Non-selective cancellation and attempt to extract possible message still waiting at the air-initiation interface.
16	1	1	0	0	0	0	Non-selective cancellation, multisite not for Comm-B.

#	A	B	C	D	K	L	
17	1	1	0	0	0	1	Non-selective cancellation with ground initiated Comm-B extraction, multisite not for Comm-B.
18	1	1	0	0	1	0	Non-selective cancellation and attempt to extract possible message still waiting at air-initiation interface, multisite not for Comm-B.
19	1	1	0	1	0	0	Non-selective cancellation and multisite closeout, cancel non-selective message and close out multisite message if IIS is correct.
20	1	1	0	1	0	1	Non-selective cancellation and multisite close-out and ground-initiated Comm-B extraction. Will cancel non-selective message and will close out multisite message if IIS is correct. Will extract Comm-B.
21	1	1	0	1	1	0	Same as above, except with air-initiated extraction.
22	1	1	1	0	0	0	Non-selective cancellation and reservation with wrong RR. Cancel but make no reservation.
23	1	1	1	0	0	1	Non-selective cancellation and reservation with wrong RR. Cancel but make no reservation.
24	1	1	1	0	1	0	Non-selective cancellation and reservation. Cancel and make reservation.

A =	PC=4:	Cancellation
B =	DI=1:	Multisite in effect
C =	MBS=1:	Multisite reservation
D =	MBS=2	Multisite closeout
K =	RR=16 with DI ≠ 7 or with DI=7 and RRS=0	Air initiated MB extraction
L =	RR larger than 15 but not according to code K above	Ground MB extraction

The symbols A, B, C, etc., correspond to the symbols on the flowchart (Figure 2-19).

Interrogation patterns 4 through 12 and 16 through 24 of the 24 patterns shown are IIS-sensitive; each of them must be used with each of the 16 IIS codes.

Interrogation patterns 10, 11, 22, 23 are forbidden to the sensor. They must be used to verify that the transponder makes reservations only when the reservation is accompanied by extraction of the message.

There are 18 x 16 + 6 = 294 interrogation patterns to be used.

Test Sequence.

All 18,522 combinations of the 63 transponder states and 294 valid interrogation patterns must be used. Interrogate so that the transponder enters a given state and then use all interrogation patterns that will not change the state, followed by patterns that will. Repeat with the now acquired state. This must be done until all 18,522 combinations have been exhausted. Some combinations must be repeated because more than one interrogation pattern can change the state.

To 'set the B-bit', use DR=1 and DR=3 commands alternately during the test sequence.

Required Negative Tests

Concurrent tests are part of the sequence above.

If PC is not required to be 4, use all other codes. If DI is not required to be 1, use all other codes. If MBS is not required to be 1 or 2, use codes 3 and 4. If RR is required to be less than 16, use all codes less than 16.

Inserted tests must be interspersed within the sequence.

Insert interrogations of formats other than UF=4, 5, 20, 21 and verify that they have no effect on the protocol.

Such interrogations should constitute one percent of the total number of interrogations used.

The interrogation patterns 2, 5, 8, 11, 14, 17, 20 and 23 must include, when RR=16 is used, the combinations of RR=16 with DI=7 and RRS Codes 1 through 15. It must be verified that these combinations do not cause the air-initiated Comm-B message to be transmitted.

UM Field Verification

During the test sequence when a multisite reservation is made (column C), the following reply will contain IIS and IDS in the UM field according to §2.2.19.2.1.2. Verify that these patterns are correct.

Timer Duration and Automatic Closeout Test

Arrange the sequence so that the timer runs out occasionally. Verify timer duration and closeout.

Simultaneous Tests

While the transponder is undergoing the verification of the B-protocol, the number of interrogations and replies can be used to make tests for interface action, message content, etc. Such tests are described in Procedures 19 through 23.

2.5.4.18A Procedure #18A Enhanced Comm-B Protocol

If the transponder adheres to the enhanced air-initiated Comm-B protocol as described in §2.2.21.1.2, the following test procedures **shall** verify that the enhanced protocol is carried out correctly by the transponder.

The following tests verify that:

The transponder will properly carry out the Comm-B protocol and will operate with non-selective interrogators, interrogators in multisite configuration and interrogators that will take advantage of the enhanced protocol and extract B messages without making Comm-B reservations. The modified Comm-B protocol test will verify that the transponder can properly carry out the enhanced Comm-B protocol, handling 16 independent B timers, one for each II and up to 16 concurrent Comm-B messages waiting indications to ground interrogators.

Procedure:

The transponder **shall** be tested according to the guidelines stipulated in procedure 18 with the following additions and/or modifications:

Transponder conditions E and F are defined for non-selective and IIS values 1 - 15. The transponder condition G is defined for IIS values 1 - 15. Condition H is no longer a necessary condition since the transponder can have 15 concurrent reservations.

Procedure 18 is expanded to include additional combinations of conditions E, F and G. For current transponder state 1, produce 15 additional states with a Comm-B message not waiting for II=1 - 15. As the II varies, vary the number of other Comm-B messages waiting for the remaining II values from 0 - 15. States 2 and 3 must be similarly expanded except these states stipulate a Comm-B message waiting as II varies from 0 - 15. The number of Comm-B messages waiting concurrently with the Comm-B message for the II under test is to vary from 0 - 15. It should be noted that state changes from interrogations will be more extensive with the enhanced protocol and that proper setup is required to produce the required transponder states. It is necessary to produce a Comm- B message waiting for the proper IIS by input of directed Comm-Bs to the transponder or a Comm-B message for II of 0 followed by the extraction by the necessary IIS. Verification of proper transponder state requires multiple interrogations to extract the transponder state for each IIS. An air initiated Comm-B message which is extracted by a non zero IIS potentially changes all 16 Comm-B message states. Those interrogation patterns used to close out a Comm-B message for a given IIS must insure that the proper message for the given IIS is closed out. The reply data for Comm-B messages **shall** be verified. Each of the interrogation patterns 1 through 24 inclusive are now IIS sensitive and must be run for each IIS value.

Additionally, verify for each IIS that upon B timer expiration, the message for that IIS is indicated as available to all other available II codes. Repeat the procedures defined above for 2, 3 and 4 segment Comm-Bs and insure that the proper data is indicated in the replies.

UM Field Verification

In all cases, verify that the transponder reports the proper state in the UM field and the report is for the IIS contained in the interrogation pattern.

2.5.4.19 Procedure #19 AIS Flight Identification, Protocol and Interface

This test procedure has been replaced by the test procedure in §**Error! Reference source not found.**.

2.5.4.20 Procedure #20 Extended Capability Report

(§2.2.14.4.20 – BDS)
(§2.2.14.4.35 – RR)
(§2.2.19.1.12.2 – extended data source)
(§2.2.19.1.12.5 through §2.2.19.1.12.7 – protocol)
(§2.2.19.1.12.8 – updating)
(§2.2.19.1.17 – interface)
(§2.2.22.1.2.2)

This test procedure verifies that the transponder, given the correct interrogation, reports its capability in the MB field of a Comm-B reply. Also verified is the correct functioning of the interface used (if any) and the updating function if it is part of the transponder.

Interface

The source that generates the content of the extended capability report may be internal or external to the transponder. If internal, only the correctness of the report can be verified, if external and not connected to the transponder, the interface action must be verified.

Interface Patterns

The extended capability report occupies the last 48 bits of MB and carries BDS1=1 and BDS2=0, 1; BDS2 codes larger than 1 may also be used.

A total of 2256 interface verification patterns (Procedure #19) must be used if an external report source is used.

Interrogation Patterns

If during the B-protocol test procedure (Procedure #18) an interrogation pattern is used that requires RR to be larger than 16 (Column L), use RR=17 as often as required to carry out the extended capability report verification.

Test Sequence for Internal Report Source

Use RR=17 and, if required, RR=17, DI=7 and RRS=required BDS2 to extract the report.

Verify that the content of the report is correct.

If possible, change the capability and observe that the transponder gives a broadcast Comm-B request. Verify the content of the new report.

2.5.4.21 Procedure #21 Directed Comm-B

(§2.2.19.2.3.2 – protocol)
(§2.2.13.3.2 – interface [see note])

This test procedure verifies that multisite directed Comm-B transmissions are carried out correctly by the transponder.

Transponder Design

The command to the transponder, that an air-initiated Comm-B **shall** be directed to a known sensor, originates in a peripheral device. The transponder must recognize such a command and may be designed to accept it in one of two ways.

One possible design operates as follows: Regardless of the transponder state, the interface inserts a downlink pattern containing DR=1 (the B-bit), IIS (the UM code of the desired destination), and IDS (the UM Comm-B reservation code). Usually, the transponder would pass through the IIS and IDS codes without further examination. For this function, however, both are sensed so that, as soon as the T_{RB} timer is found not to be running, this pattern can be used for a routine surveillance or communication reply. The protocol sequence as tested in Procedure #18 then takes over and completes the transaction cycle.

Another design would provide for a separate dedicated interface which may accept only the desired destination or may be designed to take all of the directed communication.

The interface adapter used in the test setup must conform to the design of the transponder to be tested.

Interface Patterns of Test Sequence

During the B-protocol test procedure (Procedure #18), use the interface pattern as described above or enter into the special interface the patterns necessary to cause a directed Comm-B initiation.

Use IIS codes from 1 to 15 (a total of 15 codes) and reply formats DF=4, 5, 20, 21.

Verify that the pattern transmitted by the transponder corresponds to the pattern inserted. Give special attention to the BDS codes that may have been inserted, depending on transponder design.

Verify that this directed Comm-B has not interrupted another existing reservation condition. If the transponder has implemented the enhanced multisite Comm-B protocol, verify that if an air-initiated message has been extracted by a given non zero IIS and the transponder is currently reserved for the IIS extracting it, that a directed Comm-B message to this IIS is queued and made available subsequent to the closeout of the B message to this IIS.

Verification that this Comm-B has been extracted by the assigned interrogator is intrinsic in Procedure #18 and need not be repeated.

2.5.4.21A Procedure #21A Comm-B Broadcast (§2.2.19.1.12.4.1 protocol)

Test Procedure:

Notes:

1. *The command to the transponder that a Comm-B broadcast message **shall** be sent originates in a peripheral device or in the device that holds the extended capability report.*

2. *The Comm-B broadcast does not affect the existing Comm-B protocol, air or ground initiated. The existing test procedures remain unchanged.*

3. *Verification of interface patterns is already part of the Comm-B test procedures and need not be repeated for the Comm-B Broadcast.*

This test procedure verifies that the Comm-B broadcast protocol is carried out correctly.

During the B-protocol test procedure (Procedure #18) insert the appropriate DR code command and text of the Comm-B broadcast into the transponder.

Verify that:

1. The transponder does show the DR codes 4, 5, 6, or 7 only when no air-initiated Comm-B transaction is in progress.

2. The Comm-B broadcast message can be extracted by the interrogator for 18 ±1 seconds.

3. The Comm-B broadcast annunciation (DR=4, 5, 6, or 7) and the Comm-B broadcast text are interrupted by an air-initiated Comm-B initiation and reappear when that transaction is concluded. For transponders implementing the enhanced air initiated Comm-B protocol, the transponder will be independently interrupted by up to 16 Comm-B messages that are assigned to each II code. After the Comm-B is concluded for each II, the Comm-B broadcast is again available to that interrogator. Verify that the next waiting broadcast message is not announced to any interrogators until the current broadcast message has timed out for all interrogators.

4. After interruption another 18 ±1 seconds of broadcast time is available to the interrogator. For transponders implementing the enhanced air-initiated Comm-B protocol, the transponder will be independently interrupted by up to 16 Comm-B messages that are assigned to each II code. After interruption, another 18 ±1 seconds of broadcast time is available for each II.

5. A subsequent and different Comm-B broadcast message is announced with the alternate DR code and that this DR code also follows verifications 1 through 4 above. For transponders implementing the enhanced air-initiated Comm-B protocol, the transponder will be independently interrupted by up to 16 Comm-B messages that are assigned to each II code. The subsequent Comm-B broadcast is announced only after each Comm-B is broadcast timer has expired for all II codes.

2.5.4.22 Procedure #22 Downlink Interface, Storage Design, Buffer Rate

(§2.2.13.3.2.c – buffer rate)
(§2.2.13.3.2.d – buffer function)
(§2.2.13.3.2.e – unavailable data)
(§2.2.3.4.2 – data rate)

This test procedure verifies that, when a storage design is used for the downlink interface, the buffer functions correctly and that the buffer capacity is sufficient. Transponder action when data are not available is also verified.

Interface Patterns

The buffer must contain at least 16 MB patterns. The 16 MB patterns can have 16 different BDSl and 16 different BDS2 codes, a total of 256. Several messages (MB patterns) with identical codes can exist for insertion as air-initiated Comm-B.

Air-Initiated Comm-B

The buffer must have space to indicate which of the stored MB patterns are intended for air-initiated Comm-B. It must have means to sequence their insertion in the order received.

Message Output

If the interface circuit used for the AIS and the extended capability reports is also used in this test, message content verification has already been done. It is recommended that differing patterns be used for different BDS codes.

If the interface circuit is not the one already verified, the 2256 test patterns described in Procedure #19 must be used.

Buffer Input Rate

The buffer input rate must be at least 16 MB patterns per second; there is no upper limit, because aircraft data can be updated so that a newly arrived pattern replaces an already stored pattern of the same BDS code.

Test Sequence, Buffer Design

Enter 16 messages into the downlink interface in the following sequence:

a. Five messages with different BDS codes and intended for air-initiated Comm-B.

b. Eight messages with different BDSl codes intended for ground initiation.

c. Two messages with BDS codes identical to the codes intended for air-initiation but with message content differing.

d. One message identical in BDS code but differing in content from the group in b above.

The object of this test sequence is to verify that:

The five air-initiated messages are delivered in the sequence received, and the B-Protocol (Column L of the interrogation patterns listed in Procedure #18) is carried out correctly. The differing BDS codes serve to identify the sequence of the messages.

The 8 ground-initiated messages are extracted by RR corresponding to their BDS1 code in a sequence chosen by the interrogator and that these messages can be extracted several times each.

The buffer has separately stored messages not intended for air-initiation, i.e., the buffer must not replace existing BDS codes if they are intended for air-initiation.

The message in “d” above has replaced (updated) one of the eight ground-initiated messages and that only this message, rather than the previous entry, is transmitted when the interrogator calls for it.

An MB field consisting of ALL ZEROs is transmitted if the interrogation asks for a BDS code not presently in the buffer.

This test sequence fits into the sequence of Procedure #18.

Test Sequence, Buffer Rate and Function

Enter 16 messages with differing BDS (BDS1 and BDS2) codes into the buffer.

In the next three seconds:

a. Interrogate at a rate of 1250/sec (once every 800 microseconds), extracting the messages from the buffer by use of the required RR, DI and RRS codes. Stop interrogating after all messages have been received once.

b. Start entering replacement messages with differing content but identical BDS codes at the rate of at least 16/sec.

c. One second after the start of this sequence (a), start extracting the messages again. Schedule extraction in bursts, each burst consisting of two interrogations following each other 800 microseconds apart. Schedule eight bursts, one after each 125 milliseconds.

d. Two seconds after the start, continue extracting messages at the rate of five/sec.

Verifications:

Test “a” above verifies that the transponder and the buffer can sustain the minimum reply rate as specified.

Tests “b” and “c” are used to verify that messages of like BDS codes are replaced and that in this process no scrambling of messages occurs.

Test “d” verifies that, as messages are updated, they are replaced within the buffer structure regardless of whether they have been transmitted.

This test sequence fits into the sequence of Procedure #18.

2.5.4.23 Procedure #23 Downlink Interface, No-Storage Design

(§2.2.13.1.2.a – insertion)
(§2.2.13.3.2.b – no-storage design)
(§2.2.13.3.2.e – unavailable data)

This test procedure verifies that the no-storage design or "real time" downlink interface performs as specified.

Interface Patterns

This downlink interface operates in real time in conjunction with an uplink interface that also is a no-storage design. Message extraction commands for Comm-B appearing at the uplink interface are recognized by the message source which then enters the downlink content into the downlink interface in time to be transmitted in reply to the interrogation.

For air-initiated Comm-B transactions, the interface can insert the B-bit Code (DR=1) into short and long replies.

For directed Comm-B transmissions (Procedure #21), insertion of IIS and IDS into the UM field is required.

Because the data rate of a real-time interface equals the data rate of the transponder by definition, rate verifications are not necessary.

Test Sequence

If during the B-protocol test procedure (Procedure #18) messages have to be sent or message content has to be verified, supply this interface with the patterns required.

Verify interface design correctness by use of the 2256 test patterns described in Procedure #19.

Verify that B-bit insertion is accepted by the transponder in all applicable formats and that IIS and IDS insertion is accepted by the transponder only if the UM field is not in use for another purpose.

2.5.4.24 Procedure #24 Comm-C Protocol

(§2.2.20.1.1 through §2.2.20.1.1.1.8 – protocol)
(§2.2.20.1.3 through §2.2.20.1.3.5 – multisite)
(§2.2.19.2.1.1 through §2.2.19.2.2.2 – multisite)
(Figure 2-20 and Figure 2-21 – Flowchart)

This test procedure verifies that the Comm-C protocol is carried out correctly.

The test procedure follows the notation of transponder states and of interrogation patterns as shown in the flowcharts.

Transponder States

#	H	I	J	K	
1	0	0	0	0	No ELM action in progress.
2	0	0	1	0	Waiting for segments, not multisite.
3	0	0	1	1	Ready for cancellation by PC=5.
4	1	0	0	0	Multisite reservation made, waiting for RC=0.
5	1	0	1	0	Multisite, waiting for segments.
6	1	0	1	1	Cannot be canceled or closed out.
7	1	1	0	0	Can be canceled or closed out.
8	1	1	1	0	Can be canceled or closed out.
9	1	1	1	1	Ready for cancellation or closeout.

H = T timer running.
I = IIS = stored value.
J = setup active.
K = all segments received.

States 7, 8, 9 are II-sensitive and must be used 16 times. States 3, 6, 9 are sensitive to the number of segments in the ELM, and must be used 15 times.

There are 354 transponder states to be used.

Interrogation Patterns

#	B	D	A	C	E	F	M	N	O	
1	0	1	0	0	0	0	0	0	0	Ordinary surveillance/ Comm-A.
2	0	1	0	0	0	1	0	0	0	Invalid Closeout: DI is wrong.
3	0	1	0	0	1	0	0	0	0	Invalid Reservation: DI is wrong.
4	0	1	0	1	0	0	0	0	0	DI, but not for Comm-C.
5	0	1	0	1	0	1	0	0	0	Closeout.
6	0	1	0	1	1	0	0	0	0	Reservation.
7	0	1	1	0	0	0	0	0	0	Cancel if not multisite.
8	0	1	1	0	0	1	0	0	0	Cancel if not multisite.
9	0	1	1	0	1	0	0	0	0	Cancel if not multisite.
10	0	1	1	1	0	0	0	0	0	Cancel if not multisite, DI not for Comm-C.
11	0	1	1	1	0	1	0	0	0	Cancel if not multisite and closeout.
12	0	1	1	1	1	0	0	0	0	Cancel if not multisite and reservation.
13	1	0	0	0	0	0	0	0	0	UF=24, not for Comm-C.
14	1	0	0	0	0	0	0	0	1	Segment with TAS request.
15	1	0	0	0	0	0	0	1	0	Segment.
16	1	0	0	0	0	0	1	0	0	Initial Segment.

A = PC=5 = cancel C.
B = UF=24.
C = Dl=1 = multisite code.
D = UF=4, 5, 20, 21.
E = MES=1, 5 = reservation.
F = MES=2, 6, 7 = closeout.
M = RC=0.
N = RC=1.
O = RC=2.

Patterns 5 and 6 must be repeated 16 times for all IIS values.

Patterns 14, 15 and 16 must be repeated 15 times for all valid NC values.

There are 88 interrogation patterns to be used.

Test Sequence

All 31,152 combinations of the 354 transponder states and 88 valid interrogation patterns must be used. Interrogate so that the transponder enters a given state and then use all interrogation patterns that will not change the state, followed by patterns

that will. Repeat with the now-acquired state. This must be done until all 31,152 combinations have been exhausted. Some combinations must be repeated because more than one interrogation pattern can change the state. Extraction of TAS (see flowchart) can be used for verification.

Required Negative Tests

If PC is not required to be 5, use all other codes. If MES is not required to be l, 2, 5, 6, 7, use all other codes.

If RC is not required to be 0, 1, 2, use RC=3.

Insert interrogation formats other than UF=4, 5, 20, 21, 24 one percent of the time to verify that they have no effect on the protocol.

UM Field Verification

During the test sequence when a multisite reservation is made (patterns 6, 12), the following reply will contain IIS and IDS in the UM field according to §2.2.19.2.1.2. Verify that the UM content is correct.

TAS Field Verification

During the test sequence when a TAS report is requested (pattern 14), the reply will contain the TAS field. Verify that the content of TAS is correct.

Timer Duration and Automatic Closeout Test

Arrange the sequence so that the timer runs out occasionally and verify timer duration and closeout.

Simultaneous Tests

While the transponder is undergoing the verification of the C-protocol, the interrogations can also be used to make tests for interface action and message content. These tests are described in Procedure #25.

Enhanced Uplink ELM Protocol

If the enhanced uplink ELM protocol is implemented, the procedure above is modified to reflect the automatic reservation of uplink ELMs. Transponder states 2, 3, 4, 5 and 6 are eliminated. The remaining states 1, 7, 8 and 9 are expanded due to conditions H, J and K varying for each II code. Condition H is expanded to 16 conditions, one for each II code. Condition I is no longer meaningful. Conditions J and K are also expanded to 16, one for each II code. State 1 for II code of 0 is simultaneous with the other 15 II codes varying between states 1, 7, 8 and 9. The number of iterations to run every possible combination is impractical. The test procedure will use different combinations of the additional possible states to provide verification of parallel operations. Interrogation patterns 14, 15 and 16 are further repeated 16 times for all IIS values. The verification procedure will include matching the reported segment data for each II code to that sent in the interrogation. The subset of the expanded states to run are:

1) 16 states, where the conditions are met once for each of the II codes.

2) 15 states, where the conditions are met for II code 0 along with one single II code.

3) 15 states, where the conditions are met for 2 non zero II codes, 3, 4, 5, etc., to 15 parallel non zero II codes and ending with all 16 II codes meeting the conditions.

The conditions for the other II codes not stipulated can be uniformly selected to provide a distribution of concurrent conditions.

The above results in 46 states to test in replacement of state 1, 46 states from state 7, 46 states to replace state 8 and 690 states to replace state 9.

2.5.4.25 Procedure #25 Uplink Interface, ELM-C

(§2.2.13.4 – interface)
(§2.2.20.1.4 – interface rate)

This test procedure verifies that the information contained in Comm-C interrogations passes out of the transponder within the specified time interval and that such information correctly replicates the received transmission content. This test is independent of the interface design.

Interrogation Pattern

UF=24.

MC=6320 different patterns, half containing two ONEs, half containing two ZEROs.

Test Sequence

If during the C-Protocol test procedure (Procedure #24), all segments have been received and are shifted out of the interface (Column K), verify that their content corresponds to the previously inserted patterns.

Verify that the content of four 16 segment ELMs can be extracted from the interface in any four second interval or, in one second if the transponder adheres to the enhanced uplink ELM protocol.

Interrogate with a burst of 16 segments and repeat 4 seconds later, one second later if the transponder adheres to the enhanced uplink ELM protocol.

Verify that the content of the first burst appears at the interface before the second burst is transmitted.

Verify the content of both bursts.

This test fits into the sequence of Procedure #24.

2.5.4.26 Procedure #26 Comm-D Protocol

(§2.2.19.2.1.1 – SD codes)
(§2.2.19.2.1.2 – UM codes)
(§2.2.19.2.2.1 and §2.2.19.2.2.2 – multisite)
(§2.2.20.2.3 through §2.2.20.2.3.6 – multisite)
(§2.2.20.2.1.1 through §2.2.20.2.1.1.5 – ELM-D)
(Figure 2-22 and Figure 2-23 – Flowchart)

This test procedure verifies that the Comm-D protocol is carried out correctly.

The test procedure follows the notation of transponder states and interrogation patterns as shown in the flowcharts.

Transponder States

#	E	F	
1	0	0	Not multisite, will accept cancellation or reservation.
2	0	1	Not multisite, will accept cancellation or reservation.
3	1	0	Multisite, will not accept closeout, cancellation, reservation.
4	1	1	Multisite, will accept closeout, cancellation, reservation.

E = T_{RD} timer running.
F = IIS = stored value.
States 3 and 4 are IIS-sensitive and must be used 16 times.

There are 35 transponder states to be used.

Transponder Design

The maximum number of segments that transponders are able to transmit in one burst varies from 4 to 16; the number of tests to be made varies with the burst capability.

Interrogation Patterns

#	H	G	A	B	C	D	I	
1	0	1	0	0	0	0	0	Ordinary interrogation.
2	0	1	0	0	0	1	0	Invalid closeout, DI wrong.
3	0	1	0	0	1	0	0	Invalid reservation, DI wrong.
4	0	1	0	1	0	0	0	Multisite, not for Comm-D.
5	0	1	0	1	0	1	0	Closeout.
6	0	1	0	1	1	0	0	Reservation.
7	0	1	1	0	0	0	0	Cancellation, not multisite.
8	0	1	1	0	0	1	0	Cancellation, not multisite.
9	0	1	1	0	1	0	0	Cancellation, not multisite.
10	0	1	1	1	0	0	0	Cancellation, multisite not for Comm-D.
11	0	1	1	1	0	1	0	Cancellation and possible closeout, multisite.
12	0	1	1	1	1	0	0	Cancellation, not multisite and reservation.
13	1	0	0	0	0	0	0	UF=24, not for Comm-D.
14	1	0	0	0	0	0	1	UF=24, command to transmit segments per SRS.

A = PC=6 cancel D.
B = DI=1 multisite.
C = MES=3, 6 reservation.
D = MES=4, 5, 7 closeout.
G = UF=4, 5, 20, 21.
H = UF=24.
I = RC=3.

Patterns 5, 6, 11, 12, must be used at least 16 times to provide for all II codes.

Pattern 14 must be used as often as necessary to exhaust the SRS and DR codes according to the capability of the transponder.

Verify that cancellation does not occur when the D-register of Figure 2-22 and Figure 2-23 is not set, i.e., when no request for transmission has been complied with yet.

Test Sequence

The number of combinations of transponder states and interrogation patterns is design dependent. All combinations must be exercised.

DR Verification

At the Comm-B downlink interface, apply a request for air-initiated Comm-B (DR=1), and at the Comm-D interface apply a request to send a Comm-D ELM (DR larger than 15).

Verify that Comm-B has priority by observing that the B-protocol must be closed out before the DR code of the Comm-D transaction appears in replies.

Verify that the DR field in DF=4, 5, 20, 21 correctly states the number of segments waiting at the interface to be transmitted.

UM Verification

If a multisite reservation is made during the test sequence (patterns 6, 12), the following reply will contain IIS and IDS in the UM field according to §2.2.19.2.1.2. Verify that the UM content is correct.

SRS Verification

Consider the SRS bit pattern as a code of length corresponding to the maximum burst capability of the transponder. Use all combinations containing two ONEs and all combinations containing two ZEROs for this word length as the test pattern for the following verifications.

Verify that the transponder correctly transmits the number and identity of segments requested in the SRS subfield of UF=24 with RC=3.

The identity of segments is indicated in the ND field of each segment and must be inserted at the ELM downlink interface.

Verify that if SRS requests a segment identity which is not available in this transaction, the transponder will send ND according to the request but will leave the MD field of that reply all ZEROs.

Required Negative Tests

If PC is not required to be 6, use all other codes. If DI is not required to be 1, use all other codes. If MES is not required to be 3, 4, 5, 6, 7 use all other codes.

Insert interrogation formats other than UF=4, 5, 20, 21, 24 one percent of the time to verify that they have no effect on the protocol.

Timer Duration and Automatic Closeout Test

Arrange the sequence so that the timer runs out occasionally and verify timer duration and closeout.

Simultaneous Tests

While the transponder is undergoing the verification of the D-Protocol, the number of interrogations can be used to make tests for interface action and message content. These tests are described in Procedures #27 and #28.

Enhanced Downlink ELM Protocol

If the transponder adheres to the enhanced multisite downlink ELM protocol as described in §2.2.21.3, the following test procedures **shall** verify that the enhanced protocol is carried out correctly by the transponder.

The transponder **shall** be tested according to the guidelines stipulated above with the following additions and/or modifications:

Transponder condition E is defined for non-selective and IIS values 1 - 15. The transponder condition F is no longer meaningful.

The test will be expanded to include the additional combinations of condition E since the condition exists for each II. The resulting transponder states consist of all combinations of conditions for each of the 16 II codes.

UM Verification

In all cases, verify that the transponder reports the proper state in the UM field and the report is for the IIS contained in the interrogation pattern.

DR Verification

Verify the DR code as described with the addition of DR code extraction for all IIS codes and under the conditions of concurrent B messages, B broadcast messages and downlink ELMs.

2.5.4.27 Procedure #27 Directed Comm-D

(§2.2.20.2.3.2 – protocol)

This test procedure verifies that multisite directed Comm-D transactions are carried out correctly by the transponder.

The comments on transponder design dependence of this test are essentially the same as presented in Procedure #21.

Interface Patterns of Test Sequence

During the D-protocol test procedure (Procedure #26) enter into the interface a downlink pattern containing DR corresponding to the number of segments to be transmitted, IDS=3 (the UM code for Comm-D reservation) and IIS corresponding to the desired destination's code.

Use all IIS codes from 1 to 15 and interrogate so that the downlink formats DF=4, 5, 20, 21 are used.

Verify that this directed Comm-D has not interrupted an existing reservation condition.

Reply and coding content are verified as part of Procedures #26 and #28 respectively.

2.5.4.28 Procedure #28 Comm-D Interface, Rate and Content

(§2.2.13.4 – interface)
(§2.2.20.2.4 – data rate)

This test procedure verifies that the downlink interface can sustain the required data rate and that the transponder transmits downlink content as entered.

Transponder Design

The Comm-D interface can exist as a separate port or as one direction of a bidirectional ELM (C/D) interface. The downlink port can be designed to take the ND and MD fields only, leaving the UF and KE generation to internal circuitry. Another design would need input for DF and KE as well.

The minimum input data rate for this interface must equal the maximum reply capability of the transponder. The maximum practical reply capability is 16 segments in four seconds, although that is not specified in this document.

Interface Patterns

For each ND code appropriate for the transponder under test, generate a total of 6320 MD patterns, half containing two ONEs and half containing two ZEROs.

Test Sequence

Use all required MD patterns and all ND patterns possible for this transponder.

Verify that the patterns are transmitted as entered.

Schedule Comm-D transactions at the maximum rate for which the transponder is designed (4 to 16 segment DELMs at a rate of one per 4 seconds for a standard DELM transponder, 16 segment DELMs at a rate of one per second for an enhanced DELM transponder).

Verify that the interface can supply new MD patterns at those rates.

Note: *It may be necessary to schedule more Comm-D transactions than are required for the protocol test alone.*

2.5.4.29 Not Used

2.5.4.30 Procedure #30 Sensitivity Level Operation (§2.2.22.1.1 and §2.2.22.1.5)

This test verifies that the transponder (1) accepts incoming UF=20, 21 interrogations containing a Sensitivity Level Command Message and passes all necessary information (IIS and SLC subfields) to the TCAS unit, and (2) receives sensitivity level information from the TCAS unit and correctly reports this information in outgoing DF=0, 16 replies.

a. Send a status = "on-board TCAS with vertical-only resolution capability" and a sensitivity level=6 to the transponder via the transponder/TCAS interface.

   Interrogate the transponder with a UF=0 and a UF=16 non-acquisition interrogation.

   Show that the transponder correctly reports the TCAS status and sensitivity level in the RI and SL fields respectively.

b. Interrogate the transponder with a UF=20 interrogation containing a Sensitivity Level Command Message (ADS1=0, ADS2=5, and TMS=0) with IIS=1 and SLC=4.

   Show that the IIS and SLC subfields are correctly output on the transponder/TCAS interface.

c. Interrogate the transponder with a UF=21 interrogation containing a Sensitivity Level Command Message with IIS=15 and SLC=5.

   Show that the IIS and SLC subfields are correctly output on the transponder/TCAS interface.

d. Send a sensitivity level=4 to the transponder via the transponder/TCAS interface. Interrogate the transponder with a UF=0 and a UF=16 non-acquisition interrogation.

   Show that the transponder correctly reports the TCAS status and sensitivity level in the RI and SL fields respectively.

2.5.4.31 Procedure #31 Transmission of RA Report to Mode S Sensor (§2.2.22.h and §2.2.22.1.2.1)

This test verifies that the transponder correctly determines the transponder/TCAS system capability (either FAA TSO-C119A or RTCA/DO-185A compatibility) based on communication with the on-board TCAS unit and then reports RA information in the appropriate format. This test requires that the transponder demonstrate proper operation with both FAA TSO-C119A and RTCA/DO-185A compatible transponder/TCAS interfaces.

This test verifies that the transponder correctly (1) receives RA information from the TCAS unit, (2) indicates to the ground (DR field in DF=4, 5, 20, and 21 replies) that it has information awaiting downlink, (3) transmits this information in DF=20, 21 replies, (4) retains RA information for 18 ±1 seconds following the end of the RA, and (5) (for RTCA/DO-185A compatible transponder/TCAS systems) properly indicates the end of the RA via the RA Terminated indicator.

Note: *The tests refer to a "TCAS bit" in the DR field of DF=4, 5, 20, and 21 replies. The TCAS bit is interpreted herein as bit 12 of the 5-bit (bits 9-13) DR field. That is, if DR=2, 3, 6, or 7, then the "TCAS bit" is set, and the transponder is therefore indicating that it has TCAS information available.*

2.5.4.31.1 Procedure #31 Transmission of RA Report for a Transponder Operating with an FAA TSO-C119A Compatible TCAS (§2.2.22.h, §2.2.22.1.2.1, §2.2.22.1.2.1.1, and §2.2.22.1.2.1.2)

a. ARA=0 and RAC=0:

Interrogate the transponder with UF=4, 5, 20, and 21 interrogations when no RA information has been received via the transponder/TCAS interface.

Show that the TCAS bit in the DR field is not set in the DF=4, 5, 20, and 21 replies.

b. ARA≠0 and RAC≠0:

Send ARA='10000000000000' and RAC='1000' to the transponder via the transponder/TCAS interface.

Interrogate the transponder with UF=4, 5, 20, and 21 interrogations.

Show that the 'TCAS bit' in the DR field is set in the DF=4, 5, 20, and 21 replies.

Interrogate the transponder with UF=4, 5, 20, and 21 interrogations with RR=19.

Show that the TCAS bit in the DR field is set in the DF=20 and 21 replies. Show that the ARA and RAC information is correctly reported in the DF=20 and 21 replies.

Send ARA=0 and RAC=0 to the transponder via the transponder/TCAS interface.

Interrogate the transponder once per second for the next 20 seconds with a UF=4 interrogation with RR=19.

Show that for 18 ±1 seconds after the end of the RA, the TCAS bit in the DR field in the reply remains set and that ARA=1000000000000 and RAC=1000 are reported. Show that after 18 ±1 seconds, the TCAS bit in the DR field in the reply is not set and that ARA=0 and RAC=0 are reported.

c. ARA≠0 and RAC=0:

Repeat all portions of step b replacing every instance of RAC=1000 with RAC=0.

d. ARA=0 and RAC≠0:

Send ARA=0 and RAC='1000' to the transponder via the transponder/TCAS interface.

Interrogate the transponder with UF=4, 5, 20, and 21 interrogations.

Show that the TCAS bit in the DR field is not set in the DF=4, 5, 20, and 21 replies.

Interrogate the transponder with UF=4, 5, 20, and 21 interrogations with RR=19.

Show that the 'TCAS bit' in the DR field is not set in the DF=20 and 21 replies.

Send ARA=0 and RAC=0 to the transponder via the transponder/TCAS interface.

Interrogate the transponder once per second for the next 20 seconds with a UF=4 interrogation with RR=19.

Show that the TCAS bit in the DR field in the replies is not set.

e. ARA≠0, RAC≠0, new ARA and RAC values received during 18-second time-out:

Send ARA='00000100000000' and RAC='0100' to the transponder via the transponder/TCAS interface.

Interrogate the transponder with UF=4, 5, 20, and 21 interrogations.

Show that the TCAS bit in the DR field is set in the DF=4, 5, 20, and 21 replies.

Interrogate the transponder with UF=4, 5, 20, and 21 interrogations with RR=19.

Show that the TCAS bit in the DR field is set in the DF=20 and 21 replies. Show that the ARA and RAC information is correctly reported in the DF=20 and 21 replies.

Send the following sequence (60 seconds total) of ARA and RAC data to the transponder via the transponder/TCAS interface.

For 5 seconds, ARA=0 and RAC=0;

For the next 5 seconds, ARA='10000000000000' and RAC='1000';

For the next 5 seconds, ARA='01000000000000' and RAC=0;

For the next 5 seconds, ARA=0 and RAC=0;

For the next 5 seconds, ARA=0 and RAC='0100';

For the next 5 seconds, ARA='01000000000000' and RAC=0;

For the next 30 seconds, ARA=0 and RAC=0.

Interrogate the transponder once per second during the 60 seconds described above with UF=4 interrogations with RR=19.

Show that the TCAS bit in the DR field in the replies remains set for the first 48 ±1 seconds and is set to ZERO thereafter. Show that in the replies:

For the first 5 seconds, ARA='00000100000000' and RAC='0100';

For the next 5 seconds, ARA=‘10000000000000’ and RAC=‘1000’;

For the next 38 ±1 seconds, ARA=‘01000000000000’ and RAC=0;

For the next 12 ±1 seconds, ARA=0 and RAC=0.

RAT=1 from 16 seconds to 25 seconds and from 31 seconds to 48 seconds, and that RAT=0 at other times.

2.5.4.31.2 Procedure #31 Transmission of RA Report for a Transponder Operating with an RTCA/DO-185A Compatible TCAS (§2.2.22.h, §2.2.22.1.2.1, §2.2.22.1.2.1.1, and §2.2.22.1.2.1.3)

a. ARA=0 and RAC=0:

Interrogate the transponder with UF=4, 5, 20, and 21 interrogations when no RA information has been received via the transponder/TCAS interface.

Show that the ‘TCAS bit’ in the DR field is not set in the DF=4, 5, 20, and 21 replies.

b. ARA≠0 and RAC≠0:

Send ARA=‘10000000000000’, RAC=‘1000’, RAI=0, MTE=0, TTI=1, and TID=‘AAAAAA’ {HEX} to the transponder via the transponder/TCAS interface.

Interrogate the transponder with UF=4, 5, 20, and 21 interrogations.

Show that the ‘TCAS bit’ in the DR field is set in the DF=4, 5, 20, and 21 replies.

Interrogate the transponder with UF=4, 5, 20, and 21 interrogations with RR=19.

Show that the ‘TCAS bit’ in the DR field is set in the DF=20 and 21 replies.

Show that the ARA, RAC, RAT(=0), MTE, TTI, and TID are correctly reported in the DF=20 and 21 replies.

Send ARA=0, RAC=0, RAI=1, and MTE=0 to the transponder via the transponder/TCAS interface.

Interrogate the transponder once per second for the next 20 seconds with a UF=4 interrogation with RR=19.

Show that for 18 ±1 seconds after the end of the RA, the ‘TCAS bit’ in the DR field in the reply remains set, and that RAT=1, ARA=‘10000000000000’, RAC=‘1000’, MTE=0, TTI=1, and TID=‘AAAAAA’ {HEX} are reported. Show that after 18 ±1 seconds, the ‘TCAS bit’ in the DR field in the reply is not set and that RAT, ARA, RAC, MTE, TTI, and TID are all set to ZERO.

c. ARA≠0 and RAC=0:

Repeat all portions of step b replacing every instance of RAC=‘1000’ with RAC=0, and replacing TTI=1, TID=‘AAAAAA’ {HEX} with TTI=2, TIDA=‘0101010101010’, TIDR=‘1010101’, TIDB=‘010101’.

d. ARA=0 and RAC≠0:

Send ARA=0, RAC=‘1000’, RAI=1, and MTE=0 to the transponder via the transponder/TCAS interface.

Interrogate the transponder with UF=4, 5, 20, and 21 interrogations.

Show that the ‘TCAS bit’ in the DR field is not set in the DF=4, 5, 20, and 21 replies.

Interrogate the transponder with UF=4, 5, 20, and 21 interrogations with RR=19.

Show that the ‘TCAS bit’ in the DR field is not set in the DF=20 and 21 replies.

Send ARA=0, RAC=0, RAI=1, and MTE=0 to the transponder via the transponder/TCAS interface.

Interrogate the transponder once per second for the next 20 seconds with a UF=4 interrogation with RR=19.

Show that the ‘TCAS bit’ in the DR field in the replies is not set.

e. ARA≠0, RAC≠0, new ARA and RAC values received during 18-second time-out:

Send ARA=‘00000100000000’, RAC=‘0100’, RAI=0, MTE=0, TTI=1, and TID=‘555555’ {HEX} to the transponder via the transponder/TCAS interface.

Interrogate the transponder with UF=4, 5, 20, and 21 interrogations.

Show that the ‘TCAS bit’ in the DR field is set in the DF=4, 5, 20, and 21 replies.

Interrogate the transponder with UF=4, 5, 20, and 21 interrogations with RR=19.

Show that the ‘TCAS bit’ in the DR field is set in the DF=20 and 21 replies. Show that the ARA, RAC, RAT(=0), MTE, TTI, and TID are correctly reported in the DF=20 and 21 replies.

Send the following sequence (60 seconds total) of ARA and RAC data to the transponder via the transponder/TCAS interface.

For 5 seconds, ARA=0, RAC=0, RAI=1, MTE=0;

For the next 5 seconds, ARA=‘10000000000000’, RAC=‘1000’, RAI=0, MTE=0, TTI=1, and TID=‘AAAAAA’ {HEX};

For the next 5 seconds, ARA=‘01000000000000’, RAC=0, RAI=0, MTE=0, TTI=1, and TID=‘555555’ {HEX};

For the next 5 seconds, ARA=0, RAC=0, RAI=1, and MTE=0;

For the next 5 seconds, ARA=0, RAC=‘0100’, RAI=1, and MTE=0;

For the next 5 seconds, ARA=‘01000000000000’, RAC=0, RAI=0, MTE=0, TTI=1, and TID=‘555555’ {HEX};

For the next 30 seconds, ARA=0, RAC=0, RAI=1, and MTE=0.Interrogate the transponder once per second during the 60 seconds described above with UF=4 interrogations with RR=19.

Show that the ‘TCAS bit’ in the DR field in the replies remains set for the first 48 ±1 seconds and is set to ZERO thereafter. Show that in the replies:

For the first 5 seconds, ARA=‘00000100000000’, RAC=‘0100’, RAT=1, MTE=0, TTI=1, and TID=‘555555’ {HEX};

For the next 5 seconds, ARA=‘10000000000000’, RAC=‘1000’, RAT=0, MTE=0, TTI=1, and TID=‘AAAAAA’ {HEX};

For the next 5 seconds, ARA=‘01000000000000’, RAC=0, RAT=0, MTE=0, TTI=1, and TID=‘555555’ {HEX};

For the next 10 seconds, ARA=‘01000000000000’, RAC=0, RAT=1, MTE=0, TTI=1, and TID=‘555555’ {HEX};

For the next 5 seconds, ARA=‘01000000000000’, RAC=0, RAT=0, MTE=0, TTI=1, and TID=‘555555’ {HEX};

For the next 18 ±1 seconds, ARA=‘01000000000000’, RAC=0, RAT=1, MTE=0, TTI=1, and TID=‘555555’ {HEX};

For the next 12 ±1 seconds, ARA=0, RAC=0, RAT=0, and MTE=0.

2.5.4.32 Procedure #32 Transmission of TCAS Capability Information to a Mode S Sensor (§2.2.22.h and §2.2.22.1.2.2) and to other TCAS Aircraft (§2.2.22.1.5)

This test verifies that the transponder receives operational information from its associated TCAS unit and correctly reports this information in Data Link Capability Reports to a Mode S sensor and in special surveillance replies to another TCAS aircraft. This test requires that the transponder demonstrate proper operation with both FAA TSO-C119A and RTCA/DO-185A compatible transponder/TCAS interfaces.

2.5.4.32.1 Procedure #32 Transmission of TCAS Capability Information to a Mode S Sensor (§2.2.22.h, §2.2.22.1.2.2, §2.2.22.1.2.2.1, and §2.2.22.1.2.2.2) and to other TCAS Aircraft (§2.2.22.1.5) for a Transponder Operating with an FAA TSO-C119A Compatible TCAS

a. Enable the transponder only (i.e., establish the state where the transponder/TCAS interface is not operational).

b. Interrogate the transponder with a non-acquisition UF=0 interrogation.

   Show that the transponder replies with the correct capability information in the DF=0 reply (i.e., RI=0).

c. Interrogate the transponder with the following four interrogations:

UF=4 with RR=17 and DI≠7;

UF=5 with RR=17 and DI≠7;

UF=20 with RR=17, DI=7, and RRS=0;

UF=21 with RR=17, DI=7, and RRS=0.

Show, in each of the four cases, that the transponder replies with the correct capability information in the DF=20, 21 replies (i.e., BDS1=1, BDS2=0, bit 48=0, and bits 69, 70, 71, and 72 = 0000).

d. Repeat the procedures in steps b and c above for each of the following 16 cases:

(1) TCAS reports "on-board TCAS with resolution capability inhibited" (RI=2) to the transponder via the transponder/TCAS interface.

Show that the transponder replies with RI=2 in the DF=0 reply.

Show that the transponder replies with bit 48=1 and bits 69, 70, 71, and 72 = '0000' in the DF=20, 21 replies.

(2) TCAS reports "on-board TCAS with vertical-only resolution capability" (RI=3) to the transponder via the transponder/TCAS interface.

Show that the transponder replies with RI=3 in the DF=0 reply.

Show that the transponder replies with bit 48=1 and bits 69, 70, 71, and 72 = '0100' in the DF=20, 21 replies.

(3) TCAS reports "on-board TCAS with vertical and horizontal resolution capability" (RI=4) to the transponder via the transponder/TCAS interface.

Show that the transponder replies with RI=4 in the DF=0 reply.

Show that the transponder replies with bit 48=1 and bits 69, 70, 71, and 72 = '1000' in the DF=20, 21 replies.

(4)-(16) TCAS reports RI=0, 1, 5, 6, 7, 8, 9, 10, 11, 12, 13, 14, and 15 to the transponder via the transponder/TCAS interface.

Show that for each case, the transponder replies with RI=0 in the DF=0 reply.

Show that for each case, the transponder replies with bit 48=0 and bits 69, 70, 71, and 72 = '0000' in the DF=20, 21 replies.

2.5.4.32.2 Procedure #32 Transmission of TCAS Capability Information to a Mode S Sensor (§2.2.22.h, §2.2.22.1.2.2, §2.2.22.1.2.2.1, and §2.2.22.1.2.2.3) and to other TCAS Aircraft (§2.2.22.1.5) for a Transponder Operating with an RTCA/DO-185A Compatible TCAS

Repeat the procedures provided in Steps "a" through "d" of §2.5.4.32.1 for an RTCA/DO-185A compatible transponder/TCAS interface.

Show that the transponder properly reports with the RI field in DF=0 replies set exactly as provided in Steps "a" through "d" of §2.5.4.32.1.

Show that the transponder properly reports with DF=20, 21 replies that are exactly the same as those specified in Steps "b" through "d" of §2.5.4.32.1 with the exception that bits 70 and 71 = "don't care" for the four cases in Step "c" and bit 71 = 1 for cases 1 – 3.

2.5.4.33 Procedure #33 TCAS or transponder/TCAS Interface Failure During Transmission of RA Report and Data Link Capability Report to a Mode S Sensor (§2.2.22.1.2.1.3 and §2.2.22.1.2.2.3)

This test applies to RTCA/DO-185A compatible systems.

a. Send ARA='10000000000000', RAC='1000', RAI=0, MTE=0, TTI=1, and TID='AAAAAA' {HEX} to the transponder via the transponder/TCAS interface once per second for 5 seconds.

During the 5th second, cause the TCAS unit to report a TCAS failure to the transponder (i.e., RI=0 and SL 1).

Interrogate the transponder once per second during the 5 seconds described above and for an additional 25 seconds (30 seconds total) with UF=4 interrogations with RR=19 and DI 7.

Show that in the DF=20 replies:

For the first 23 ±1 seconds, the 'TCAS bit' is set in the DR field. Thereafter, it is cleared.

For the first 5 seconds, ARA='10000000000000', RAC='1000', RAT=0, MTE=0, TTI=1, and TID='AAAAAA' {HEX}.

For the next 18 ±1 seconds, ARA='10000000000000', RAC='1000', RAT=1, MTE=0, TTI=1, and TID='AAAAAA' {HEX}.

For the remaining 7 ±1 seconds, ARA, RAC, MTE, TTI, and TID all = 0.

b. Repeat the steps in test a, except during the 5th second, cause the transponder to recognize a failure on the transponder/TCAS interface (i.e., disconnect or otherwise interrupt the interface).

The results should be the same as in test a.

c. Send "on-board TCAS with vertical-only resolution capability" (RI=3) to the transponder via the transponder/TCAS interface for 5 seconds.

During the 5th second, cause the transponder to recognize a failure on the transponder/TCAS interface (i.e., disconnect or otherwise interrupt the interface).

Interrogate the transponder once per second for 30 seconds with UF=4 interrogations with RR=17 and DI 7.

Show that in the DF=20 replies:

For the first 5 seconds, bit 48=1, and bits 69, 70, 71, and 72 = '0110'.

For the next 25 seconds, bits 48, 69, 70, 71, and 72 all = 0.

2.5.4.34 Procedure #34 Coordination (§2.2.22.1.3 and §2.2.22.1.4)

This test verifies that the transponder (1) accepts incoming UF=16 interrogations containing a TCAS Resolution Message and passes all necessary information to the TCAS unit, and (2) receives coordination information from the TCAS unit and correctly reports this information in outgoing DF=16 replies. This test requires that the transponder demonstrate proper operation with both FAA TSO-C119A and RTCA/DO-185A compatible transponder/TCAS interfaces.

2.5.4.34.1 Procedure #34 Coordination (§2.2.22.1.3 and §2.2.22.1.4.1) for a Transponder Operating with an FAA TSO-C119A Compatible TCAS

a. Interrogate the transponder with a UF=16 interrogation with UDS=48, MTB=0, CVC=0, VRC=2, CHC=0, HRC=0, VSB=7 when no resolution advisory information has been received from the TCAS unit.

   Show that the transponder sends a DF=16 reply with VDS=48, ARA=0, and RAC=0.

   Show that the coordination information in the MU field is correctly output on the transponder/TCAS interface.

b. Send ARA=0 and RAC='0100' to the transponder from the TCAS unit.

   Interrogate the transponder with a UF=16 interrogation with UDS=48, MTB=0, CVC=0, VRC=2, CHC=0, HRC=0, VSB=7.

   Show that the transponder sends a DF=16 reply with VDS=48.

   Show that the coordination information in the MU field is correctly output on the transponder/TCAS interface.

c. Send ARA='00000100000000' and RAC='0100' to the transponder from the TCAS unit.

   Interrogate the transponder with a UF=16 interrogation with UDS=48, MTB=0, CVC=2, VRC=0, CHC=0, HRC=0, VSB=13.

   Show that the transponder sends a DF=16 reply with VDS=48, ARA='00000100000000', and RAC='0100'.

   Show that the coordination information in the MU field is correctly output on the transponder/TCAS interface.

d. Send ARA='00000100000000' and RAC=0 to the transponder from the TCAS unit.

   Interrogate the transponder with a UF=16 interrogation with UDS=48, MTB=0, CVC=2, VRC=0, CHC=0, HRC=0, VSB=13.

   Show that the transponder sends a DF=16 reply with VDS=48.

   Show that the coordination information in the MU field is correctly output on the transponder/TCAS interface.

e. Send ARA=0 and RAC=0 to the transponder from the TCAS unit.

Interrogate the transponder with a UF=16 interrogation with UDS=48, MTB=0, CVC=0, VRC=1, CHC=0, HRC=0, VSB=14.

Show that the transponder sends a DF=16 reply with VDS=48, ARA=0, and RAC=0.

Show that the coordination information in the MU field is correctly output on the transponder/TCAS interface.

2.5.4.34.2 Procedure #34 Coordination (§2.2.22.1.3 and §2.2.22.1.4.2) for a Transponder Operating with an RTCA/DO-185A Compatible TCAS

a. Interrogate the transponder with a UF=16 interrogation with UDS=48, MTB=0, CVC=0, VRC=2, CHC=0, HRC=0, VSB=7 when no resolution advisory information has been received from the TCAS unit.

Show that the transponder sends a DF=16 reply with VDS=48, ARA=0, RAC=0, RAT=0, and MTE=0.

Show that the coordination information in the MU field is correctly output on the transponder/TCAS interface.

b. Send ARA=0, RAC='0100', RAI=1, and MTE=0 to the transponder from the TCAS unit.

Interrogate the transponder with a UF=16 interrogation with UDS=48, MTB=0, CVC=0, VRC=2, CHC=0, HRC=0, VSB=7.

Show that the transponder sends a DF=16 reply with VDS=48.

Show that the coordination information in the MU field is correctly output on the transponder/TCAS interface.

c. Send ARA='11100000000000', RAC='0100', RAI=0, and MTE=0 to the transponder from the TCAS unit.

Interrogate the transponder with a UF=16 interrogation with UDS=48, MTB=0, CVC=2, VRC=0, CHC=0, HRC=0, VSB=13.

Show that the transponder sends a DF=16 reply with VDS=48, ARA='11100000000000', RAC='0100', RAT=0, and MTE=0.

Show that the coordination information in the MU field is correctly output on the transponder/TCAS interface.

d. Send ARA='11100000000000', RAC=0, RAI=0, and MTE=1 to the transponder from the TCAS unit.

Interrogate the transponder with a UF=16 interrogation with UDS=48, MTB=0, CVC=2, VRC=0, CHC=0, HRC=0, VSB=13.

Show that the transponder sends a DF=16 reply with VDS=48, ARA='11100000000000', RAC=0, RAT=0, and MTE=1.

Show that the coordination information in the MU field is correctly output on the transponder/TCAS interface.

e. Send ARA=0, RAC=0, RAI=1, MTE=0 to the transponder from the TCAS unit. This RAI=1 is intended to represent the transition from RAI=0 to RAI=1 indicating the end of ARA='11100000000000' in d, above.

Interrogate the transponder with a UF=16 interrogation with UDS=48, MTB=0, CVC=0, VRC=1, CHC=0, HRC=0, VSB=14.

Show that the transponder sends a DF=16 reply with VDS=48.

Show that the coordination information in the MU field is correctly output on the transponder/TCAS interface.

2.5.4.35 Procedure #35 MU Messages To TCAS (§2.2.22.1.3)

This test verifies that the transponder correctly: 1) accepts UF=16 interrogations with MU data containing a TCAS Resolution Message (UDS=48) and passes all necessary information to the TCAS unit; 2) accepts UF=16 broadcast interrogations with MU data containing a TCAS Broadcast Message (UDS=50) and passes all necessary information to the TCAS unit; 3) does not transfer the MU data of UF=16 discrete interrogations with UDS≠48 and broadcast interrogations with UDS≠50 to the TCAS unit.

a. Interrogate the transponder with a valid UF=16 TCAS Coordination Message (UDS1=3, UDS2=0). Verify that the transponder replies with a valid DF=16 Coordination Reply Message and the data content of the MU field is correctly output on the transponder/TCAS interface.

b. In one second, interrogate the transponder with ten UF=16 interrogations, each containing a TCAS Broadcast Message (UDS1=3, UDS2=2, and interrogation address all ONEs), each containing a unique “own” Mode S address (i.e., ten different Mode S addresses). Verify that the MU data for each interrogation is correctly output on the transponder/TCAS interface.

c. Interrogate the transponder at the rate of 10 per second or less with 255 UF=16 interrogations addressed to the transponder with UDS values from 0 to 255 except for UDS=48. Verify that the transponder does not output the messages over the transponder/TCAS interface.

d. Interrogate the transponder at the rate of 10 per second or less with 255 UF=16 broadcast interrogations with UDS values from 0 to 255 except for UDS=50. Verify that the transponder does not output the messages over the transponder/TCAS interface.

2.5.4.36 Procedure #36 Transponder Replies to Incoming TCAS Resolution Messages (§2.2.22.2.1)

This test verifies that (1) whenever the transponder replies with a valid Coordination Reply Message to an incoming TCAS Resolution Message, the incoming message is successfully delivered to the TCAS unit; and (2) whenever the transponder's internal queue is full or some other condition is present which would prevent delivery of the message to TCAS, the transponder does not reply with a valid Coordination Reply Message to an incoming TCAS Resolution Message and does not pass the incoming data to TCAS.

a. Interrogate the transponder with a UF=16 interrogation containing a valid TCAS Resolution Message when all of the following conditions are true: the transponder is reporting that it has an operational TCAS; no transponder queues are full; and no TCAS failure conditions exist.

   Demonstrate that the transponder transmits a valid Coordination Reply Message and that the incoming coordination information is correctly output on the transponder/TCAS interface.

b. Interrogate the transponder with a UF=16 interrogation containing a valid TCAS Resolution Message when the transponder queue is full. Demonstrate that the transponder does not send a valid Coordination Reply Message and does not output the incoming coordination information on the transponder/TCAS interface.

   Demonstrate that when the queue is full the transponder still replies to interrogations that do not contain information directed to the transponder/TCAS interface.

c. Interrogate the transponder with a UF=16 interrogation containing a valid TCAS Resolution Message when a TCAS failure condition is present (the transponder is reporting no resolution advisory capability).

   Demonstrate that the transponder does not send a valid Coordination Reply Message and does not output the incoming coordination information on the transponder/TCAS interface.

   Demonstrate that when a TCAS failure is present the transponder still replies to interrogations that do not contain information directed to the transponder/TCAS interface.

   Note: *When the transponder does not send a valid reply, it may either send no reply or send a DF=16 interrogation with all 56 bits of the MV field equal to ZERO.*

2.5.4.37 Procedure #37 Transponder/TCAS Throughput (§2.2.22 b and g)

This test verifies that the interrogation input rate requirement and the reply rate limiting requirement referenced above are met by the transponder. In addition, this test is important for demonstrating that the transponder's internal structures (e.g., queues, timing) have been designed in such a way that they are compatible with any TCAS unit with which the transponder is paired.

a. Interrogate the transponder with UF=16 interrogations for 5 seconds at a continuous rate of 16.6 milliseconds, i.e., 60 interrogations per second.

Demonstrate that the transponder accepts all interrogations, transmits a valid reply to each interrogation, and correctly outputs the information on the transponder/TCAS interface in the order that it was received by the transponder.

b. Interrogate the transponder with UF=16 interrogations for 5 seconds at a rate greater than that at which the transponder can accept all interrogations.

Note: *In some installations, interrogating at a high rate with all UF=16 interrogations causes the transponder's internal queue to fill, thus stopping the transponder's acceptance of and reply to interrogations because of the full queue, rather than because of the reply rate limiting. If this is the case, it is necessary to interrogate the transponder with a mix of short and long interrogations; this mix should include the largest number of UF=16 interrogations that is possible while at the same time avoiding any queue overflow. This will allow the reply rate limiting feature to be tested.*

Demonstrate that the reply rate limiting feature is exercised (i.e., there is a mechanism which recognizes the high interrogation rate and stops the transponder from accepting and replying to replies before the transponder overheats or otherwise becomes adversely affected).

Demonstrate that the transponder can accept and reply to at least the number of interrogations specified in §2.2.13.3.1.c.

Demonstrate that for each accepted interrogation, and only for each accepted interrogation, the transponder transmits a valid reply and correctly outputs the information on the transponder/TCAS interface in the order that it was received by the transponder.

c. Interrogate the transponder with UF=16 interrogations at a burst rate greater than that which the transponder can accept. Maintain the burst scenario for at least 5 seconds.

Note: *Burst interrogations must be used to insure that the TCAS interface has not failed due to lack of periodic data updates.*

Cause the TCAS test unit to accept information from the transponder at the slowest rate possible including a retry while still conforming to the transponder/TCAS interface protocols.

Demonstrate that for each accepted interrogation, and only for each accepted interrogation, the transponder transmits a valid reply and correctly outputs the information on the transponder/TCAS interface in the order that it was received by the transponder.

2.5.4.38 Procedure #38 Transponder Communication Timing (§2.2.22.2.4)

This test verifies that the communications timing requirement specified in §2.2.22.2.4 is met.

a. Demonstrate that the elapsed time from the transponder's receipt of an incoming UF=16 interrogation containing a TCAS Resolution Message to the receipt by the TCAS test unit from the TCAS/transponder interface is less than or equal to 0.01 second.

Note: *This assumes an interrogation rate less than or equal to 60 interrogations per second.*

2.5.4.39 Procedure #39 TCAS Crosslink (§2.2.14.4.13, §2.2.14.4.7, and §2.2.18.2.10)

This test verifies that the transponder (1) correctly reports the Crosslink Capability (CC) in DF=0 replies, and (2) decodes the DS field in UF=0 interrogations and correctly responds with the contents of the ground initiated Comm-B register in the MV field of the corresponding DF=16 reply.

a. Interrogate the transponder with UF=0, RL=0 interrogations. Verify that the CC field (bit 7) is a one in each DF=0 reply requested.

b. Generate data for each defined ground-initiated Comm-B message for each of the Comm-B registers that can be controlled via an interface or are internal to the transponder. The data content for each register should be unique so that it can be distinguished from all others. Interrogate the transponder with UF=0, RL=1, and all combinations of DS (1-255). Verify that the contents of the MV field of each DF=16 reply (whose register could be loaded with a test message) matches the contents of the corresponding Comm-B register requested.

During the Comm-B protocol test procedure (Procedure #18) or as an extension of the above test, use a TCAS Crosslink type interrogation to extract the ground-initiated Comm-B registers in order to verify the Crosslink protocol operates and correctly reports the proper ground-initiated Comm-B data as the transponder changes Comm-B protocol state (if done as part of Procedure #18, interrogate with UF=0, RL=1, DS = 1 -255 when interrogating with ground MB extraction).

2.6 Test Procedures for Elementary Surveillance (ELS) Compliant Transponder (§2.2.24)

No test procedure required as §2.2.24 is introductory material for ELS.

2.6.1 Ground Initiated Comm-B (§2.2.24.1)

No test procedure required as multiple GICB extractions of the applicable registers are performed in subsequent tests.

2.6.2 Surveillance Identifier ("SI") Code Requirements (§2.2.24.2 and §2.2.24.2.1)

a. Perform Procedure #4 - Non-Selective Lockout Tests for all "II" and "SI" codes as required by §2.5.4.4. (§2.2.18.2.4)

b. Perform Procedure #5 - Selective Lockout Tests for all "II" and "SI" codes as required by §2.5.4.5. (§2.2.18.2.5)

2.6.2.1 MOPS Requirements Relevant to "SI" (§2.2.24.2.1)

Appropriate test requirements to validate "SI" functions were previously provided in §2.6.2.

2.6.3 Declaration of Capability in Register 10_{16} – Data Link Capability Report (§2.2.24.3)

No test procedure required.

2.6.3.1 Purpose and Definition (§2.2.24.3.1)

No direct test procedure required as format of each required bit in Register 10_{16} is verified in subsequent tests.

2.6.3.2 Data Requirements (§2.2.24.3.2)

Introduction:

The purpose of this procedure is to verify the setting of the Data Link Capability Report as required in §2.2.24.3.2 when no capability has been established. The setting of appropriate bits in Register 10_{16} as capability is established or changed is demonstrated or verified in subsequent sections.

Test Procedure:

Ensure that **NO** Aircraft Identification or Aircraft Registration data is being provided to the transponder.

Ensure that the TCAS / Transponder interface is **NOT ACTIVE**. If the interface is active, TCAS will provide data to set the Data Link Capability and thereby compromise the results of the following tests. Likewise, TCAS could attempt to set the Resolution Advisory Report and thereby compromise the results of the following tests.

Ensure that no other data is being provided to the transponder that could result in the loading of BDS registers internal to the transponder.

Disable the Extended Squitter and Mode-S Specific Services ("MSSS") functions prior to starting the following procedures in order to keep from setting various BDS registers during the following tests.

2.6.3.2.1 Bit 1 –through- 8, BDS Code (§2.2.24.3.2.1)

Test Procedure:

Interrogate the transponder with the following GICB Extraction interrogation in order to extract the Register 10_{16} Data Link Capability Report.

REGISTER 10_{16} DATA LINK CAPABILITY GICB EXTRACTION DATA SOURCE INTERROGATION SETUP					
1 ---- 5	6 ---- 8	9 --- 13	14-16	17 -- 20	21 ---------- 32
				"SD"	
"UF" =	**"PC" =**	**"RR" =**	**"DI" =**	**"IIS" =**	**"NOT ASSIGNED" =**
4	0	**17** (11 HEX)	**0**	0	0

Verify that the transponder replies with a "DF" = 20 reply with bit **33** –through- **40** ("BDS" subfield (bit **1** –through- **8** of the "MB" field)] set to 10 HEX (0001 0000 binary).

2.6.3.2.2 Bit 17 –through- 23, Declaration of Mode-S Subnetwork Number (§2.2.24.3.2.2)

Test Procedure:

Continue to interrogate the transponder as required in §2.6.3.2.1.

Verify that the transponder replies with a "DF" = 20 reply with bit **49** – through- **55** [("Mode S Subnetwork Version Number" subfield (bit **17** –through- **23** of the "MB" field)] encoded with a value of **"3"** or more.

2.6.3.2.3 Bit 25, Declaration of No Mode S Specific Services Capability (§2.2.24.3.2.3)

Test Procedure:

Continue to interrogate the transponder as required in §2.6.3.2.1.

Verify that the transponder replies with a "DF" = 20 reply with bit **57** [Mode S Specific Services Capability (bit **25** of the "MB" field)] set to ZERO (0) to indicate NO Mode S Specific Services Capability.

Note: *Servicing of Registers 02_{16}, 03_{16}, 04_{16}, 10_{16}, 17_{16} to $1C_{16}$, 20_{16} and 30_{16} does not constitute Mode S Specific Services Capability.*

2.6.3.2.4 Bit 33, Aircraft Identification Reporting Capability (§2.2.24.3.2.4)

RHS Commentary: ***Changed Bit 23 to 33. Remove this commentary after making change to review copy.***

Test Procedure:

Continue to interrogate the transponder as required in §2.6.3.2.1.

Verify that the transponder replies with a "DF" = 20 reply with bit **65** ["AIS" subfield (bit **33** of the "MB" field)] set to ZERO (0) to indicate NO Aircraft Identification capability.

2.6.3.2.5 Bit 35, Surveillance Identifier Code (SI) (§2.2.24.3.2.5)

Test Procedure:

Continue to interrogate the transponder as required in §2.6.3.2.1.

Verify that the transponder replies with a "DF" = 20 reply with bit **67** [Surveillance Identifier (SI) (bit **35** of the "MB" field)] set to ONE (1) to indicate that the transponder DOES Have "SI" Capability.

2.6.3.2.6 Bit 36, Common Usage GICB Capability Report (§2.2.24.3.2.6, 2.2.24.4.4)

Test Procedure:

Continue to interrogate the transponder as required in §2.6.3.2.1.

Verify that the transponder replies with a "DF" = 20 reply with bit **68** [Common Usage GICB Capability Report (bit **36** of the "MB" field)] set to ZERO (0) to indicate that there has been no change in the Common Usage GICB Capability Report, Register 17_{16}.

2.6.4 Register 17_{16}, Common Usage GICB Capability Report (§2.2.24.4)

No test procedure required.

2.6.4.1 Purpose and Definition (§2.2.24.1)

No direct test procedure required as format of each required bit in Register 17_{16} is verified in subsequent tests.

2.6.4.2 Data Requirements (§2.2.24.2)

Introduction:

The purpose of this procedure is to verify the setting of the Common Usage GICB Capability Report as required in §2.2.24.4.2 when no capability has been established. The setting of appropriate bits in Register 17_{16} as capability is established or changed is demonstrated or verified in subsequent sections.

Test Procedure:

Ensure that the conditions established in §2.6.3.2 are retained.

2.6.4.2.1 Required Servicing of Register 17_{16} Associated with Register 20_{16} and 21_{16} as an Option (§2.2.24.4.2.1 and 2.2.24.4.2.2)

Test Procedure:

Interrogate the transponder with the following GICB Extraction interrogation in order to extract the Register 17_{16} Common Usage GICB Capability Report.

REGISTER 17_{16} COMMON USAGE GICB CAPABILITY GICB EXTRACTION EXTENDED DATA SOURCE INTERROGATION SETUP									
1 ---- 5	6 ---- 8	9 --- 13	14-16	17 -- 20	21 -- 24	25	26	27—28	29 --- 32
				"SD"					
"UF" =	**"PC" =**	**"RR" =**	**"DI" =**	**"IIS" =**	**"RRS =**	**"X" =**	**"LOS" =**	**"XX" =**	**"TMS" =**
4	0	**17** (11 HEX)	**7**	0	**7**	0	0	0	0

Verify that the transponder replies with a "DF" = 20 reply with:

a. Bits **33** –through- **60** (bits **1** –through- **28** of the "MB" field) set to ZERO (0) to indicate NO Capability or capability changes in the Common Usage GICB Capability Report, Register 17_{16}.

b. Bits **61** –through- **88** (bits **29** –through- **56** of the "MB" field) set to ZERO (0) since these bits are Reserved or "Don't Care".

2.6.4.2.2 Required Servicing of Register 17_{16} Associated with Optional Register 21_{16} (§2.2.24.4.2.2)

Appropriate procedures to validate the setting of Register 17_{16} bits associated with Register 21_{16} prior to establishing any capability in the transponder installation were demonstrated in (§2.6.4.2.1).

2.6.5 Register 18_{16} –to- $1C_{16}$, Mode S Specific Services Capability Reports (§2.2.24.5)

No test procedure required.

2.6.5.1 Purpose and Definition (§2.2.24.5.1)

No direct test procedure required as format of each required bit in Registers 18_{16} – through- $1C_{16}$ are verified in subsequent tests.

2.6.5.2 Data Requirements (§2.2.24.5.2)

Introduction:

The purpose of this procedure is to verify the settings of the Mode S Specific Services Capability Reports as required in §2.2.24.5.2 when no capability has been established. The setting of appropriate bits in Registers 18_{16} –through- $1C_{16}$ as capability is established or changed is demonstrated or verified in subsequent sections.

2.6.5.2.1 Required Servicing of Register 18_{16} Associated with Register 10_{16} (§2.2.24.1 and 2.2.24.5.2.1)

Test Procedure:

Interrogate the transponder with the following GICB Extraction interrogation in order to extract the Register 18_{16} Mode S Specific Services Capability Report.

REGISTER 18_{16} MODE S SPECIFIC SERVICES CAPABILITY GICB EXTRACTION EXTENDED DATA SOURCE INTERROGATION SETUP									
1 ---- 5	6 ---- 8	9 --- 13	14-16	17 -- 20	21 -- 24	25	26	27—28	29 --- 32
				"SD"					
"UF" =	**"PC" =**	**"RR" =**	**"DI" =**	**"IIS" =**	**"RRS =**	**"X" =**	**"LOS" =**	**"XX" =**	**"TMS" =**
4	0	**17** (11 HEX)	**7**	0	**8**	0	0	0	0

Verify that the transponder replies with a "DF" = 20 reply with:

Bits **33** –through- **88** (bits **1** –through- **56** of the "MB" Field) set to ZERO (0) to indicate NO Capability has been established to service the BDS Codes designated in Register 18_{16}.

2.6.5.2.2 Required Servicing of Register 18_{16} Associated with Register 17_{16} (§2.2.24.5.2.2)

Appropriate procedures to validate the setting of Register 18_{16} bits associated with Register 17_{16} prior to establishing any capability in the transponder installation were demonstrated in (§2.6.5.2.1).

2.6.5.2.3 Required Servicing of Register 18_{16} Associated with Register 18_{16} (§2.2.24.5.2.3)

Appropriate procedures to validate the setting of Register 18_{16} bits associated with Register 18_{16} prior to establishing any capability in the transponder installation were demonstrated in (§2.6.5.2.1).

2.6.5.2.4 Required Servicing of Register 18_{16} Associated with Register 20_{16} (§2.2.24.5.2.4)

Appropriate procedures to validate the setting of Register 18_{16} bits associated with Register 20_{16} prior to establishing any capability in the transponder installation were demonstrated in (§2.6.5.2.1).

2.6.5.2.5 Required Servicing of Register 18_{16} Associated with Register 21_{16} (§2.2.24.5.2.5)

Appropriate procedures to validate the setting of Register 18_{16} bits associated with Register 21_{16} prior to establishing any capability in the transponder installation were demonstrated in (§2.6.5.2.1).

2.6.5.3 Mode S Specific Services Capability Report, Register 19_{16} (§2.2.24.1 and 2.2.24.5)

Interrogate the transponder with the following GICB Extraction interrogation in order to extract the Register 19_{16} Mode S Specific Services Capability Report.

REGISTER 19_{16} MODE S SPECIFIC SERVICES CAPABILITY GICB EXTRACTION EXTENDED DATA SOURCE INTERROGATION SETUP									
1 ---- 5	6 ---- 8	9 --- 13	14-16	17 -- 20	21 -- 24	25	26	27—28	29 --- 32
				"SD"					
"UF" =	**"PC" =**	**"RR" =**	**"DI" =**	**"IIS" =**	**"RRS =**	**"X" =**	**"LOS" =**	**"XX" =**	**"TMS" =**
4	0	**17** (11 HEX)	**7**	0	**9**	0	0	0	0

Verify that the transponder replies with a "DF" = 20 reply with:

Bits **33** –through- **88** (bits **1** –through- **56** of the "MB" field) set to ZERO (0) to indicate NO Capability has been established to service the BDS Codes designated in Register 19_{16}.

2.6.5.4 **Mode S Specific Services Capability Report, Register $1A_{16}$** (§2.2.24.1 and 2.2.24.5)

Interrogate the transponder with the following GICB Extraction interrogation in order to extract the Register $1A_{16}$ Mode S Specific Services Capability Report.

REGISTER $1A_{16}$ MODE S SPECIFIC SERVICES CAPABILITY GICB EXTRACTION EXTENDED DATA SOURCE INTERROGATION SETUP									
1 ---- 5	6 ---- 8	9 --- 13	14-16	17 -- 20	21 -- 24	25	26	27—28	29 --- 32
				"SD"					
"UF" =	**"PC" =**	**"RR" =**	**"DI" =**	**"IIS" =**	**"RRS =**	**"X" =**	**"LOS" =**	**"XX" =**	**"TMS" =**
4	0	**17** (11 HEX)	**7**	0	**A**	0	0	0	0

Verify that the transponder replies with a "DF" = 20 reply with:

Bits **33** –through- **88** (bits **1** –through- **56** of the "MB" field) set to ZERO (0) to indicate NO Capability has been established to service the BDS Codes designated in Register $1A_{16}$.

2.6.5.5 **Mode S Specific Services Capability Report, Register $1B_{16}$** (§2.2.24.1 and 2.2.24.5)

Interrogate the transponder with the following GICB Extraction interrogation in order to extract the Register $1B_{16}$ Mode S Specific Services Capability Report.

REGISTER $1B_{16}$, MODE S SPECIFIC SERVICES CAPABILITY GICB EXTRACT. EXTENDED DATA SOURCE INTERROGATION SETUP									
1 ---- 5	6 ---- 8	9 --- 13	14-16	17 -- 20	21 -- 24	25	26	27—28	29 --- 32
				"SD"					
"UF" =	**"PC" =**	**"RR" =**	**"DI" =**	**"IIS" =**	**"RRS =**	**"X" =**	**"LOS" =**	**"XX" =**	**"TMS" =**
4	0	**17** (11 HEX)	**7**	0	**B**	0	0	0	0

Verify that the transponder replies with a "DF" = 20 reply with:

Bits **33** –through- **88** (bits **1** –through- **56** of the "MB" field) set to ZERO (0) to indicate NO Capability has been established to service the BDS Codes designated in Register $1B_{16}$.

2.6.5.6 **Mode S Specific Services Capability Report, Register $1C_{16}$** (§2.2.24.1 and 2.2.24.5)

Interrogate the transponder with the following GICB Extraction interrogation in order to extract the Register $1C_{16}$ Mode S Specific Services Capability Report.

REGISTER $1C_{16}$ MODE S SPECIFIC SERVICES CAPABILITY GICB EXTRACTION EXTENDED DATA SOURCE INTERROGATION SETUP									
1 ---- 5	6 ---- 8	9 --- 13	14-16	17 -- 20	21 -- 24	25	26	27—28	29 --- 32
				"SD"					
"UF" =	**"PC" =**	**"RR" =**	**"DI" =**	**"IIS" =**	**"RRS =**	**"X" =**	**"LOS" =**	**"XX" =**	**"TMS" =**
4	0	**17** (11 HEX)	**7**	0	**C**	0	0	0	0

Verify that the transponder replies with a "DF" = 20 reply with:

Bits **33** –through- **88** (bits **1** –through- **56** of the "MB" field) set to ZERO (0) to indicate NO Capability has been established to service the BDS Codes designated in Register $1C_{16}$.

Note: *Up to this point, the ELS Test Procedures have been written sequentially so as to align with the sequence of the requirements given in §2.2.24. This was possible up to this point as neither Aircraft Identification nor Aircraft Registry data has been provided to the unit under test. Once data is being provided to the unit under test, the changing of the data drives changes into multiple registers at virtually the same time. This presents a problem in attempting to develop test procedures that sequentially track the requirements which have been stated on a register basis as opposed to a functional basis. Therefore, the remainder of the ELS Test Procedures are developed on a functional basis with traceability to the requirements in §2.2.24 indicated in the procedures as appropriate.*

2.6.6 **Baseline Aircraft Identification and Aircraft Registration Testing** (§2.2.24.6 and 2.2.24.7)

No test procedure required as such procedures are provided in the following subparagraphs.

2.6.6.1 **Part 1: Aircraft Identification and Aircraft Registration Startup** (§2.2.24.6 and 2.2.24.7)

Note 1: *This Part 1includes validation that back to back broadcasts are generated by the transponder. The first broadcast for the change in Aircraft Identification data in Register 20_{16} and the second broadcast for the change in Data Link Capability in Register 10_{16} caused by the change in Register 10_{16}. Subsequent Parts of section 2.6. do not need to validate both broadcasts.*

Note 2: *Review all subparagraphs of Part 1 prior to performing tests. This is necessary to establish the appropriate timing between changing data inputs and interrogations.*

a. **Data Initialization:** (§2.2.24.6.2.1, 2.2.24.6.3.a, and 2.2.24.7.2)

(1). Provide the transponder with Aircraft Identification Data as specified in the following table at a minimum rate of once per second for each character provided.

Aircraft Identification Input Data				
Character Number (See Note 1)	**Character**	**IA-5 Encoding (See Note 2)**	**DO-181D Encoding (See Note 3)**	**LSB Encoding (See Note 4)**
1	"U"	1010101	010101	1010101
2	"J"	1001010	001010	0101001
3	"U"	1010101	010101	1010101
4	"J"	1001010	001010	0101001
5	"U"	1010101	010101	1010101
6	"J"	1001010	001010	0101001
7	"U"	1010101	010101	1010101
8	"J"	1001010	001010	0101001
9	"X"	1011000	011000	0001101
10	"Y"	1011001	011001	1001101

Notes:

1. *Aircraft Identification only uses eight characters in the downlink "MB" field; however, some equipments have indicated that ten input characters may be desired in*

the future. Therefore, this table provides for up to ten input characters.

2. *IA-5 refers to International Alphabet No. 5 (IA-5) as provided in Table 8-2 of ICAO Annex 10, Volume III, Part 1, Amendment 71, last update. Encoding is shown above being MSB left justified (e.g., b7, b6, …….b2, b1.).*

3. *DO-181D encoding refers to DO-181D §2.2.19.1.13.f encoding which is equivalent to ICAO Annex 10, Volume IV, §3.1.2.9.1.2, Table 3-7. Encoding is shown above being MSB left justified (e.g., b6, b5, ….. b2, b1.).*

4. *LSB Encoding shows the IA-5 Encoding reversed with the LSB being Left Justified. This encoding is typical of serial input protocols which transmit data LSB first.*

(2). **As an Option:**

Provide the transponder with Aircraft Registration Data as specified in the following table at a minimum rate of once per second for each character provided.

Aircraft Registration Input Data				
Character Number	**Character**	**IA-5 Encoding (See Note 1)**	**DO-181D Encoding (See Note 2)**	**LSB Encoding (See Note 3)**
1	"J"	1001010	001010	0101001
2	"U"	1010101	010101	1010101
3	"J"	1001010	001010	0101001
4	"U"	1010101	010101	1010101
5	"J"	1001010	001010	0101001
6	"U"	1010101	010101	1010101
7	"J"	1001010	001010	0101001
8	"U"	1010101	010101	1010101
9	"J"	1001010	001010	0101001

Notes:

1. *IA-5 refers to International Alphabet No. 5 (IA-5) as provided in Table 8-2 of ICAO Annex 10, Volume III, Part 1, Amendment 71, last update. Encoding is shown above being MSB left justified (e.g., b7, b6, …….b2, b1.).*

2. *DO-181D encoding refers to DO-181D §2.2.19.1.13.f encoding which is equivalent to ICAO Annex 10, Volume IV, §3.1.2.9.1.2, Table 3-7. Encoding is shown above being MSB left justified (e.g., b6, b5, ….. b2, b1.).*

3. *LSB Encoding shows the IA-5 Encoding reversed with the LSB being Left Justified. This encoding is typical of serial input protocols which transmit data LSB first.*

b. **Comm-B Broadcast and Aircraft Identification Verification:** (§2.2.24.3.3, 2.2.24.6.2.1 and 2.2.24.6.5)

For up to 10.0 seconds after completing Part 1, Step a, interrogate the transponder with the following GICB Extraction interrogation in order to extract the Register 20_{16} - Aircraft Identification.

REGISTER 20_{16} AIRCRAFT IDENTIFICATION GICB EXTRACTION DATA SOURCE INTERROGATION SETUP					
1 ---- 5	6 ---- 8	9 --- 13	14-16	17 -- 20	21 ---------- 32
				"SD"	
"UF" =	**"PC" =**	**"RR" =**	**"DI" =**	**"IIS" =**	**"NOT ASSIGNED" =**
4	0	**18** (12 HEX)	**0**	0	0

Note 1: *The interrogation should initiate the "B" timer for 18 ±1.0 seconds since a Comm-B Broadcast is initiated when Aircraft Identification Data is changed.*

Within **FIVE** (5) seconds of starting the interrogations, verify that the transponder replies with a "DF" = 20 reply with:

Note 2: *The 5 seconds is based on the update rate specified for Register 20_{16}.*

(1). "DR" = 4 or 5 if TCAS Information **IS NOT** available

= 6 or 7 if TCAS Information **IS** available.

(2). And the "MB" field of the reply provides Aircraft Identification Data as follows:

Note 3: *"DR" = 4, 5, 6, or 7 indicates that Broadcast information is available.*

Part 1. b.(2). DF = 20, Register 20_{16} - Aircraft Identification "MB" Field									
Reply Bits:	33 --- 40	41 -- 46	47 -- 52	53 -- 58	59 -- 64	65 -- 70	71 --76	77 -- 82	83 -- 88
"MB" Bits:	1 --- 8	9 --- 14	15 -- 20	21 -- 26	27 -- 32	33 -- 38	39 -- 44	45 -- 50	51 -- 56
Field:	**BDS**	**Char. 1**	**Char. 2**	**Char. 3**	**Char. 4**	**Char. 5**	**Char. 6**	**Char. 7**	**Char. 8**
Data:	0010 0000	010101	001010	010101	001010	010101	001010	010101	001010
Character:		**"U"**	**"J"**	**"U"**	**"J"**	**"U"**	**"J"**	**"U"**	**"J"**

As soon as "DR" = 4, 5, 6, or 7 is observed, start a Test Timer in order to monitor the "B" timer.

Note 4: *At this time, the "B" timer should be running due to the annunciation of a broadcast due to a change in the contents of Register 20_{16}. The annunciation should persist for 18 +/- 1 second.*

c. **Comm-B Broadcast Extraction due to Aircraft Identification Change:** (§2.2.24.3.2.1, 2.2.24.3.2.4, 2.2.24.3.2.5, 2.2.24.3.3.b, 2.2.24.3.4 and 2.2.24.6.3)

As soon as the transponder has replied with the proper Register 20_{16} reply in Part 1, Step b, interrogate the transponder with the following Comm-B Broadcast Extraction interrogations in order to extract the Comm-B broadcast message which should be the Aircraft Identification contained in Register 20_{16}.

COMM-B BROADCAST EXTRACTION INTERROGATION SETUP									
1 ---- 5	6 ---- 8	9 --- 13	14-16	17 -- 20	21 -- 24	25	26	27—28	29 --- 32
				"SD"					
"UF" =	**"PC" =**	**"RR" =**	**"DI" =**	**"IIS" =**	**"RRS =**	**"X" =**	**"LOS" =**	**"XX" =**	**"TMS" =**
4	0	**16** (10 HEX)	**7**	0	**0**	0	0	0	0

Verify that the transponder replies with a "DF" = 20 reply with the "MB" field providing Aircraft Identification data as follows:

Part 1. c. DF = 20, Register 20_{16} - Aircraft Identification "MB" Field									
Reply Bits:	33 --- 40	41 -- 46	47 -- 52	53 -- 58	59 -- 64	65 -- 70	71 --76	77 -- 82	83 -- 88
"MB" Bits:	1 --- 8	9 --- 14	15 -- 20	21 -- 26	27 -- 32	33 -- 38	39 -- 44	45 -- 50	51 -- 56
Field:	**BDS**	**Char. 1**	**Char. 2**	**Char. 3**	**Char. 4**	**Char. 5**	**Char. 6**	**Char. 7**	**Char. 8**
Data:	0010 0000	010101	001010	010101	001010	010101	001010	010101	001010
Character:		**"U"**	**"J"**	**"U"**	**"J"**	**"U"**	**"J"**	**"U"**	**"J"**

d. **Comm-B Broadcast due to Data Link Capability Change Extraction:** (§2.2.24.3.2.1, 2.2.24.3.2.4, 2.2.24.3.2.5, 2.2.24.3.3.b, 2.2.24.3.4 and 2.2.24.6.3)

Continue to interrogate the transponder with the interrogation described in Part 1. c. (e.g., the last step) until the transponder replies with a "DF" = 20 reply with:

(1). "DR" = 4 or 5 if TCAS Information **IS NOT** available

= 6 or 7 if TCAS Information **IS** available.

(2). Bit **33** –through- **40** (bit 1 –through- **8** of the "MB" field) set to **10** HEX (**0001 0000**).

(2). Bit **65** ["AIS" subfield (bit **33** of the "MB" field)] set to ONE (1) to indicate Aircraft Identification capability.

(3). Bit **67** [Surveillance Identifier (SI) (bit **35** of the "MB" field)] set to ONE (1) to indicate that the transponder DOES Have "SI" Capability,

Note 1: *At this time, the "B" timer started in Part 1.b. should have expired and a second (e.g., new) "B" Timer started to annunciate a Datalink Capability Report Change for 18 +/- 1 seconds. Verification that the first "B" Timer has expired is demonstrated by the transponder replying with the contents of Register 10_{16} as opposed to Register 20_{16}.*

As soon as the reply specified above in this step is observed, start a new Test Timer in order to monitor the "B" timer.

Verify that the elapsed time of the Test Timer started in Part 1.b. is 18 +/- 1 second.

e. **Comm-B Broadcast due to Data Link Capability Change Termination:**

Continue to interrogate the transponder with the interrogation described in Part 1. c. (e.g., the last step) until the transponder replies with a "DF" = 20 reply with "DR" NOT EQUAL to 4, 5, 6, or 7.

Verify that the elapsed time of the Test Timer started in Part 1.d (e.g., the last step) is 18 +/- 1 second.

Note: *At this time, the "B" timer started in Part 1.d. as broadcast due to a change in Data Link Capability should have terminated.*

f. **Aircraft Registration Verification:** **(Optionl)** (§2.2.24.7.1, 2.2.24.7.2 and 2.2.24.7.3)

Note 1: *Servicing of Register 21_{16} is Optional.*

Stop providing data as specified in Part 1, Step a.(2) for a period of 20 seconds, then restart providing the same data to the transponder.

Within **15** seconds of providing such Aircraft Registration data interrogate the transponder with the following GICB Extraction interrogations in order to extract the Register 21_{16} - Aircraft Registration.

Note 2: *The 15 seconds is based on the update rate specified for Register 21_{16}*

REGISTER 21_{16} AIRCRAFT REGISTRATION GICB EXTRACTION EXTENDED DATA SOURCE INTERROGATION SETUP									
1 ---- 5	6 ---- 8	9 --- 13	14-16	17 -- 20	21 -- 24	25	26	27—28	29 --- 32
				"SD"					
"UF" =	**"PC" =**	**"RR" =**	**"DI" =**	**"IIS" =**	**"RRS =**	**"X" =**	**"LOS" =**	**"XX" =**	**"TMS" =**
4	0	**18** (12 HEX)	**7**	0	**1**	0	0	0	0

Verify that the transponder replies with a "DF" = 20 reply having the following "MB" field:

Part 1. f DF = 20, Register 21_{16} - Aircraft Registration "MB" Field											
Reply Bits:	33	34 -- 39	40 -- 45	46 -- 51	52 -- 57	58 -- 63	64 -- 69	70 --75	76	77 -- 82	83 -- 88
"MB" Bits:	1	2 -- 7	8 -- 13	14 -- 19	20 -- 25	26 -- 31	32 -- 37	38 -- 43	44	45 -- 50	51 – 56
Field:	**Status**	**Char. 1**	**Char. 2**	**Char. 3**	**Char. 4**	**Char. 5**	**Char. 6**	**Char. 7**	**Status**	**Char. 1**	**Char. 2**
Data:	1	001010	010101	001010	010101	001010	010101	001010	0	000000	000000
Character:		**"J"**	**"U"**	**"J"**	**"U"**	**"J"**	**"U"**	**"J"**			

g. **<u>Data Link Capability Report, Register 10_{16}:</u>** (§2.2.24.3.1, 2.2.24.3.2.1, 2.2.24.3.2.3, 2.2.24.3.2.4, 2.2.24.3.2.5, 2.2.24.3.2.6, 2.2.24.3.3.b, 2.2.24.4.4 and 2.2.24.6.4.1)

Discontinue providing the transponder with Aircraft Identification (Part 1, Step a.(1)) and Aircraft Registration data (Part 1, Step a.(2)). Then Repeat Part 1, Step a. and Step b.

As soon as the transponder has replied with the proper Register 20_{16} reply in Part 1. Step b in accordance with the previous paragraph, interrogate the transponder with the following GICB Extraction interrogations in order to extract the Register 10_{16} Data Link Capability Report.

REGISTER 10_{16} DATA LINK CAPABILITY GICB EXTRACTION DATA SOURCE INTERROGATION SETUP					
1 ---- 5	6 ---- 8	9 --- 13	14-16	17 -- 20	21 ---------- 32
				"SD"	
"UF" =	**"PC" =**	**"RR" =**	**"DI" =**	**"IIS" =**	**"NOT ASSIGNED" =**
4	0	**17** (11 HEX)	**0**	0	0

Within SIX (6) seconds of starting the interrogations, verify that the transponder replies with a "DF" = 20 reply with:

<u>Note:</u> *The SIX (6) seconds is based on the five second update rate specified for Register 17_{16} plus the one second update rate for Register 10_{16} to update Bit 68.*

(1). Bit 33 –through- 40 (bit 1 –through- 8 of the "MB" field) set to 10 HEX (0001 0000).

(2). Bit 65 ["AIS" subfield (bit 33 of the "MB" field)] set to ONE (1) to indicate Aircraft Identification capability,

(3). Bit **57** [Mode S Specific Services Capability (bit **25** of the "MB" field)] set to ZERO (0) to indicate NO Mode S Specific Services Capability,

<u>Note 1:</u> *Servicing of Registers 02_{16}, 03_{16}, 04_{16}, 10_{16}, 17_{16} to $1C_{16}$, 20_{16} and 30_{16} does not constitute Mode S Specific Services Capability.*

<u>Note 2:</u> *If Register 21_{16} is being serviced, then Bit 57 (bit 25 of the "MB" field) is set to ONE (1).*

(4). Bit **67** [Surveillance Identifier (SI) (bit **35** of the "MB" field)] set to ONE (1) to indicate that the transponder DOES Have "SI" Capability,

(5). Bit **68** [Common Usage GICB Capability Report (bit **36** of the "MB" field)] set to ONE (1) to indicate that there has been a change in the Common Usage GICB Capability Report, Register 17_{16}.

h. **Common Usage GICB Capability Report, Register 17_{16}:** (§2.2.24.4.2, 2.2.24.4.3, 2.2.24.6.4.2 and 2.2.24.7.4.1)

Interrogate the transponder with the following GICB Extraction interrogation in order to extract the Register 17_{16} Common Usage GICB Capability Report:

REGISTER 17_{16} COMMON USAGE GICB CAPABILITY GICB EXTRACTION EXTENDED DATA SOURCE INTERROGATION SETUP									
1 ---- 5	6 ---- 8	9 --- 13	14-16	17 -- 20	21 -- 24	25	26	27—28	29 --- 32
				"SD"					
"UF" =	**"PC" =**	**"RR" =**	**"DI" =**	**"IIS" =**	**"RRS =**	**"X" =**	**"LOS" =**	**"XX" =**	**"TMS" =**
4	0	**17** (11 HEX)	**7**	0	**7**	0	0	0	0

Within **FIVE** (5) seconds of starting the interrogations, verify that the transponder replies with a "DF" = 20 reply with:

Note: *The 5 seconds is based on the update rate specified for Register 17_{16}.*

(1). Bit **39** (**7** of the "MB" field) set to ONE (1) to indicate that Aircraft Identification Capability is established.

(2). Bit **40** (**8** of the "MB" field) set to ONE (1) to indicate that Aircraft Registration Capability is established.

Note: *If Register 21_{16} is not being serviced, then Bit 40 (bit 8 of the "MB" field) is set to ZERO (0).*

i. **Mode S Specific Services GICB Capability, Register 18_{16}:** (§2.2.24.5.2, 2.2.24.5.3.a and b, 2.2.24.6.4.3 and 2.2.24.7.4.2)

As soon as the transponder has replied with the proper Register 20_{16} reply in Part 1, Step b as required in Part 1, Step g, interrogate the transponder with the following GICB Extraction interrogation in order to extract the Register 18_{16} Mode S Specific Services GICB Capability:

REGISTER 18_{16} MODE S SPECIFIC SERVICES CAPABILITY GICB EXTRACTION EXTENDED DATA SOURCE INTERROGATION SETUP									
1 ---- 5	6 ---- 8	9 --- 13	14-16	17 -- 20	21 -- 24	25	26	27—28	29 --- 32
				"SD"					
"UF" =	**"PC" =**	**"RR" =**	**"DI" =**	**"IIS" =**	**"RRS =**	**"X" =**	**"LOS" =**	**"XX" =**	**"TMS" =**
4	0	**17** (11 HEX)	**7**	0	**8**	0	0	0	0

Within **FIVE** (5) seconds of starting the interrogations, verify that the transponder replies with a "DF" = 20 reply with:

Note: *The 5 seconds is based on the update rate specified for Register 18_{16}.*

(1). Bit **73** (**41** of the "MB" field) set to ONE (1) to indicate that Data Link Capability 10_{16} is established.

(2). Bit **57** (**25** of the "MB" field) set to ONE (1) to indicate that Aircraft

Identification Capability 20_{16} is established.

(3). Bit **56** (**24** of the "MB" field) set to ONE (1) to indicate that Aircraft Registration Capability 21_{16} is established.

(4). Bit **66** (**34** of the "MB" field) set to ONE (1) to indicate that Register 17_{16} Servicing Capability is established.

(5). Bit **65** (**33** of the "MB" field) set to ONE (1) to indicate that Register 18_{16} Servicing Capability is established.

2.6.6.2 Part 2: Aircraft Identification Data Termination

Note 1: *This Part 2 validates that character data in Register 20_{16} is set to zero when Aircraft Identification data is lost and not replaced by Aircraft Registration data if such data is available.*

Note 2: *Review all subparagraphs of Part 2 prior to performing tests. This is necessary to establish the appropriate timing between changing data inputs and interrogations.*

a. **Aircraft Identification Data Termination:** (§2.2.24.6.2.1 and 2.2.24.7.2)

Discontinue the provision of Aircraft Identification data to the transponder. Continue to provide Aircraft Registration data as required in Part 1.a. and restarted in Part 1.g.

b. **Comm-B Broadcast and Aircraft Identification Verification:** (§2.2.24.6.2.1 and 2.2.24.6.5)

For up to 10.0 seconds after completing Part 2.a, interrogate the transponder with the following GICB Extraction interrogation in order to extract the Register 20_{16} - Aircraft Identification.

REGISTER 20_{16} AIRCRAFT IDENTIFICATION GICB EXTRACTION DATA SOURCE INTERROGATION SETUP					
1 ---- 5	6 ---- 8	9 --- 13	14-16	17 -- 20	21 ---------- 32
				"SD"	
"UF" =	**"PC" =**	**"RR" =**	**"DI" =**	**"IIS" =**	**"NOT ASSIGNED" =**
4	0	**18** (12 HEX)	**0**	0	0

Note 1: *The interrogation should initiate the "B" timer for 18 ±1.0 seconds since a Comm-B Broadcast is initiated when Aircraft Identification Data is changed.*

Within **TEN** (10) seconds of completing Part 2.a, verify that the transponder replies with a "DF" = 20 reply with:

Note 2: *The 10 seconds is based on the twice the update rate specified for Register 20_{16}.*

(1). "DR" = 4 or 5 if TCAS Information **IS NOT** available

= 6 or 7 if TCAS Information **IS** available.

(2). And the "MB" field of the reply provides Aircraft Identification Data as follows:

Part 2. b.(2). DF = 20, Register 20_{16} - Aircraft Identification "MB" Field									
Reply Bits:	33 --- 40	41 -- 46	47 -- 52	53 -- 58	59 -- 64	65 -- 70	71 --76	77 -- 82	83 -- 88
"MB" Bits:	1 --- 8	9 --- 14	15 -- 20	21 -- 26	27 -- 32	33 -- 38	39 -- 44	45 -- 50	51 -- 56
Field:	**BDS**	**Char. 1**	**Char. 2**	**Char. 3**	**Char. 4**	**Char. 5**	**Char. 6**	**Char. 7**	**Char. 8**
Data:	0010 0000	000000	000000	000000	000000	000000	000000	000000	000000
Character:		**"NUL"**	**"NUL"**	**"NUL"**	**"NUL"**	**"NUL"**	**"NUL"**	**"NUL"**	**"NUL"**

c. **<u>Comm-B Broadcast Extraction:</u>** (§2.2.24.3.2.1, 2.2.24.3.2.4, 2.2.24.3.2.5, 2.2.24.3.3.a and b , 2.2.24.3.4 and 2.2.24.6.3)

As soon as the transponder has replied with the proper Register 20_{16} reply in Part 2, Step b, interrogate the transponder with the following Comm-B Extraction interrogations in order to extract the Comm-B broadcast message which should be the Data Link Capability Report contained in Register 10_{16}.

COMM-B BROADCAST EXTRACTION INTERROGATION SETUP									
1 ---- 5	6 ---- 8	9 --- 13	14-16	17 -- 20	21 -- 24	25	26	27—28	29 --- 32
				"SD"					
"UF" =	**"PC" =**	**"RR" =**	**"DI" =**	**"IIS" =**	**"RRS =**	**"X" =**	**"LOS" =**	**"XX" =**	**"TMS" =**
4	0	**16** (10 HEX)	**7**	0	**0**	0	0	0	0

Within **ONE** (1) second of starting the interrogations, verify that the transponder replies with a "DF" = 20 reply with:

<u>Note:</u> *The 1 second is based on the update rate specified for Register 10_{16}.*

(1). "DR" = 4 or 5 if TCAS Information **IS NOT** available

= 6 or 7 if TCAS Information **IS** available.

(2). Bit **33** –through- **40** (bit 1 –through- **8** of the "MB" field) set to 10 HEX (0001 0000).

(3). Bit **65** ["AIS" subfield (bit **33** of the "MB" field)] set to ZERO (0) to indicate loss of Aircraft Identification capability,

d. **<u>Common Usage GICB Capability Report, Register 17_{16}:</u>** (§2.2.24.4.1, 2.2.24.4.2, 2.2.24.4.3, 2.2.24.4.4, 2.2.24.7.1 and 2.2.24.7.2)

As soon as the transponder has replied with the proper Register 20_{16} reply in Part 2, Step b, interrogate the transponder with the following GICB Extraction interrogation in order to extract the Register 17_{16} Common Usage GICB Capability Report:

REGISTER 17_{16} COMMON USAGE GICB CAPABILITY GICB EXTRACTION EXTENDED DATA SOURCE INTERROGATION SETUP									
1 ---- 5	6 ---- 8	9 --- 13	14-16	17 -- 20	21 -- 24	25	26	27—28	29 --- 32
				"SD"					
"UF" =	**"PC" =**	**"RR" =**	**"DI" =**	**"IIS" =**	**"RRS =**	**"X" =**	**"LOS" =**	**"XX" =**	**"TMS" =**
4	0	**17** (11 HEX)	**7**	0	**7**	0	0	0	0

Within **FIVE** (5) seconds of starting the interrogations, verify that the transponder replies with a "DF" = 20 reply with:

Note: *The 5 seconds is based on the update rate specified for Register 17_{16}.*

(1). Bit **39** (**7** of the "MB" field) set to ZERO (0) to indicate that Aircraft Identification Capability has changed.

(2). Bit **40** (**8** of the "MB" field) set to ONE (1) to indicate that Aircraft Registration Capability is established.

Note: *Bit 40 will be set to ZERO (0) if Aircraft Registration data is not being provided as provision of such data is optional.*

e. **Mode S Specific Services GICB Capability, Register 18_{16}:** (§2.2.24.3.1, 2.2.24.3.2.1, 2.2.24.3.2.3, 2.2.24.3.2.4, 2.2.24.3.2.5, 2.2.24.3.2.6, 2.2.24.5.1, 2.2.24.5.2.3, 2.2.24.5.3 and 2.2.24.6.4.3)

As soon as the transponder has replied with the proper Register 20_{16} reply in Part 2, Step b, interrogate the transponder with the following GICB Extraction interrogation in order to extract the Register 18_{16} Mode S Specific Services GICB Capability:

REGISTER 18_{16} MODE S SPECIFIC SERVICES CAPABILITY GICB EXTRACTION EXTENDED DATA SOURCE INTERROGATION SETUP									
1 ---- 5	6 ---- 8	9 --- 13	14-16	17 -- 20	21 -- 24	25	26	27—28	29 --- 32
				"SD"					
"UF" =	**"PC" =**	**"RR" =**	**"DI" =**	**"IIS" =**	**"RRS =**	**"X" =**	**"LOS" =**	**"XX" =**	**"TMS" =**
4	0	**17** (11 HEX)	**7**	0	**8**	0	0	0	0

Within **FIVE** (5) seconds of starting the interrogations, verify that the transponder replies with a "DF" = 20 reply with:

Note: *The 5 seconds is based on the update rate specified for Register 18_{16}.*

(1). Bit **57** (**25** of the "MB" field) set to ONE (1) to indicate that Aircraft Identification Capability is established.

(2). Bit **56** (**24** of the "MB" field) set to ONE (1) to indicate that Aircraft Registration Capability is established.

Note: *Bit **56** will be set to ZERO (0) if Aircraft Registration data is not being provided as provision of such data is optional.*

(3). Bit **66** (**34** of the "MB" field) set to ONE (1) to indicate that Register 17_{16} Servicing Capability is established.

(4). Bit **65** (**33** of the "MB" field) set to ONE (1) to indicate that Register 18_{16} Servicing Capability is established.

2.6.6.3 PART 3: Power-On Restart (NO Aircraft Ident.)

Note 1: *This Part 3 verifies that Optional Aircraft Registration data (if provided) is used at power-on for Aircraft Identification if actual Aircraft Identification data is not provided.*

Note 2: *Review all subparagraphs of Part 3 prior to performing tests. This is necessary to establish the appropriate timing between changing data inputs and interrogations.*

a. **Power-On Restart:** (§2.2.24.6.2.1 and 2.2.24.7.2)

Remove power from the transponder for approximately 10 seconds.

Continue application of Aircraft Registration data to the transponder as defined in Part 1.a. Do not re-apply Aircraft Identification data to the transponder at this time.

Re-apply power to the transponder.

b. **Comm-B Broadcast and Aircraft Identification Verification:** (§2.2.24.3.3, 2.2.24.6.2.1 and 2.2.24.6.5)

For up to 10.0 seconds after completing Part 3.a, interrogate the transponder with the following GICB Extraction interrogation in order to extract the Register 20_{16} - Aircraft Identification (now Aircraft Registration) data.

REGISTER 20_{16} AIRCRAFT IDENTIFICATION GICB EXTRACTION DATA SOURCE INTERROGATION SETUP					
1 ---- 5	6 ---- 8	9 --- 13	14-16	17 -- 20	21 ---------- 32
				"SD"	
"UF" =	**"PC" =**	**"RR" =**	**"DI" =**	**"IIS" =**	**"NOT ASSIGNED" =**
4	0	**18** (12 HEX)	**0**	0	0

Note 1: *The interrogation should initiate the "B" timer for 18 ±1.0 seconds since a Comm-B Broadcast is initiated when Aircraft Identification Data is changed.*

Within **TEN** (10) seconds of completing Part 3.a, verify that the transponder replies with a "DF" = 20 reply with:

Note 2: *The 10 seconds is based on the twice the update rate specified for Register 20_{16}.*

(1). "DR" = 4 or 5 if TCAS Information **IS NOT** available

= 6 or 7 if TCAS Information **IS** available.

(2). And the"MB" field of the reply provides Aircraft Identification (now Aircraft Registration) Data as follows:

Part 3. b.(2). DF = 20, Register 20_{16} - Aircraft Identification (now Aircraft Registration) "MB" Field									
Reply Bits:	33 --- 40	41 -- 46	47 -- 52	53 -- 58	59 -- 64	65 -- 70	71 --76	77 -- 82	83 -- 88
"MB" Bits:	1 --- 8	9 --- 14	15 -- 20	21 -- 26	27 -- 32	33 -- 38	39 -- 44	45 -- 50	51 -- 56
Field:	**BDS**	**Char. 1**	**Char. 2**	**Char. 3**	**Char. 4**	**Char. 5**	**Char. 6**	**Char. 7**	**Char. 8**
Data:	0010 0000	001010	010101	001010	010101	001010	010101	001010	010101
Character:		**"J"**	**"U"**	**"J"**	**"U"**	**"J"**	**"U"**	**"J"**	**"U"**

c. **Comm-B Broadcast Extraction:** (§2.2.24.3.2.1, 2.2.24.3.2.4, 2.2.24.3.2.5, 2.2.24.3.3.b, 2.2.24.3.4 and 2.2.24.6.3)

Note 1: *This test does not repeat testing of the timing of the "B" Timer as was done in Part 1. Rather, it is intended only to demonstrate that the broadcast is generated and contains the proper information.*

As soon as the transponder has replied with the proper Register 20_{16} reply in Part 3, Step b, interrogate the transponder with the following Comm-B Extraction interrogations in order to extract the Comm-B broadcast message which should be the Data Link Capability Report contained in Register 10_{16}.

COMM-B BROADCAST EXTRACTION INTERROGATION SETUP									
1 ---- 5	6 ---- 8	9 --- 13	14-16	17 -- 20	21 -- 24	25	26	27—28	29 --- 32
				"SD"					
"UF" =	**"PC" =**	**"RR" =**	**"DI" =**	**"IIS" =**	**"RRS =**	**"X" =**	**"LOS" =**	**"XX" =**	**"TMS" =**
4	0	**16** (10 HEX)	**7**	0	**0**	0	0	0	0

Within **ONE** (1) second of starting the interrogations, verify that the transponder replies with a "DF" = 20 reply with:

Note 2: *The 1 second is based on the update rate specified for Register 10_{16}.*

(1). "DR" = 4 or 5 if TCAS Information **IS NOT** available

= 6 or 7 if TCAS Information **IS** available.

(2). Bit **33** –through- **40** (bit 1 –through- **8** of the "MB" field) set to 10 HEX (0001 0000).

(3). Bit **65** ["AIS" subfield (bit **33** of the "MB" field)] set to ONE (1) to indicate Aircraft Identification capability.

d. **Common Usage GICB Capability Report, Register 17_{16}:** (§2.2.24.4.2, 2.2.24.4.3, 2.2.24.6.4.2 and 2.2.24.7.4.1)

As soon as the transponder has replied with the proper Register 20_{16} reply in Part 3, Step b, interrogate the transponder with the following GICB Extraction interrogation in order to extract the Register 17_{16} Common Usage GICB Capability Report:

REGISTER 17_{16} COMMON USAGE GICB CAPABILITY GICB EXTRACTION EXTENDED DATA SOURCE INTERROGATION SETUP									
1 ---- 5	6 ---- 8	9 --- 13	14-16	17 -- 20	21 -- 24	25	26	27—28	29 --- 32
				"SD"					
"UF" =	**"PC" =**	**"RR" =**	**"DI" =**	**"IIS" =**	**"RRS =**	**"X" =**	**"LOS" =**	**"XX" =**	**"TMS" =**
4	0	**17** (11 HEX)	**7**	0	**7**	0	0	0	0

Within **FIVE** (5) seconds of starting the interrogations, verify that the transponder replies with a "DF" = 20 reply with:

Note: *The 5 seconds is based on the update rate specified for Register 17_{16}.*

(1). Bit **39** (**7** of the "MB" field) set to ONE (1) to indicate that Aircraft Identification Capability has changed.

(2). Bit **40** (**8** of the "MB" field) set to ONE (1) to indicate that Aircraft Registration Capability is established.

e. **Mode S Specific Services GICB Capability, Register 18_{16}:** (§2.2.24.5 2.2.24.6.4.3 and 2.2.24.7.4.2)

As soon as the transponder has replied with the proper Register 20_{16} reply in Part 3, Step b, interrogate the transponder with the following GICB Extraction interrogation in order to extract the Register 18_{16} Mode S Specific Services GICB Capability:

REGISTER 18_{16} MODE S SPECIFIC SERVICES CAPABILITY GICB EXTRACTION EXTENDED DATA SOURCE INTERROGATION SETUP									
1 ---- 5	6 ---- 8	9 --- 13	14-16	17 -- 20	21 -- 24	25	26	27—28	29 --- 32
				"SD"					
"UF" =	**"PC" =**	**"RR" =**	**"DI" =**	**"IIS" =**	**"RRS =**	**"X" =**	**"LOS" =**	**"XX" =**	**"TMS" =**
4	0	**17** (11 HEX)	**7**	0	**8**	0	0	0	0

Within **FIVE** (5) seconds of starting the interrogations, verify that the transponder replies with a "DF" = 20 reply with:

Note: *The 5 seconds is based on the update rate specified for Register 18_{16}.*

(1). Bit **57** (**25** of the **"MB"** field) set to "**1**" to indicate that Aircraft Identification Capability has been established during the power-on cycle.

(2). Bit **56** (**24** of the **"MB"** field) set to "**1**" to indicate that Aircraft Registration Capability is established.

(3). Bit **66** (**34** of the **"MB"** field) set to **"1"** to indicate that Register 17_{16} Servicing Capability is established.

(4). Bit **65** (**33** of the **"MB"** field) set to **"1"** to indicate that Register 18_{16} Servicing Capability is established.

2.6.6.4 PART 4: Re-Apply Aircraft Identification

No test procedure required.

Note 1: *This Part 4 verifies that Aircraft Identification data will replace Aircraft Registration data once such Aircraft Identification data is available.*

Note 2: *Review all subparagraphs of Part 4 prior to performing tests. This is necessary to establish the appropriate timing between changing data inputs and interrogations.*

a. **Aircraft Identification Restart:** (§2.2.24.6.2.1 and 2.2.24.7.2)

Continue application of Aircraft Registration data to the transponder as defined in Part 1.a. Re-apply Aircraft Identification data to the transponder as defined in Part 1.a.

b. **Comm-B Broadcast and Aircraft Identification Verification:** (§2.2.24.3.3, 2.2.24.6.2.1 and 2.2.24.6.5)

For up to **10.0** seconds after completing Part 4.a, interrogate the transponder with the following GICB Extraction interrogation in order to extract the Register 20_{16} - Aircraft Identification data.

REGISTER 20_{16} AIRCRAFT IDENTIFICATION GICB EXTRACTION DATA SOURCE INTERROGATION SETUP					
1 ---- 5	6 ---- 8	9 --- 13	14-16	17 -- 20	21 ---------- 32
				"SD"	
"UF" =	**"PC" =**	**"RR" =**	**"DI" =**	**"IIS" =**	**"NOT ASSIGNED" =**
4	0	**18** (12 HEX)	**0**	0	0

Within **TEN** (10) seconds of completing Part 4.a, verify that the transponder replies with a "DF" = 20 reply with:

Note: *The 10 seconds is based on the twice the update rate specified for Register 20_{16}.*

(1). "DR" = 4 or 5 if TCAS Information **IS NOT** available

= 6 or 7 if TCAS Information **IS** available.

(2). And the **"MB"** field of the reply provides Aircraft Identification Data as follows

Part 4. b.(2). DF = 20, Register 20_{16} - Aircraft Identification "MB" Field									
Reply Bits:	33 --- 40	41 -- 46	47 -- 52	53 -- 58	59 -- 64	65 -- 70	71 --76	77 -- 82	83 -- 88
"MB" Bits:	1 --- 8	9 --- 14	15 -- 20	21 -- 26	27 -- 32	33 -- 38	39 -- 44	45 -- 50	51 -- 56
Field:	**BDS**	**Char. 1**	**Char. 2**	**Char. 3**	**Char. 4**	**Char. 5**	**Char. 6**	**Char. 7**	**Char. 8**
Data:	0010 0000	010101	001010	010101	001010	010101	001010	010101	001010
Character:		**"U"**	**"J"**	**"U"**	**"J"**	**"U"**	**"J"**	**"U"**	**"J"**

c. **Comm-B Broadcast Extraction:** (§2.2.24.3.2.1, 2.2.24.3.2.4, 2.2.24.3.2.5, 2.2.24.3.3.b, 2.2.24.3.4 and 2.2.24.6.3)

Note: *This test does not repeat testing of the timing of the "B" Timer as was done in Part 1. Rather, it is intended only to demonstrate that the broadcast is generated and contains the proper information.*

Interrogate the transponder with the following Comm-B Extraction interrogation in order to extract the Comm-B broadcast message which should be the Aircraft Identification contained in Register 20_{16}.

COMM-B BROADCAST EXTRACTION INTERROGATION SETUP									
1 ---- 5	6 ---- 8	9 --- 13	14-16	17 -- 20	21 -- 24	25	26	27—28	29 --- 32
				"SD"					
"UF" =	**"PC" =**	**"RR" =**	**"DI" =**	**"IIS" =**	**"RRS =**	**"X" =**	**"LOS" =**	**"XX" =**	**"TMS" =**
4	0	**16** (10 HEX)	**7**	0	**0**	0	0	0	0

Verify that the transponder replies with a "**DF**" = **20** reply with:

(1). "DR" = 4 or 5 if TCAS Information **IS NOT** available

= 6 or 7 if TCAS Information **IS** available.

(2). And the **"MB"** field of the reply provides Aircraft Identification Data as follows

Part 4. c.(2). DF = 20, Register 20_{16} - Aircraft Identification - "MB" Field									
Reply Bits:	33 --- 40	41 -- 46	47 -- 52	53 -- 58	59 -- 64	65 -- 70	71 --76	77 -- 82	83 -- 88
"MB" Bits:	1 --- 8	9 --- 14	15 -- 20	21 -- 26	27 -- 32	33 -- 38	39 -- 44	45 -- 50	51 -- 56
Field:	**BDS**	**Char. 1**	**Char. 2**	**Char. 3**	**Char. 4**	**Char. 5**	**Char. 6**	**Char. 7**	**Char. 8**
Data:	0010 0000	010101	001010	010101	001010	010101	001010	010101	001010
Character:		**"U"**	**"J"**	**"U"**	**"J"**	**"U"**	**"J"**	**"U"**	**"J"**

d. **<u>Common Usage GICB Capability Report, Register 17_{16}:</u>** (§2.2.24.4.2, 2.2.24.4.3, 2.2.24.6.4.2 and 2.2.24.7.4.1)

Interrogate the transponder with the following GICB Extraction interrogation in order to extract the Register 17_{16} Common Usage GICB Capability Report:

REGISTER 17_{16} COMMON USAGE GICB CAPABILITY GICB EXTRACTION EXTENDED DATA SOURCE INTERROGATION SETUP									
1 ---- 5	6 ---- 8	9 --- 13	14-16	17 -- 20	21 -- 24	25	26	27—28	29 --- 32
				"SD"					
"UF" =	**"PC" =**	**"RR" =**	**"DI" =**	**"IIS" =**	**"RRS =**	**"X" =**	**"LOS" =**	**"XX" =**	**"TMS" =**
4	0	**17** (11 HEX)	**7**	0	**7**	0	0	0	0

Verify that the transponder replies with a "**DF**" = **20** reply with:

(1). Bit **39** (**7** of the **"MB"** field) set to "**1**" to indicate that Aircraft Identification Capability has changed.

(2). Bit **40** (**8** of the **"MB"** field) set to "**1**" to indicate that Aircraft Registration Capability is established.

e. **<u>Mode S Specific Services GICB Capability, Register 18_{16}:</u>** (§2.2.24.5 2.2.24.6.4.3 and 2.2.24.7.4.2)

Interrogate the transponder with the following GICB Extraction interrogation in order to extract the Register 18_{16} Mode S Specific Services GICB Capability:

REGISTER 18_{16} MODE S SPECIFIC SERVICES CAPABILITY GICB EXTRACTION EXTENDED DATA SOURCE INTERROGATION SETUP									
1 ---- 5	6 ---- 8	9 --- 13	14-16	17 -- 20	21 -- 24	25	26	27—28	29 --- 32
				"SD"					
"UF" =	**"PC" =**	**"RR" =**	**"DI" =**	**"IIS" =**	**"RRS =**	**"X" =**	**"LOS" =**	**"XX" =**	**"TMS" =**
4	0	**17** (11 HEX)	**7**	0	**8**	0	0	0	0

Verify that the transponder replies with a "**DF**" = **20** reply with:

(1). Bit **57** (**25** of the **"MB"** field) set to "**1**" to indicate that Aircraft Identification Capability has been established during the power-on cycle.

(2). Bit **56** (**24** of the **"MB"** field) set to "**1**" to indicate that Aircraft Registration Capability is established.

(3). Bit **66** (**34** of the **"MB"** field) set to **"1"** to indicate that Register 17_{16} Servicing Capability is established.

(4). Bit **65** (**33** of the **"MB"** field) set to **"1"** to indicate that Register 18_{16} Servicing Capability is established.

2.6.6.5 PART 5: Data Mix #1

Note: *Review all subparagraphs of Part 5 prior to performing tests. This is necessary to establish the appropriate timing between changing data inputs and interrogations.*

a. **Data Mix #1 Initialization:** (§2.2.24.6.2.1 and 2.2.24.7.2)

(1). Provide the transponder with Aircraft Identification Data as specified in the following table at a minimum rate of once per second for each character provided.

Aircraft Identification Input Data				
Character Number (See Note 1)	**Character**	**IA-5 Encoding (See Note 2)**	**DO-181D Encoding (See Note 3)**	**LSB Encoding (See Note 4)**
1	"6"	0110110	110110	0110110
2	"SP"	0100000	100000	0000010
3	"9"	0111001	111001	1001110
4	"SP"	0100000	100000	0000010
5	"6"	0110110	110110	0110110
6	"SP"	0100000	100000	0000010
7	"9"	0111001	111001	1001110
8	"SP"	0100000	100000	0000010
9	"X"	1011000	011000	0001101
10	"Y"	1011001	011001	1001101

Notes:

1. *Aircraft Identification only uses eight characters in the downlink "MB" field; however, some equipments have indicated that ten input characters may be desired in the future. Therefore, this table provides for up to ten input characters.*
2. *IA-5 refers to International Alphabet No. 5 (IA-5) as provided in Table 8-2 of ICAO Annex 10, Volume III, Part 1, Amendment 71, last update. Encoding is shown above being MSB left justified (e.g., b7, b6, ……b2, b1.).*
3. *DO-181D encoding refers to DO-181D §2.2.19.1.13.f encoding which is equivalent to ICAO Annex 10, Volume IV, §3.1.2.9.1.2, Table 3-7. Encoding is shown above being MSB left justified (e.g., b6, b5, …..b2, b1.).*
4. *LSB Encoding shows the IA-5 Encoding reversed with the LSB being Left Justified. This encoding is typical of serial input protocols which transmit data LSB first.*

(2). Provide the transponder with Aircraft Registration Data as specified in the following table at a minimum rate of once per second for each character provided.

Aircraft Registration Input Data				
Character Number	**Character**	**IA-5 Encoding (See Note 1)**	**DO-181D Encoding (See Note 2)**	**LSB Encoding (See Note 3)**
1	"W"	1010111	010111	1110101
2	"X"	1011000	011000	0001101
3	"SP"	0100000	100000	0000010
4	"Y"	1011001	011001	1001101
5	"Z"	1011010	011010	0101101
6	"SP"	0100000	100000	0000010
7	"4"	0110100	110100	0010110
8	"2"	0110010	110010	0100110
9	"SP"	0100000	100000	0000010

Notes:

1. *IA-5 refers to International Alphabet No. 5 (IA-5) as provided in Table 8-2 of ICAO Annex 10, Volume III, Part 1, Amendment 71, last update. Encoding is shown above being MSB left justified (e.g., b7, b6, …….b2, b1.).*
2. *DO-181D encoding refers to DO-181D §2.2.19.1.13.f encoding which is equivalent to ICAO Annex 10, Volume IV, §3.1.2.9.1.2, Table 3-7. Encoding is shown above being MSB left justified (e.g., b6, b5, …..b2, b1.).*
3. *LSB Encoding shows the IA-5 Encoding reversed with the LSB being Left Justified. This encoding is typical of serial input protocols which transmit data LSB first.*

b. **Aircraft Identification Verification:** (§2.2.24.6.1 and 2.2.24.6.2.1)

For up to **10.0** seconds after completing Part 5.a, interrogate the transponder with the following GICB Extraction interrogation in order to extract the Register 20_{16} - Aircraft Identification data.

REGISTER 20_{16} AIRCRAFT IDENTIFICATION GICB EXTRACTION DATA SOURCE INTERROGATION SETUP					
1 ---- 5	6 ---- 8	9 --- 13	14-16	17 -- 20	21 ---------- 32
				"SD"	
"UF" =	**"PC" =**	**"RR" =**	**"DI" =**	**"IIS" =**	**"NOT ASSIGNED" =**
4	0	**18** (12 HEX)	**0**	0	0

Within **TEN** (10) seconds of completing Part 5.a, verify that the transponder replies with a "DF" = 20 reply with:

Note: *The 10 seconds is based on the twice the update rate specified for Register 20_{16}.*

Part 5. b. DF = 20, Register 20_{16} - Aircraft Identification "MB" Field									
Reply Bits:	33 --- 40	41 -- 46	47 -- 52	53 -- 58	59 -- 64	65 -- 70	71 --76	77 -- 82	83 -- 88
"MB" Bits:	1 --- 8	9 --- 14	15 -- 20	21 -- 26	27 -- 32	33 -- 38	39 -- 44	45 -- 50	51 -- 56
Field:	**BDS**	**Char. 1**	**Char. 2**	**Char. 3**	**Char. 4**	**Char. 5**	**Char. 6**	**Char. 7**	**Char. 8**
Data:	0010 0000	110110	111001	110110	111001	011000	011001	100000	100000
Character:		**"6"**	**"9"**	**"6"**	**"9"**	**"X"**	**"Y"**	**"SP"**	**"SP"**

c. **Aircraft Registration Verification:** (§2.2.24.6.2.1, 2.2.24.71 and 2.2.24.7.2)

Within **30.0** seconds of completing Part 5.a, interrogate the transponder with the following GICB Extraction interrogation in order to extract the Register 21_{16} - Aircraft Registration.

REGISTER 21_{16} AIRCRAFT REGISTRATION GICB EXTRACTION EXTENDED DATA SOURCE INTERROGATION SETUP									
1 ---- 5	6 ---- 8	9 --- 13	14-16	17 -- 20	21 -- 24	25	26	27—28	29 --- 32
				"SD"					
"UF" =	**"PC" =**	**"RR" =**	**"DI" =**	**"IIS" =**	**"RRS =**	**"X" =**	**"LOS" =**	**"XX" =**	**"TMS" =**
4	0	**18** (12 HEX)	**7**	0	**1**	0	0	0	0

Verify that the transponder replies with a "**DF**" = **20** reply and that the **"MB"** field of the reply provides Aircraft Registration Data as follows:

Part 5. c. DF = 20, Register 21_{16} - Aircraft Registration "MB" Field											
Reply Bits:	33	34 -- 39	40 -- 45	46 -- 51	52 -- 57	58 -- 63	64 -- 69	70 --75	76	77 -- 82	83 -- 88
"MB" Bits:	1	2 -- 7	8 -- 13	14 -- 19	20 -- 25	26 -- 31	32 -- 37	38 -- 43	44	45 -- 50	51 – 56
Field:	**Status**	**Char. 1**	**Char. 2**	**Char. 3**	**Char. 4**	**Char. 5**	**Char. 6**	**Char. 7**	**Status**	**Char. 1**	**Char. 2**
Data:	1	010111	011000	011001	011010	110100	110010	100000	0	000000	000000
Character:		**"W"**	**"X"**	**"Y"**	**"Z"**	**"4"**	**"2"**	**"SP"**			

2.6.6.6 PART 6: Data Mix #2

Note: *Review all subparagraphs of Part 6 prior to performing tests. This is necessary to establish the appropriate timing between changing data inputs and interrogations.*

a. **Data Mix #2 Initialization:** (§2.2.24.6.2.1 and 2.2.24.7.2)

(1). Provide the transponder with Aircraft Identification Data as specified in the following table at a minimum rate of once per second for each character provided.

Aircraft Identification Input Data				
Character Number (See Note 1)	**Character**	**IA-5 Encoding (See Note 2)**	**DO-181D Encoding (See Note 3)**	**LSB Encoding (See Note 4)**
1	"SP"	0100000	100000	0000010
2	"SP"	0100000	100000	0000010
3	"SP"	0100000	100000	0000010
4	"SP"	0100000	100000	0000010
5	"D"	1000100	000100	0010001
6	"L"	1001100	001100	0011001
7	"SP"	0100000	100000	0000010
8	"4"	0110100	110100	0010110
9	"SP"	0100000	100000	0000010
10	"5"	0110101	110101	1010110

Notes:

1. *Aircraft Identification only uses eight characters in the downlink "MB" field; however, some equipments have indicated that ten input characters may be desired in the future. Therefore, this table provides for up to ten input characters.*
2. *IA-5 refers to International Alphabet No. 5 (IA-5) as provided in Table 8-2 of ICAO Annex 10, Volume III, Part 1, Amendment 71, last update. Encoding is shown above being MSB left justified (e.g., b7, b6, ……b2, b1.).*
3. *DO-181D encoding refers to DO-181D §2.2.19.1.13.f encoding which is equivalent to ICAO Annex 10, Volume IV, §3.1.2.9.1.2, Table 3-7. Encoding is shown above being MSB left justified (e.g., b6, b5, …..b2, b1.).*
4. *LSB Encoding shows the IA-5 Encoding reversed with the LSB being Left Justified. This encoding is typical of serial input protocols which transmit data LSB first.*

(2). Provide the transponder with Aircraft Registration Data as specified in the following table at a minimum rate of once per second for each character provided.

b. **Aircraft Identification Verification:** (§2.2.24.6.1 and 2.2.24.6.2.1)

Within **TEN (10)** seconds of completing Part 6.a, interrogate the transponder with the following GICB Extraction interrogation in order to extract the Register 20_{16} - Aircraft Identification data.

REGISTER 20_{16} AIRCRAFT IDENTIFICATION GICB EXTRACTION DATA SOURCE INTERROGATION SETUP					
1 ---- 5	6 ---- 8	9 --- 13	14-16	17 -- 20	21 ---------- 32
				"SD"	
"UF" =	**"PC" =**	**"RR" =**	**"DI" =**	**"IIS" =**	**"NOT ASSIGNED" =**
4	0	**18** (12 HEX)	**0**	0	0

Within **TEN** (10) seconds of completing Part 6.a, verify that the transponder replies with a **"DF" = 20** reply with:

Note: *The 10 seconds is based on the twice the update rate specified for Register 20_{16}.*

Part 6. b. DF = 20, Register 20_{16} - Aircraft Identification "MB" Field									
Reply Bits:	33 --- 40	41 -- 46	47 -- 52	53 -- 58	59 -- 64	65 -- 70	71 --76	77 -- 82	83 -- 88
"MB" Bits:	1 --- 8	9 --- 14	15 -- 20	21 -- 26	27 -- 32	33 -- 38	39 -- 44	45 -- 50	51 -- 56
Field:	**BDS**	**Char. 1**	**Char. 2**	**Char. 3**	**Char. 4**	**Char. 5**	**Char. 6**	**Char. 7**	**Char. 8**
Data:	0010 0000	000100	001100	110100	110101	100000	100000	100000	100000
Character:		**"D"**	**"L"**	**"4"**	**"5"**	**"SP"**	**"SP"**	**"SP"**	**"SP"**

c. **Aircraft Registration Verification:** (§2.2.24.6.2.1, 2.2.24.71 and 2.2.24.7.2)

Within **30.0** seconds of completing Part 6.a, interrogate the transponder with the following GICB Extraction interrogation in order to extract the Register 21_{16} - Aircraft Registration.

REGISTER 21_{16} AIRCRAFT REGISTRATION GICB EXTRACTION EXTENDED DATA SOURCE INTERROGATION SETUP									
1 ---- 5	6 ---- 8	9 --- 13	14-16	17 -- 20	21 -- 24	25	26	27—28	29 --- 32
				"SD"					
"UF" =	**"PC" =**	**"RR" =**	**"DI" =**	**"IIS" =**	**"RRS =**	**"X" =**	**"LOS" =**	**"XX" =**	**"TMS" =**
4	0	**18** (12 HEX)	**7**	0	**1**	0	0	0	0

Verify that the transponder replies with a "**DF**" = **20** reply and that the **"MB"** field of the reply provides Aircraft Registration Data as follows:

Part 6. c. DF = 20, Register 21_{16} - Aircraft Registration "MB" Field											
Reply Bits:	33	34 -- 39	40 -- 45	46 -- 51	52 -- 57	58 -- 63	64 -- 69	70 --75	76	77 -- 82	83 -- 88
"MB" Bits:	1	2 -- 7	8 -- 13	14 -- 19	20 -- 25	26 -- 31	32 -- 37	38 -- 43	44	45 -- 50	51 – 56
Field:	**Status**	**Char. 1**	**Char. 2**	**Char. 3**	**Char. 4**	**Char. 5**	**Char. 6**	**Char. 7**	**Status**	**Char. 1**	**Char. 2**
Data:	1	000100	001100	110100	110100	100000	100000	100000	0	000000	000000
Character:		**"D"**	**"L"**	**"4"**	**"4"**	**"SP"**	**"SP"**	**"SP"**			

2.6.6.7 PART 7: Data Mix 4 - No Data

Note: *Review all subparagraphs of Part 8 prior to performing tests. This is necessary to establish the appropriate timing between changing data inputs and interrogations.*

a. **Data Mix #4 Initialization:** (§2.2.24.6.2.1 and 2.2.24.7.2)

(1). Disable the capability to provide the transponder with Aircraft Identification Data.

(2). Disable the capability to provide the transponder with Aircraft Registration Data.

b. **Aircraft Identification Verification:** (§2.2.24.6.1, 2.2.24.6.2.1 and 2.2.24.6.3)

Within **TEN** (10) seconds of completing Part 7.a, interrogate the transponder with the following GICB Extraction interrogation in order to extract the Register 20_{16} - Aircraft Identification data.

REGISTER 20_{16} AIRCRAFT IDENTIFICATION GICB EXTRACTION DATA SOURCE INTERROGATION SETUP					
1 ---- 5	6 ---- 8	9 --- 13	14-16	17 -- 20	21 ---------- 32
				"SD"	
"UF" =	**"PC" =**	**"RR" =**	**"DI" =**	**"IIS" =**	**"NOT ASSIGNED" =**
4	0	**18** (12 HEX)	**0**	0	0

Verify that the transponder replies with a "**DF**" = **20** reply and that the **"MB"** field of the reply provides Aircraft Identification Data as follows:

Note: *The 10 seconds is based on the twice the update rate specified for Register 20_{16}.*

Part 6. b. DF = 20, Register 20_{16} - Aircraft Identification "MB" Field									
Reply Bits:	33 --- 40	41 -- 46	47 -- 52	53 -- 58	59 -- 64	65 -- 70	71 --76	77 -- 82	83 -- 88
"MB" Bits:	1 --- 8	9 --- 14	15 -- 20	21 -- 26	27 -- 32	33 -- 38	39 -- 44	45 -- 50	51 -- 56
Field:	**BDS**	**Char. 1**	**Char. 2**	**Char. 3**	**Char. 4**	**Char. 5**	**Char. 6**	**Char. 7**	**Char. 8**
Data:	0010 0000	000000	000000	000000	000000	000000	000000	000000	000000
Character:		**"NUL"**	**"NUL"**	**"NUL"**	**"NUL"**	**"NUL"**	**"NUL"**	**"NUL"**	**"NUL"**

c. **Aircraft Registration Verification:** (§2.2.24.6.2.1, 2.2.24.71, 2.2.24.7.2 and 2.2.24.7.3)

Within **30.0** seconds of completing Part 7.a, interrogate the transponder with the following GICB Extraction interrogation in order to extract the Register 21_{16} - Aircraft Registration.

Note: *The 30 seconds is based on the twice the update rate specified for Register 21_{16}*

REGISTER 21_{16} AIRCRAFT REGISTRATION GICB EXTRACTION EXTENDED DATA SOURCE INTERROGATION SETUP									
1 ---- 5	6 ---- 8	9 --- 13	14-16	17 -- 20	21 -- 24	25	26	27—28	29 --- 32
				"SD"					
"UF" =	**"PC" =**	**"RR" =**	**"DI" =**	**"IIS" =**	**"RRS =**	**"X" =**	**"LOS" =**	**"XX" =**	**"TMS" =**
4	0	**18** (12 HEX)	**7**	0	**1**	0	0	0	0

Verify that the transponder replies with a "**DF**" = **20** reply and that the **"MB"** field of the reply provides Aircraft Registration Data as follows:

Part 6. c. DF = 20, Register 21_{16} - Aircraft Registration "MB" Field											
Reply Bits:	33	34 -- 39	40 -- 45	46 -- 51	52 -- 57	58 -- 63	64 -- 69	70 --75	76	77 -- 82	83 -- 88
"MB" Bits:	1	2 -- 7	8 -- 13	14 -- 19	20 -- 25	26 -- 31	32 -- 37	38 -- 43	44	45 -- 50	51 – 56
Field:	**Status**	**Char. 1**	**Char. 2**	**Char. 3**	**Char. 4**	**Char. 5**	**Char. 6**	**Char. 7**	**Status**	**Char. 1**	**Char. 2**
Data:	1	000000	000000	000000	000000	000000	000000	000000	0	000000	000000
Character:		**"NUL"**	**"NUL"**	**"NUL"**	**"NUL"**	**"NUL"**	**"NUL"**	**"NUL"**			

d. **Common Usage GICB Capability Report, Register 17_{16}:** (§2.2.24.4.2, 2.2.24.4.3, 2.2.24.6.4.2 and 2.2.24.7.4.1)

Within **TEN** (10) seconds of completing Part 7.a, interrogate the transponder with the following GICB Extraction interrogation in order to extract the Register 17_{16} Common Usage GICB Capability Report:

REGISTER 17_{16} COMMON USAGE GICB CAPABILITY GICB EXTRACTION EXTENDED DATA SOURCE INTERROGATION SETUP									
1 ---- 5	6 ---- 8	9 --- 13	14-16	17 -- 20	21 -- 24	25	26	27—28	29 --- 32
				"SD"					
"UF" =	**"PC" =**	**"RR" =**	**"DI" =**	**"IIS" =**	**"RRS =**	**"X" =**	**"LOS" =**	**"XX" =**	**"TMS" =**
4	0	**17** (11 HEX)	**7**	0	**7**	0	0	0	0

Verify that the transponder replies with a "DF" = 20 reply with:

(1). Bit **39** (**7** of the "MB" field) set to ZERO (0) to indicate that Aircraft Identification Capability has been lost.

(2). Bit **40** (**8** of the "MB" field) set to ZERO (0) to indicate that Aircraft Registration Capability has been lost.

2.6.6.8 PART 8: Data Link Capability Report Update Interval (§2.2.24.3.3)

a. **Data Initialization:** (§2.2.24.6.2.1 and 2.2.24.6.3.a)

After completion of Part 7, re-apply Aircraft Identification Data as specified in Part 1.a.(1).

b. **Aircraft Identification Verification:** (§2.2.24.6.1 and 2.2.24.6.2.1)

Interrogate the transponder with the following GICB Extraction interrogation in order to extract the Register 20_{16} - Aircraft Identification data.

REGISTER 20_{16} AIRCRAFT IDENTIFICATION GICB EXTRACTION DATA SOURCE INTERROGATION SETUP					
1 ---- 5	6 ---- 8	9 --- 13	14-16	17 -- 20	21 ---------- 32
				"SD"	
"UF" =	**"PC" =**	**"RR" =**	**"DI" =**	**"IIS" =**	**"NOT ASSIGNED" =**
4	0	**18** (12 HEX)	**0**	0	0

Verify that the transponder replies with the following "DF" = 20 reply:

Part 8. b. DF = 20, Register 20_{16} - Aircraft Identification "MB" Field									
Reply Bits:	33 --- 40	41 -- 46	47 -- 52	53 -- 58	59 -- 64	65 -- 70	71 --76	77 -- 82	83 -- 88
"MB" Bits:	1 --- 8	9 --- 14	15 -- 20	21 -- 26	27 -- 32	33 -- 38	39 -- 44	45 -- 50	51 -- 56
Field:	**BDS**	**Char. 1**	**Char. 2**	**Char. 3**	**Char. 4**	**Char. 5**	**Char. 6**	**Char. 7**	**Char. 8**
Data:	0010 0000	010101	001010	010101	001010	010101	001010	010101	001010
Character:		**"U"**	**"J"**	**"U"**	**"J"**	**"U"**	**"J"**	**"U"**	**"J"**

c. **Data Link Capability Report, Register 10_{16}:** (§2.2.24.3.1, 2.2.24.3.2.1, 2.2.24.3.2.3, 2.2.24.3.2.4, 2.2.24.3.2.5, 2.2.24.3.2.6, 2.2.24.3.3.a and b, 2.2.24.4.4 and 2.2.24.6.4.1)

As soon as the transponder replies with the reply required in Part 8.b., interrogate the transponder with the following interrogation:

REGISTER 10_{16} DATA LINK CAPABILITY GICB EXTRACTION DATA SOURCE INTERROGATION SETUP					
1 ---- 5	6 ---- 8	9 --- 13	14-16	17 -- 20	21 ---------- 32
				"SD"	
"UF" =	**"PC" =**	**"RR" =**	**"DI" =**	**"IIS" =**	**"NOT ASSIGNED" =**
4	0	**17** (11 HEX)	**0**	0	0

Within **ONE** (1) second of initiating the above interrogation, verify that the transponder replies with a "DF" = 20 reply with:

(1). Bit **33** –through- **40** (bit **1** –through- **8** of the "MB" field) set to 10 HEX (**0001 0000**).

(2). Bit **65** ["AIS" subfield (bit **33** of the "MB" field)] set to ONE (1) to indicate Aircraft Identification capability,

(3). Bit **57** [Mode S Specific Services Capability (bit **25** of the "MB" field)] set to ZERO (0) to indicate NO Mode S Specific Services Capability,

Note: *Servicing of Registers 02_{16}, 03_{16}, 04_{16}, 10_{16}, 17_{16} to $1C_{16}$, 20_{16} and 30_{16} does not constitute Mode S Specific Services Capability.*

(4). Bit **67** [Surveillance Identifier (SI) (bit **35** of the "MB" field)] set to ONE (1) to indicate that the transponder DOES Have "SI" Capability,

d. **Aircraft Identification Termination:** (§2.2.24.6.2.1, and 2.2.24.6.3.a)

Terminate provisioning of the Aircraft Identification data started in Part 8.a.

e. **Aircraft Identification Verification:** (§2.2.24.6.1 and 2.2.24.6.2.1)

Interrogate the transponder with the following GICB Extraction interrogation in order to extract the Register 20_{16} - Aircraft Identification data.

REGISTER 20_{16} AIRCRAFT IDENTIFICATION GICB EXTRACTION DATA SOURCE INTERROGATION SETUP					
1 ---- 5	6 ---- 8	9 --- 13	14-16	17 -- 20	21 ---------- 32
				"SD"	
"UF" =	**"PC" =**	**"RR" =**	**"DI" =**	**"IIS" =**	**"NOT ASSIGNED" =**
4	0	**18** (12 HEX)	**0**	0	0

Verify that the transponder replies with the following "DF" = 20 reply:

Part 8. e. DF = 20, Register 20_{16} - Aircraft Identification "MB" Field									
Reply Bits:	33 --- 40	41 -- 46	47 -- 52	53 -- 58	59 -- 64	65 -- 70	71 --76	77 -- 82	83 -- 88
"MB" Bits:	1 --- 8	9 --- 14	15 -- 20	21 -- 26	27 -- 32	33 -- 38	39 -- 44	45 -- 50	51 -- 56
Field:	**BDS**	**Char. 1**	**Char. 2**	**Char. 3**	**Char. 4**	**Char. 5**	**Char. 6**	**Char. 7**	**Char. 8**
Data:	0010 0000	000000	000000	000000	000000	000000	000000	000000	000000
Character:		**NULL**	**NULL**	**NULL**	**NULL**	**NULL**	**NULL**	**NULL**	**NULL**

f. **Data Link Capability Report, Register 10_{16}:** (§2.2.24.3.1, 2.2.24.3.2.1, 2.2.24.3.2.3, 2.2.24.3.2.4, 2.2.24.3.2.5, 2.2.24.3.2.6, 2.2.24.3.3.c, 2.2.24.4.4 and 2.2.24.6.4.1)

As soon as the transponder replies with the reply required in Part 8.b., interrogate the transponder with the following interrogation:

REGISTER 10_{16} DATA LINK CAPABILITY GICB EXTRACTION DATA SOURCE INTERROGATION SETUP					
1 ---- 5	6 ---- 8	9 --- 13	14-16	17 -- 20	21 ---------- 32
				"SD"	
"UF" =	**"PC" =**	**"RR" =**	**"DI" =**	**"IIS" =**	**"NOT ASSIGNED" =**
4	0	**17** (11 HEX)	**0**	0	0

Within **EIGHT** (8) seconds of initiating the above interrogation, verify that the transponder replies with a "DF" = 20 reply with:

(1). Bit **33** –through- **40** (bit **1** –through- **8** of the "MB" field) set to 10 HEX (**0001 0000**).

(2). Bit **65** ["AIS" subfield (bit **33** of the "MB" field)] set to ZERO (0) to indicate Aircraft Identification capability,

(3). Bit **57** [Mode S Specific Services Capability (bit **25** of the "MB" field)] set to ZERO (0) to indicate NO Mode S Specific Services Capability,

Note: *Servicing of Registers 02_{16}, 03_{16}, 04_{16}, 10_{16}, 17_{16} to $1C_{16}$, 20_{16} and 30_{16} does not constitute Mode S Specific Services Capability.*

(4). Bit **67** [Surveillance Identifier (SI) (bit **35** of the "MB" field)] set to ONE (1) to indicate that the transponder DOES Have "SI" Capability,

2.6.6.9 PART 9: Multiple Data Sources (§2.2.24)

If Multiple Data Sources of Register 20_{16} and/or Register 21_{16} are provided to the Unit-Under-Test (UUT), then **REPEAT** all applicable sections of Part **5** and **6** for each additional data source that was not tested while performing Parts **1** –through- **7**above.

2.7 Test Procedures for Enhanced Surveillance (EHS) Compliant Transponder (§2.2.25)

No test procedure required as §2.2.25 is introductory material for EHS.

2.7.1 Register 10_{16} – Data Link Capability Report (§2.2.25.1)

No test procedure required.

2.7.1.1 Purpose and Definition (§2.2.25.1.1)

No direct test procedure required as format of each required bit in Register 10_{16} is verified in subsequent tests.

2.7.1.2 Data Requirements (§2.2.25.1.2)

Introduction:

The purpose of this procedure is to verify the setting of the Data Link Capability Report as required in §2.2.25.1.2 when no capability has been established. The setting of appropriate bits in Register 10_{16} as capability is established or changed is demonstrated or verified in subsequent sections.

Test Procedure:

Note: *The primary intent of Part 1 is to validate appropriate capability declaration of No Capability prior to providing data to Register 40_{16}, 50_{16}, or 60_{16}.*

Ensure that **NO** Aircraft Identification or Aircraft Registration data is being provided to the transponder.

Ensure that the TCAS / Transponder interface is **NOT ACTIVE**. If the interface is active, TCAS will provide data to set the Data Link Capability and thereby compromise the results of the following tests. Likewise, TCAS could attempt to set the Resolution Advisory Report and thereby compromise the results of the following tests.

Ensure that no other data is being provided to the transponder that could result in the loading of BDS registers internal to the transponder.

Disable the Extended Squitter and Mode-S Specific Services ("MSSS") functions prior to starting the following procedures in order to keep from setting various BDS registers during the following tests.

2.7.1.2.1 Bit 1 –through- 8, BDS Code (§2.2.25.1.2.1)

Test Procedure:

Interrogate the transponder with the following GICB Extraction interrogation in order to extract the Register 10_{16} Data Link Capability Report.

REGISTER 10_{16} DATA LINK CAPABILITY GICB EXTRACTION DATA SOURCE INTERROGATION SETUP					
1 ---- 5	6 ---- 8	9 --- 13	14-16	17 -- 20	21 ---------- 32
				"SD"	
"UF" =	**"PC"** =	**"RR"** =	**"DI"** =	**"IIS"** =	**"NOT ASSIGNED"** =
4	0	**17** (11 HEX)	**0**	0	0

Verify that the transponder replies with a "DF" = 20 reply with bit **33** –through- **40** ("BDS" subfield (bit **1** –through- **8** of the "MB" field)] set to 10 HEX (0001 0000 binary).

2.7.1.2.2 Bit 17 –through- 23, Declaration of Mode-S Subnetwork Number (§2.2.25.1.2.2)

Test Procedure:

Continue to interrogate the transponder as required in §2.7.1.2.1.

Verify that the transponder replies with a "DF" = 20 reply with bit **49** – through- **55** [("Mode S Subnetwork Version Number" subfield (bit **17** –through- **23** of the "MB" field)] encoded with a value of **"3"** or more.

2.7.1.2.3 Bit 25, Declaration of No Mode S Specific Services Capability (§2.2.25.1.2.3)

Test Procedure:

Continue to interrogate the transponder as required in §2.7.1.2.1.

Verify that the transponder replies with a "DF" = 20 reply with bit **57** [Mode S Specific Services Capability (bit **25** of the "MB" field)] set to ZERO (0) to indicate NO Mode S Specific Services Capability.

Note: *Servicing of Registers 02_{16}, 03_{16}, 04_{16}, 10_{16}, 17_{16} to $1C_{16}$, 20_{16} and 30_{16} does not constitute Mode S Specific Services Capability.*

2.7.1.2.4 Bit 35, Surveillance Identifier Code (SI) (§2.2.25.1.2.4)

Test Procedure:

Continue to interrogate the transponder as required in §2.7.1.2.1.

Verify that the transponder replies with a "DF" = 20 reply with bit **67** [Surveillance Identifier (SI) (bit **35** of the "MB" field)] set to ONE (1) to indicate that the transponder DOES Have "SI" Capability.

2.7.1.2.5 Bit 36, Common Usage GICB Capability Report (§2.2.25.1.2.5)

Test Procedure:

Continue to interrogate the transponder as required in §2.7.1.2.1.

Verify that the transponder replies with a "DF" = 20 reply with bit **68** [Common Usage GICB Capability Report (bit **36** of the "MB" field)] set to ZERO (0) to indicate that there has been no change in the Common Usage GICB Capability Report, Register 17_{16}.

2.7.1.3 Minimum Update Interval of Register 10_{16} (§2.2.25.1.3)

No direct test procedure is required at this time as EHS data has yet to be provided to the transponder. Appropriate update checks are made in subsequent sections as data is provided.

2.7.1.4 Change Reporting (§2.2.25.1.4)

No direct test procedure is required at this time as EHS data has yet to be provided to the transponder. Appropriate change reporting checks are made in subsequent sections as data is provided.

2.7.2 Register 17_{16}---Common Usage GICB Capability Report (§2.2.25.2)

No test procedure required.

2.7.2.1 Purpose and Definition (§2.2.25.2.1)

No direct test procedure required as format of each required bit in Register 17_{16} is verified in subsequent tests.

2.7.2.2 Enhanced Surveillance (EHS) Servicing Requirements (§2.2.25.2.2)

Introduction:

The purpose of this procedure is to verify the setting of the Common Usage GICB Capability Report as required in §2.2.25.2.2 when no capability has been established. The setting of appropriate bits in Register 17_{16} as capability is established or changed is demonstrated or verified in subsequent sections.

Test Procedure:

Ensure that the conditions established in §2.7.1.2 are retained.

Interrogate the transponder with the following GICB Extraction interrogation in order to extract the Register 17_{16} Common Usage GICB Capability Report.

REGISTER 17_{16} COMMON USAGE GICB CAPABILITY GICB EXTRACTION EXTENDED DATA SOURCE INTERROGATION SETUP									
1 ---- 5	6 ---- 8	9 --- 13	14-16	17 -- 20	21 -- 24	25	26	27—28	29 --- 32
				"SD"					
"UF" =	**"PC" =**	**"RR" =**	**"DI" =**	**"IIS" =**	**"RRS =**	**"X" =**	**"LOS" =**	**"XX" =**	**"TMS" =**
4	0	**17** (11 HEX)	**7**	0	**7**	0	0	0	0

Verify that the transponder replies with a "DF" = 20 reply with:

a. Bits **33** –through- **60** (bits **1** –through- **28** of the "MB" field) set to ZERO (0) to indicate NO Capability or capability changes in the Common Usage GICB Capability Report, Register 17_{16}.

b. Bits **61** –through- **88** (bits **29** –through- **56** of the "MB" field) set to ZERO (0) since these bits are Reserved or "Don't Care".

2.7.2.2.1 Required Servicing of Register 17_{16} Associated with Register 20_{16} (§2.2.25.2.2.1)

Appropriate procedures to validate the initial state of Register 17_{16} in regards to Register 20_{16} were previously provided in section 2.6.4.2.1 and are checked again in section 2.7.2.2.

2.7.2.2.2 Required Servicing of Register 17_{16} Associated with Optional Register 21_{16} (§2.2.25.2.2.2)

Appropriate procedures to validate the initial state of Register 17_{16} in regards to Register 20_{16} were previously provided in section 2.6.4.2.1 and are checked again in section 2.7.2.2.

2.7.2.2.3 Required Servicing of Register 17_{16} Associated with Register 40_{16} (§2.2.25.2.2.3)

Appropriate procedures to validate the initial state of Register 17_{16} in regards to Register 40_{16} were previously provided in section 2.7.2.2 for conditions where no data has been provided for Register 40_{16}. Verification of the settings of Register 17_{16} in regards to Register 40_{16} will be verified in subsequent sections as data is provided for Register 40_{16}.

2.7.2.2.4 Required Servicing of Register 17_{16} Associated with Register 50_{16} (§2.2.25.2.2.4)

Appropriate procedures to validate the initial state of Register 17_{16} in regards to Register 50_{16} were previously provided in section 2.7.2.2 for conditions where no data has been provided for Register 50_{16}. Verification of the settings of Register 17_{16} in regards to Register 50_{16} will be verified in subsequent sections as data is provided for Register 50_{16}.

2.7.2.2.5 Required Servicing of Register 17_{16} Associated with Optional Register $5F_{16}$ (§2.2.25.2.2.5)

Appropriate procedures to validate the initial state of Register 17_{16} in regards to Optional Register $5F_{16}$ were previously provided in section 2.7.2.2 for conditions where no data has been provided for Register $5F_{16}$. Verification of the settings of Register 17_{16} in regards to Optional Register $5F_{16}$ will be verified in subsequent sections as data is provided for Register $5F_{16}$.

2.7.2.2.6 Required Servicing of Register 17_{16} Associated with Register 60_{16} (§2.2.25.2.2.6)

Appropriate procedures to validate the initial state of Register 17_{16} in regards to Register 60_{16} were previously provided in section 2.7.2.2 for conditions where no data has been provided for Register 60_{16}. Verification of the settings of Register 17_{16} in regards to Register 60_{16} will be verified in subsequent sections as data is provided for Register 60_{16}.

2.7.2.2.7 Minimum Update Interval of Register 17_{16} (§2.2.25.2.2.7)

No direct test procedure is required at this time as EHS data has yet to be provided to the transponder. Appropriate update checks are made in subsequent sections as data is provided.

2.7.2.3 Change Reporting (§2.2.25.2.2.7)

No direct test procedure is required at this time as EHS data has yet to be provided to the transponder. Appropriate change reporting checks are made in subsequent sections as data is provided.

2.7.3 Register 18_{16} –to- $1C_{16}$, Mode S Specific Services Capability Reports (§2.2.25.3)

No test procedure required.

2.7.3.1 Purpose and Definition (§2.2.25.5.1)

No direct test procedure required as format of each required bit in Registers 18_{16} –through- $1C_{16}$ are verified in subsequent tests.

2.7.3.2 Enhanced Surveillance Capability Requirements (§2.2.25.3.2)

No test procedure required.

2.7.3.2.1 Required Servicing of Register 18_{16} Associated with Register 10_{16} (§2.2.25.3.2.1 –through- 2.2.25.3.2.6)

Test Procedure:

Interrogate the transponder with the following GICB Extraction interrogation in order to extract the Register 18_{16} Mode S Specific Services Capability Report.

REGISTER 18_{16} MODE S SPECIFIC SERVICES CAPABILITY GICB EXTRACTION EXTENDED DATA SOURCE INTERROGATION SETUP									
1 ---- 5	6 ---- 8	9 --- 13	14-16	17 -- 20	21 -- 24	25	26	27—28	29 --- 32
				"SD"					
"UF" =	**"PC" =**	**"RR" =**	**"DI" =**	**"IIS" =**	**"RRS =**	**"X" =**	**"LOS" =**	**"XX" =**	**"TMS" =**
4	0	**17** (11 HEX)	**7**	0	**8**	0	0	0	0

Verify that the transponder replies with a "DF" = 20 reply with:

Bits **33** –through- **88** (bits **1** –through- **56** of the "MB" Field) set to ZERO (0) to indicate NO Capability has been established to service the BDS Codes designated in Register 18_{16}.

2.7.3.2.2 Required Servicing of Register 18_{16} Associated with Register 17_{16} (§2.2.25.3.2.2)

Appropriate procedures to validate the initial state of Register 18_{16} in regards to Register 17_{16} were previously provided in section 2.7.3.2.1 for conditions where no data has been provided for Register 17_{16}. Verification of the settings of Register 18_{16} in regards to Register 17_{16} will be verified in subsequent sections as data is provided for Register 17_{16}.

2.7.3.2.3 Required Servicing of Register 18_{16} Associated with Register 18_{16} (§2.2.25.3.2.3)

Appropriate procedures to validate the initial state of Register 18_{16} in regards to Register 18_{16} were previously provided in section 2.7.3.2.1 for conditions where no data has been provided for Register 18_{16}. Verification of the settings of Register 18_{16} in regards to Register 18_{16} will be verified in subsequent sections as data is provided for Register 18_{16}.

2.7.3.2.4 Required Servicing of Register 18_{16} Associated with Register 19_{16} (§2.2.25.3.2.4)

Appropriate procedures to validate the initial state of Register 18_{16} in regards to Register 19_{16} were previously provided in section 2.7.3.2.1 for conditions where no data has been provided for Register 19_{16}. Verification of the settings of Register 18_{16} in regards to Register 19_{16} will be verified in subsequent sections as data is provided for Register 19_{16}.

2.7.3.2.5 Required Servicing of Register 18_{16} Associated with Register 20_{16} (§2.2.25.3.2.5)

Appropriate procedures to validate the initial state of Register 18_{16} in regards to Register 20_{16} were previously provided in section 2.7.3.2.1 for conditions where no data has been provided for Register 20_{16}. Verification of the settings of Register 18_{16} in regards to Register 20_{16} will be verified in subsequent sections as data is provided for Register 20_{16}. Likewise, settings of Register 18_{16} in regards to Register 20_{16} were previously verified during ELS testing in section 2.6.

2.7.3.2.6 Required Servicing of Register 18_{16} Associated with Optional Register 21_{16} (§2.2.25.3.2.6)

Appropriate procedures to validate the initial state of Register 18_{16} in regards to Optional Register 21_{16} were previously provided in section 2.7.3.2.1 for conditions where no data has been provided for Register 21_{16}. Verification of the settings of Register 18_{16} in regards to Optional Register 21_{16} will be verified in subsequent sections as data is provided for Register 21_{16}. Likewise, settings of Register 18_{16} in regards to Optional Register 21_{16} were previously verified during ELS testing in section 2.6.

2.7.3.2.7 Required Servicing of Register 19_{16} Associated with Register 40_{16} (§2.2.25.3.2.7)

Interrogate the transponder with the following GICB Extraction interrogation in order to extract the Register 19_{16} Mode S Specific Services Capability Report.

REGISTER 19_{16} MODE S SPECIFIC SERVICES CAPABILITY GICB EXTRACTION EXTENDED DATA SOURCE INTERROGATION SETUP									
1 ---- 5	6 ---- 8	9 --- 13	14-16	17 -- 20	21 -- 24	25	26	27—28	29 --- 32
				"SD"					
"UF" =	**"PC" =**	**"RR" =**	**"DI" =**	**"IIS" =**	**"RRS =**	**"X" =**	**"LOS" =**	**"XX" =**	**"TMS" =**
4	0	**17** (11 HEX)	**7**	0	**9**	0	0	0	0

Verify that the transponder replies with a "DF" = 20 reply with:

Bits **33** –through- **88** (bits **1** –through- **56** of the "MB" field) set to ZERO (0) to indicate NO Capability has been established to service the BDS Codes designated in Register 19_{16}.

2.7.3.2.8 Required Servicing of Register 19_{16} Associated with Register 50_{16} (§2.2.25.3.2.8)

Appropriate procedures to validate the initial state of Register 19_{16} in regards to Register 50_{16} were previously provided in section 2.7.3.2.7 for conditions where no data has been provided for Register 50_{16}. Verification of the settings of Register 19_{16} in regards to Register 50_{16} will be verified in subsequent sections as data is provided for Register 50_{16}.

2.7.3.2.9 Required Servicing of Register 19_{16} Associated with Optional Register $5F_{16}$ (§2.2.25.3.2.9)

Appropriate procedures to validate the initial state of Register 19_{16} in regards to Optional Register $5F_{16}$ were previously provided in section 2.7.3.2.7 for conditions where no data has been provided for Optional Register $5F_{16}$. Verification of the settings of Register 19_{16} in regards to Optional Register $5F_{16}$ will be verified in subsequent sections as data is provided for Optional Register $5F_{16}$.

2.7.3.2.10 Required Servicing of Register 19_{16} Associated with Register 60_{16} (§2.2.25.3.2.10)

Appropriate procedures to validate the initial state of Register 19_{16} in regards to Register 60_{16} were previously provided in section 2.7.3.2.7 for conditions where no data has been provided for Register 60_{16}. Verification of the settings of Register 19_{16} in regards to Register 60_{16} will be verified in subsequent sections as data is provided for Register 60_{16}.

2.7.3.3 Minimum Update Interval of Registers 18_{16} to $1C_{16}$ (§2.2.25.3.3)

No direct test procedure is required at this time as EHS data has yet to be provided to the transponder. Appropriate update checks are made in subsequent sections as data is provided.

2.7.4 Register $1D_{16}$ to $1F_{16}$ Mode S Specific Services MSP Capability (§2.2.25.4)

Introduction:

The intent of this procedure is to validate that the transponder properly replies to GICB Extraction Interrogations (e.g., requests) for Register $1D_{16}$ through Register $1F_{16}$.

2.7.4.1 Register $1D_{16}$ Mode S Specific Services MSP Capability (§2.2.25.4)

Interrogate the transponder with the following GICB Extraction interrogation in order to extract the Register $1D_{16}$ Mode S Specific Services Capability Report.

REGISTER $1D_{16}$ MODE S SPECIFIC SERVICES MSP CAPABILITY GICB EXTRACTION EXTENDED DATA SOURCE INTERROGATION SETUP									
1 ---- 5	6 ---- 8	9 --- 13	14-16	17 -- 20	21 -- 24	25	26	27—28	29 --- 32
				"SD"					
"UF" =	**"PC" =**	**"RR" =**	**"DI" =**	**"IIS" =**	**"RRS =**	**"X" =**	**"LOS" =**	**"XX" =**	**"TMS" =**
4	0	**17** (11 HEX)	**7**	0	**D**	0	0	0	0

Verify that the transponder replies with a "DF" = 20 reply with:

Bits **33** –through- **88** (bits **1** –through- **56** of the "MB" field) set to ZERO (0) to indicate NO Capability has been established to service the Mode S Specific Services (MSP channel) designated in Register $1D_{16}$.

RHS_Commentary: ***Change made in blue above. Remove this commentary after making change in review copy.***

2.7.4.2 Register $1E_{16}$ Mode S Specific Services MSP Capability (§2.2.25.4)

Interrogate the transponder with the following GICB Extraction interrogation in order to extract the Register $1E_{16}$ Mode S Specific Services Capability Report.

REGISTER $1E_{16}$ MODE S SPECIFIC SERVICES MSP CAPABILITY GICB EXTRACTION EXTENDED DATA SOURCE INTERROGATION SETUP									
1 ---- 5	6 ---- 8	9 --- 13	14-16	17 -- 20	21 -- 24	25	26	27—28	29 --- 32
				"SD"					
"UF" =	**"PC" =**	**"RR" =**	**"DI" =**	**"IIS" =**	**"RRS =**	**"X" =**	**"LOS" =**	**"XX" =**	**"TMS" =**
4	0	**17** (11 HEX)	**7**	0	**E**	0	0	0	0

Verify that the transponder replies with a "DF" = 20 reply with:

Bits **33** –through- **88** (bits **1** –through- **56** of the "MB" field) set to ZERO (0) to indicate NO Capability has been established to service the Mode S Specific Services (MSP channel) designated in Register $1E_{16}$.

RHS_Commentary: ***Change made in blue above. Remove this commentary after making change in review copy.***

2.7.4.3 Register $1F_{16}$ Mode S Specific Services MSP Capability (§2.2.25.4)

RHS_Commentary: ***Change made in blue above. Remove this commentary after making change in review copy.***

Interrogate the transponder with the following GICB Extraction interrogation in order to extract the Register $1F_{16}$ Mode S Specific Services Capability Report.

REGISTER $1F_{16}$ MODE S SPECIFIC SERVICES MSP CAPABILITY GICB EXTRACTION EXTENDED DATA SOURCE INTERROGATION SETUP									
1 ---- 5	6 ---- 8	9 --- 13	14-16	17 -- 20	21 -- 24	25	26	27—28	29 --- 32
				"SD"					
"UF" =	**"PC" =**	**"RR" =**	**"DI" =**	**"IIS" =**	**"RRS =**	**"X" =**	**"LOS" =**	**"XX" =**	**"TMS" =**
4	0	**17** (11 HEX)	**7**	0	**F**	0	0	0	0

Verify that the transponder replies with a "DF" = 20 reply with:

Bits **33** –through- **88** (bits **1** –through- **56** of the "MB" field) set to ZERO (0) to indicate NO Capability has been established to service the Mode S Specific Services (MSP channel) designated in Register $1F_{16}$.

RHS_Commentary: ***Change made in blue above. Remove this commentary after making change in review copy.***

Note: *Up to this point, the EHS Test Procedures have been written sequentially so as to align with the sequence of the requirements given in §2.2.25. This was possible up to this point as NO ELS or EHS data has been provided to the unit under test. Once data is being provided to the unit under test, the changing of the data drives changes into multiple registers at virtually the same time. This presents a problem in attempting to develop test procedures that sequentially track the requirements which have been stated on a register basis as opposed to a functional basis. Therefore, the remainder of the ELS Test Procedures are developed on a functional basis with traceability to the requirements in §2.2.25 indicated in the procedures as appropriate.*

2.7.5 Register 40_{16} – Selected Vertical Intention (§2.2.25.5)

No test procedure required.

2.7.5.1 Part 1: Register 40_{16} and Register $5F_{16}$ Initial Conditions: (§2.2.25.5 and 2.2.25.7)

Note: *The primary purpose of the following initial procedure is to verify that Register 40_{16} and Register $5F_{16}$ are set to ALL ZERO as no capability has been established.*

a. **Register 40_{16} Initial Setting—Part a:** (§2.2.25.5)

Interrogate the transponder with the following GICB Extraction interrogation in order to extract the Register 40_{16}.

REGISTER 40_{16} SELECTED VERTICAL INTENTION GICB EXTRACTION DATA SOURCE INTERROGATION SETUP					
1 ---- 5	6 ---- 8	9 --- 13	14-16	17 -- 20	21 ---------- 32
				"SD"	
"UF" =	**"PC" =**	**"RR" =**	**"DI" =**	**"IIS" =**	**"NOT ASSIGNED" =**
4	0	20 (14 HEX)	**0**	0	0

Verify that the transponder replies with a "DF" = 20 reply with Bit **33** –through- **88** ("BDS" subfield (bit **1** –through- **56** of the "MB" field)] set to ALL ZERO (0).

b. **Register 40_{16} Initial Setting—Part B:** (§2.2.25.5)

Interrogate the transponder with the following GICB Extraction interrogation in order to extract the Register 40_{16}.

REGISTER 40_{16} SELECTED VERTICAL INTENTION GICB EXTRACTION EXTENDED DATA SOURCE INTERROGATION SETUP									
1 ---- 5	6 ---- 8	9 --- 13	14-16	17 -- 20	21 -- 24	25	26	27—28	29 --- 32
				"SD"					
"UF" =	**"PC" =**	**"RR" =**	**"DI" =**	**"IIS" =**	**"RRS =**	**"X" =**	**"LOS" =**	**"XX" =**	**"TMS" =**
4	0	**20** (14 HEX)	**7**	0	**0**	0	0	0	0

Verify that the transponder replies with the same content as required in section 2.7.5.a.

Note: *Two separate interrogations are used as Register 40_{16} can be extracted by using either the Data Source or Extended Data Source extraction protocols.*

c. **Register $5F_{16}$ Initial Setting:** (§2.2.25.7)

Interrogate the transponder with the following GICB Extraction interrogation in order to extract the Register $5F_{16}$.

REGISTER $5F_{16}$ QUASI-STATIC PARAMETER MONITORING GICB EXTRACTION EXTENDED DATA SOURCE INTERROGATION SETUP									
1 ---- 5	6 ---- 8	9 --- 13	14-16	17 -- 20	21 -- 24	25	26	27—28	29 --- 32
				"SD"					
"UF" =	**"PC" =**	**"RR" =**	**"DI" =**	**"IIS" =**	**"RRS =**	**"X" =**	**"LOS" =**	**"XX" =**	**"TMS" =**
4	0	**21** (15 HEX)	**7**	0	**F**	0	0	0	0

Verify that the transponder replies with a "**DF**" = **20** reply with Bits **33** through **88** (bits **1** through **56** of the **"MB"** field) set to "**0**" to indicate **NO** Capability has been established to service the parameters designated in Register $5F_{16}$.

2.7.5.2 PART 2: Register 40_{16} - Selected Vertical Intention Validation (§2.2.25 –through- 2.2.25.5)

Notes:

1. *The primary intent of Part 2 beyond data validation in Register 40_{16} is to validate capability declaration, initiation of the Comm. B Broadcast due to initial Register 40_{16} servicing, and that the MCP /FCU Selected Altitude, FMS Selected Altitude, Barometric Pressure Setting, and FMS Vertical Mode Bit Counts Selected in Register $5F_{16}$ go to **"01"**.*

2. *Review all subparagraphs of Part 2 prior to performing tests. This is necessary to establish the appropriate timing between changing data inputs and interrogations.*

a. **Data Input Initialization:** (§2.2.25.5.1 and 2.2.25.5.2)

(1). Mode Control Panel Selected Altitude: (§2.2.25.5.2.1)

Via the appropriate Mode Control Panel (or other) interface, provide the transponder with the following Selected Altitude data at a minimum rate of 5 per second in order to provide appropriate Mode Control Panel Selected Altitude data.

MCP / FCU Selected Altitude Input Data				
[See Note 1]		**[See Note 2]**		
Data Value (feet)	**Typical Binary Encoding**	**Rounded Input Data Value (feet)**	**Rounded Input Encoding**	**Knob -in- Motion**
+ 36,669	0__1000 1111 0011 1101	+ 36,672	0__100 1111 0100	NO

Notes:

1. ***Data Input Value*** *and* ***Typical Binary Encoding*** *represent the data as it is provided to the transponder.*

2. ***Rounded Input Data Value*** *and* ***Rounded Input Encoding*** *represent the data as it is expected to be seen in the* ***"MB"*** *field of Register* 40_{16}.

3. *The bit shown to the left of the underscore represents the arithmetic sign bit.*

RHS Commentary: ***Change made in blue above. Remove this commentary after making change in review copy.***

(2). Flight Management System (FMS) Selected Altitude: (§2.2.25.5.2.2)

Via the appropriate FMS (or other) interface, provide the transponder with the following FMS Selected Altitude data at a minimum rate of 5 per second in order to provide appropriate FMS Selected Altitude data.

Flight Management System (FMS) Selected Altitude Input Data				
[See Note 1]		**[See Note 2]**		
Data Value (feet)	**Typical Binary Encoding**	**Rounded Input Data Value (feet)**	**Rounded Input Encoding**	**Knob -in- Motion**
+ 32,250	0__0111 1111 1011 1110	+ 32,256	0__0111 1110 0000	NO

Notes:

1. ***Data Input Value*** *and* ***Typical Binary Encoding*** *represent the data as it is provided to the transponder.*

2. ***Rounded Input Data Value*** *and* ***Rounded Input Encoding*** *represent the data as it is expected to be seen in the* ***"MB"*** *field of Register* 40_{16}.

(3). Air Data System (ADS) input of Barometric Pressure Setting: (§2.2.25.5.2.3)

Via the appropriate ADS (or other) interface, provide the transponder with the following Barometric Pressure Setting data at a minimum rate of 5 per second in order to provide appropriate Barometric Pressure Setting data.

Air Data System (ADS) Barometric Pressure Setting Input Data		
[See Note 1]		**[See Note 2]**
Data Value (millibars)	**Typical Binary Coded Decimal (BCD) Encoding**	**Input Encoding**
+ 1,209.5	001 0010 0000 1001 0101	1111 1111 1111

Notes:

1. ***Data Input Value*** *and* ***Typical Binary Coded Decimal (BCD) Encoding*** *represent the data as it is provided to the transponder.*

2. ***Input Encoding*** *represent the data as it is expected to be seen in the* ***"MB"*** *field of Register* 40_{16}.

Barometric Correction Encoding Derivation														
12095/2	=	6047	_	1	94/2	=	47	_	0	0010 1111 0011 1111 Hex	==	2F3F Hex	==	12095 Decimal
6047/2	=	3023	_	1	47/2	=	23	_	1	1110 0000 1100 0000 Hex	==	E0C0 Hex	==	-8000 millibars
3023/2	=	1511	_	1	23/2	=	11	_	1	0000 1111 1111 1111 Hex	==	0FFF Hex	==	4095 Decimal
1511/2	=	755	_	1	11/2	=	5	_	1					
755/2	=	377	_	1	5/2	=	2	_	1	**Map Bits 28 through 40 of Register 40_{16} as:**				1111 1111 1111
377/2	=	188	_	1	2/2	=	1	_	0					
188/2	=	94	_	0	½	=	0	_	1					

(4). FMS Vertical Mode Bits: (§2.2.25.5.2.4)

Via the appropriate interface, provide the transponder with appropriate information with which to set the FMS Vertical Mode Bits as indicated in the following table:

FMS Vertical Mode Bits Input Data				
FMS Vertical Mode Bits	**Status of MCP / FCU Mode Bits**	**VNAV Mode**	**Altitude Hold Mode**	**Approach Mode**
Register 40_{16} "MB" Field Bit	**48**	**49**	**50**	**51**
Input Bit or State Setting (See Note 1)	1	0	0	0

Notes:

1. *For bit **48**, **"0"** indicates that no mode information is being provided with which to set bits **49** through **51**, and **"1"** indicates that mode information is being provided with which to set bits **49** through **51**. For bits **49** through **51**, **"0"** indicates that the mode is "Not Active", and **"1"** indicates that the mode is "Active".*
2. *When **No** FMS Vertical Mode Bit information is provided to the transponder, it is expected that bits **48** through **51** will be set to **"0"**.*

(5). Target Altitude Bits: (§2.2.25.5.2.6)

Via the appropriate interface, provide the transponder with appropriate information with which to set the Target Altitude Bits as indicated in the following table:

Target Altitude Bits Input Data			
Target Altitude Bits	**Status of Target Altitude Source Bits**	**Target Altitude Source MSB**	**Target Altitude Source LSB**
Register 40_{16} "MB" Field Bits	**54**	**55**	**56**
Input Bit or State Setting (See Note 1)	1	0	0

Note:

1. *For bit **54**, **"0"** indicates that no information is being provided with which to set bits **55** and **56**, and **"1"** indicates that information is being provided with which to set bits **55** and **56**. For bits **55** and **56**, **"00"** indicates that the target altitude source is **Unknown**.*
2. *When **No** Target Altitude Bit information is provided to the transponder, it is expected that bits **54** through **56** will be set to **"0"**.*

b. **Register 40_{16} Capability Verification:** (§2.2.25.1.4 and 2.2.25.5 –through- 2.2.25.5.3)

Within **ONE** (1) second of providing the transponder with data as detailed in Part 2.a., interrogate the transponder with the following GICB Extraction interrogation in order to extract the Register 40_{16} – Selected Vertical Intention data.

REGISTER 40_{16} SELECTED VERTICAL INTENTION GICB EXTRACTION EXTENDED DATA SOURCE INTERROGATION SETUP									
1 ---- 5	6 ---- 8	9 --- 13	14-16	17 -- 20	21 -- 24	25	26	27—28	29 --- 32
				"SD"					
"UF" =	**"PC" =**	**"RR" =**	**"DI" =**	**"IIS" =**	**"RRS =**	**"X" =**	**"LOS" =**	**"XX" =**	**"TMS" =**
4	0	**20** (14 HEX)	**7**	0	**0**	0	0	0	0

Notes:

1. *The interrogation should initiate the **"B"** timer for **18 ±1.0** seconds since a Comm-B Broadcast is initiated.*

2. *In this case, the Comm-B Broadcast is caused by the contents of Register 40_{16} changing. This change causes a change to Register 17_{16}, which then forces a change to Register 10_{16}, which then results in the initiation of the Comm-B Broadcast.*

(1). Verify that the transponder replies with a **"DF" = 20** reply.

(2). During replies to this interrogation sequence and subsequent interrogations during this test procedure, monitor the **"DR"** field. If the **"DR"** field changes to **4, 5, 6,** or **7**, then the transponder has initiated a Comm-B Broadcast.

When the "DR" field changes, start a Test Timer to monitor that the "B"-Timer runs for **18 ±1.0** seconds.

"DR" = 4 or 5 if TCAS Information IS NOT available

= 6 or 7 if TCAS Information IS available.

(3). Verify that the "**DF"=20** reply **"MB"** field provides Selected Vertical Intention Data as follows:

Part 2.b.(3) DF = 20, Selected Vertical Intention "MB" Field															
Reply Bits:	33	34 ---------- 45	46	47 ---------- 58	59	60 ---------- 71	72 ---- 79	80	81	82	83	84- 85	86	87 -- 88
"MB" Bits:	1	2 ---------- 13	14	15 ---------- 26	27	28 ---------- 39	40 --- 47	48	49	50	51	52 - 53	54	55 -- 56
Field:	**Selected Altitude**		**FMS Selected Altitude**		**Baro. Pressure Setting**		**RSVD**	**MCP**	**VNAV**	**A-HLD**	**APP**	**RSVD**	**Target**	**Target**
	Status	Data	Status	Data	Status	Data		Mode	Mode	Mode	Mode		Status	SRC
Data:	1	1000 1111 0100	1	0111 1110 0000	1	1111 1111 1111	00000000	1	0	0	0	00	1	00

c. **Quasi-Static Parameter Monitoring, Register $5F_{16}$:** (§2.2.25.7)

Within **0.5** seconds of completing the reply acceptance in Part 2.b., interrogate the transponder with the following GICB Extraction interrogation in order to extract the Register $5F_{16}$ Quasi-Static Parameter Monitoring Capability.

REGISTER $5F_{16}$ QUASI-STATIC PARAMETER MONITORING GICB EXTRACTION EXTENDED DATA SOURCE INTERROGATION SETUP									
1 ---- 5	6 ---- 8	9 --- 13	14-16	17 -- 20	21 -- 24	25	26	27—28	29 --- 32
				"SD"					
"UF" =	**"PC" =**	**"RR" =**	**"DI" =**	**"IIS" =**	**"RRS =**	**"X" =**	**"LOS" =**	**"XX" =**	**"TMS" =**
4	0	**21** (15 HEX)	**7**	0	**F**	0	0	0	0

Verify that the transponder replies with a "**DF**" = **20** reply with:

(1). Bits **33** and **34** (bits **1** and **2** of the **"MB"** field) are set to "**01**" respectively to indicate that the Selected Altitude parameter in Register 40_{16} has changed.

(2). Bits **55** and **56** (bits **23** and **24** of the **"MB"** field) are set to **"01"** respectively to indicate that the FMS Selected Altitude parameter in Register 40_{16} has changed.

(3). Bits **57** and **58** (bits **25** and **26** of the **"MB"** field) are set to **"01"** respectively to indicate that the Barometric Pressure Setting parameter in Register 40_{16} has changed.

(4). Bits **49** and **50** (bits **17** and **18** of the **"MB"** field) are set to **"01"** respectively to indicate that the FMS Vertical Mode Bits in Register 40_{16} have changed.

d. **Common Usage GICB Capability Report, Register 17_{16}:** (§2.2.25.2)

Within **FIVE** (5) seconds of the interrogation/reply sequence in Part 2.c., interrogate the transponder with the following GICB Extraction interrogation in order to extract the Register 17_{16} Common Usage GICB Capability Report:

REGISTER 17_{16} COMMON USAGE GICB CAPABILITY GICB EXTRACTION EXTENDED DATA SOURCE INTERROGATION SETUP									
1 ---- 5	6 ---- 8	9 --- 13	14-16	17 -- 20	21 -- 24	25	26	27—28	29 --- 32
				"SD"					
"UF" =	**"PC" =**	**"RR" =**	**"DI" =**	**"IIS" =**	**"RRS =**	**"X" =**	**"LOS" =**	**"XX" =**	**"TMS" =**
4	0	**17** (11 HEX)	**7**	0	**7**	0	0	0	0

Verify that the transponder replies with a "**DF**" = **20** reply with:

(1). Bit **41** (bit **9** of the **"MB"** field) set to "**1**" to indicate that Register 40_{16} servicing capability has been established and that data is valid.

(2). Bit **55** (bit **23** of the **"MB"** field) set to **"1"** to indicate that Register $5F_{16}$ servicing capability has been established and that data is valid.

e. **Mode S Specific Services GICB Capability, Register 18_{16}:** (§2.2.25.3)

Within **FIVE** (5) seconds of the interrogation/reply sequence in Part 2.c., Interrogate the transponder with the following GICB Extraction interrogation in order to extract the Register 18_{16} Mode S Specific Services GICB Capability:

REGISTER 18_{16} MODE S SPECIFIC SERVICES CAPABILITY GICB EXTRACTION EXTENDED DATA SOURCE INTERROGATION SETUP									
1 ---- 5	6 ---- 8	9 --- 13	14-16	17 -- 20	21 -- 24	25	26	27—28	29 --- 32
				"SD"					
"UF" =	**"PC" =**	**"RR" =**	**"DI" =**	**"IIS" =**	**"RRS =**	**"X" =**	**"LOS" =**	**"XX" =**	**"TMS" =**
4	0	**17** (11 HEX)	**7**	0	**8**	0	0	0	0

Verify that the transponder replies with a "**DF**" = **20** reply with:

(1). Bit **64** (bit **32** of the **"MB"** field) set to "**1**" to indicate that Register 19_{16} servicing capability has been established.

(2). Bit **65** (bit **33** of the **"MB"** field) set to **"1"** to indicate that Register 18_{16} servicing capability has been established.

(3). Bit **66** (bit **34** of the **"MB"** field) set to **"1"** to indicate that Register 17_{16} servicing capability has been established.

f. **Mode S Specific Services GICB Capability, Register 19_{16}:** (§2.2.25.3)

Within **FIVE** (5) seconds of the interrogation/reply sequence in Part 2.c., interrogate the transponder with the following GICB Extraction interrogation in order to extract the Register 19_{16} Mode S Specific Services GICB Capability:

REGISTER 19_{16} MODE S SPECIFIC SERVICES CAPABILITY GICB EXTRACTION EXTENDED DATA SOURCE INTERROGATION SETUP									
1 ---- 5	6 ---- 8	9 --- 13	14-16	17 -- 20	21 -- 24	25	26	27—28	29 --- 32
				"SD"					
"UF" =	**"PC" =**	**"RR" =**	**"DI" =**	**"IIS" =**	**"RRS =**	**"X" =**	**"LOS" =**	**"XX" =**	**"TMS" =**
4	0	**17** (11 HEX)	**7**	0	**9**	0	0	0	0

Verify that the transponder replies with a "**DF**" = **20** reply with:

(1). Bit **80** (bit **49** of the **"MB"** field) set to "**1**" to indicate that Register 40_{16} servicing capability has been established.

(2). Bit **50** (bit **18** of the **"MB"** field) set to **"1"** to indicate that Register $5F_{16}$ servicing capability has been established.

g. **Broadcast Extraction, Register 10_{16}:** (§2.2.25.1 and 2.2.25.2.3)

Within less than **15** seconds after starting the Test Timer in Part 2.b.(2), e.g., the "B" Timer monitor, interrogate the transponder with the following Comm-B Extraction interrogations in order to extract the Comm-B broadcast message which should be the Data Link Capability Report contained in Register 10_{16}.

COMM-B BROADCAST EXTRACTION INTERROGATION SETUP									
1 ---- 5	6 ---- 8	9 --- 13	14-16	17 -- 20	21 -- 24	25	26	27—28	29 --- 32
				"SD"					
"UF" =	**"PC" =**	**"RR" =**	**"DI" =**	**"IIS" =**	**"RRS =**	**"X" =**	**"LOS" =**	**"XX" =**	**"TMS" =**
4	0	**16** (10 HEX)	**7**	0	**0**	0	0	0	0

Within **ONE** (1) second of starting the interrogations, verify that the transponder replies with a "DF" = 20 reply with:

Note: *The 1 second is based on the update rate specified for Register 10_{16}.*

(1). "DR" = 4 or 5 if TCAS Information **IS NOT** available

= 6 or 7 if TCAS Information **IS** available.

(2). Bit **33** –through- **40** (bit 1 –through- **8** of the "MB" field) set to 10 HEX (**0001 0000**).

(3). Bit **57** ["Mode S Specific Services Capability" (bit **25** of the "MB" field)] set to ONE (1) to indicate that the transponder has established Mode S Specific Services Capability.

(4). Bit **65** ["AIS" subfield (bit **33** of the "MB" field)] set to ZERO (0) to indicate that there is NO Aircraft Identification capability,

(5). Bit **67** ["SIC" subfield (bit **35** of the "MB" field)] set to ONE (1) to indicate that the transponder does have "SI" capability.

(6). Bit **68** ["Common Usage GICB Capability Report" (bit **36** of the "MB" field)] set to ONE (1) to indicate that Register 17_{16} is being serviced or has changed.

h. **Comm-B Broadcast due to Data Link Capability Change Termination:** (§2.2.25.1 and 2.2.25.2.3)

Continue to interrogate the transponder with the interrogation described in Part 2. g. (e.g., the last step) until the transponder replies with a "DF" = 20 reply with "DR" NOT EQUAL to 4, 5, 6, or 7.

Verify that the elapsed time of the Test Timer started in Part 2.b.(2) is 18 +/- 1 second.

Note: *At this time, the "B" timer started in Part 2.b.(2). as broadcast due to a change in Data Link Capability should have terminated.*

2.7.5.3 PART 3: Register 40_{16} - Selected Vertical Intention - Data Change Validation - Set 2 (§2.2.25 –through- 2.2.25.5)

Notes:

1. *The primary intent of Part 3 beyond data validation in Register 40_{16} is to validate that the MCP /FCU Selected Altitude, FMS Selected Altitude, Barometric Pressure Setting, and FMS Vertical Mode Bit Counts in Register $5F_{16}$ go to **"10"**.*

2. *Review all subparagraphs of Part 3 prior to performing tests. This is necessary to establish the appropriate timing between changing data inputs and interrogations.*

a. **Parameter Data Input Change:** (§2.2.25.5.1 and 2.2.25.5.2)

(1). Mode Control Panel Selected Altitude: (§2.2.25.5.2.1)

Via the appropriate Mode Control Panel (or other) interface, provide the transponder with the following Selected Altitude data at a minimum rate of 5 per second in order to provide appropriate Mode Control Panel Selected Altitude data.

MCP / FCU Selected Altitude Input Data				
[See Note 1]		**[See Note 2]**		
Data Value (feet)	**Typical Binary Encoding**	**Rounded Input Data Value (feet)**	**Rounded Input Encoding**	**Knob -in- Motion**
+ 24,252	0__0101 1110 1011 1100	+ 24,256	0__ 0101 1110 1100	NO

Notes:

1. ***Data Input Value*** *and* ***Typical Binary Encoding*** *represent the data as it is provided to the transponder.*

2. ***Rounded Input Data Value*** *and* ***Rounded Input Encoding*** *represent the data as it is expected to be seen in the **"MB"** field of Register 40_{16}.*

(2). Flight Management System (FMS) Selected Altitude: (§2.2.25.5.2.2)

Via the appropriate FMS (or other) interface, provide the transponder with the following FMS Selected Altitude data at a minimum rate of 5 per second in order to provide appropriate FMS Selected Altitude data.

Flight Management System (FMS) Selected Altitude Input Data				
[See Note 1]		[See Note 2]		
Data Value (feet)	**Typical Binary Encoding**	**Rounded Input Data Value (feet)**	**Rounded Input Encoding**	**Knob -in- Motion**
+ 24,252	0__0101 1110 1011 1100	+ 24,256	0__ 0101 1110 1100	NO

Notes:

1. ***Data Input Value*** *and* ***Typical Binary Encoding*** *represent the data as it is provided to the transponder.*

2. ***Rounded Input Data Value*** *and* ***Rounded Input Encoding*** *represent the data as it is expected to be seen in the* ***"MB"*** *field of Register* 40_{16}.

(3). Air Data System (ADS) input of Barometric Pressure Setting: (§2.2.25.5.2.3)

Via the appropriate ADS (or other) interface, provide the transponder with the following Barometric Pressure Setting data at a minimum rate of 5 per second in order to provide appropriate Barometric Pressure Setting data.

Air Data System (ADS) Barometric Pressure Setting Input Data		
[See Note 1]		[See Note 2]
Data Value (millibars)	**Typical Binary Coded Decimal (BCD) Encoding**	**Input Encoding**
+ 799.5	000 0111 1001 1001 0101	0000 0000 0000

Notes:

1. ***Data Input Value*** *and* ***Typical Binary Coded Decimal (BCD) Encoding*** *represent the data as it is provided to the transponder.*

2. ***Input Encoding*** *represent the data as it is expected to be seen in the* ***"MB"*** *field of Register* 40_{16}.

Barometric Correction Encoding Derivation														
7995/2	=	3997	_	1	62/2	=	31	_	0	0001 1111 0011 1011	Hex	==	1F3B Hex	== 7995 Decimal
3997/2	=	1998	_	1	31/2	=	15	_	1	1110 0000 1100 0000	Hex	==	E0C0 Hex	== -8000 millibars
1998/2	=	999	_	0	15/2	=	7	_	1	1111 1111 1111 1011	Hex	==	FFFB Hex	== - 5 Decimal
999/2	=	499	_	1	7/2	=	3	_	1	0000 0000 0000 0100				
499/2	=	249	_	1	3/2	=	1	_	1	0000 0000 0000 0001				
249/2	=	124	_	1	1/2	=	0	_	1	0000 0000 0000 0101				
124/2	=	62	_	0						Result is Negative: therefore, the input data is invalid.				
										Map Bits 28 through 40 of Register 40_{16} as: 0000 0000 0000				

(4). FMS Vertical Mode Bits: (§2.2.25.5.2.4)

Via the appropriate interface, provide the transponder with appropriate information with which to set the FMS Vertical Mode Bits as indicated in the following table:

FMS Vertical Mode Bits Input Data				
FMS Vertical Mode Bits	**Status of MCP / FCU Mode Bits**	**VNAV Mode**	**Altitude Hold Mode**	**Approach Mode**
Register 40_{16} "MB" Field Bit	**48**	**49**	**50**	**51**
Input Bit or State Setting (See Note 1)	1	1	0	1

Notes:

1. *For bit **48**, **"0"** indicates that no mode information is being provided with which to set bits **49** through **51**, and **"1"** indicates that mode information is being provided with which to set bits **49** through **51**. For bits **49** through **51**, **"0"** indicates that the mode is "Not Active", and **"1"** indicates that the mode is "Active".*
2. *When **No** FMS Vertical Mode Bit information is provided to the transponder, it is expected that bits **48** through **51** will be set to **"0"**.*

(5). Target Altitude Bits: (§2.2.25.5.2.6)

Via the appropriate interface, provide the transponder with appropriate information with which to set the Target Altitude Bits as indicated in the following table:

Target Altitude Bits Input Data			
Target Altitude Bits	**Status of Target Altitude Source Bits**	**Target Altitude Source MSB**	**Target Altitude Source LSB**
Register 40_{16} "MB" Field Bits	**54**	**55**	**56**
Input Bit or State Setting (See Note 1)	1	0	1

Notes:

1. *For bit **54**, **"0"** indicates that no information is being provided with which to set bits **55** and **56**, and **"1"** indicates that information is being provided with which to set bits **55** and **56**. For bits **55** and **56**, **"00"** indicates that the target altitude source is **Aircraft Altitude**.*
2. *When **No** Target Altitude Bit information is provided to the transponder, it is expected that bits **54** through **56** will be set to **"0"**.*

b. **Register 40_{16} Validation:** (§2.2.25.1.4 and 2.2.25.5 –through- 2.2.25.5.3)

Within **ONE** (1) second of changing the Selected Altitude data source in Part 3.a, interrogate the transponder with the following GICB Extraction interrogation in order to extract the Register 40_{16} Selected Vertical Intention Data:

REGISTER 40_{16} SELECTED VERTICAL INTENTION GICB EXTRACTION EXTENDED DATA SOURCE INTERROGATION SETUP									
1 ---- 5	6 ---- 8	9 --- 13	14-16	17 -- 20	21 -- 24	25	26	27—28	29 --- 32
				"SD"					
"UF" =	**"PC" =**	**"RR" =**	**"DI" =**	**"IIS" =**	**"RRS =**	**"X" =**	**"LOS" =**	**"XX" =**	**"TMS" =**
4	0	**20** (14 HEX)	**7**	0	**0**	0	0	0	0

Verify that the **DF=20** reply **"MB"** field provides Selected Vertical Intention Data as follows:

Part 3.b.(1) DF = 20, Selected Vertical Intention "MB" Field															
Reply Bits:	33	34 ---------- 45	46	47 ---------- 58	59	60 ---------- 71	72 ---- 79	80	81	82	83	84- 85	86	87 -- 88
"MB" Bits:	1	2 ---------- 13	14	15 ---------- 26	27	28 ---------- 39	40 --- 47	48	49	50	51	52 - 53	54	55 -- 56
Field:	**Selected Altitude**		**FMS Selected Altitude**		**Baro. Pressure Setting**		**RSVD**	**MCP**	**VNAV**	**A-HLD**	**APP**	**RSVD**	**Target**	**Target**
	Status	Data	Status	Data	Status	Data		Mode	Mode	Mode	Mode		Status	SRC
Data:	1	0101 1110 1100	1	0101 1110 1100	0	0000 0000 0000	00000000	1	1	0	1	00	1	01

c. **<u>Quasi-Static Parameter Monitoring, Register $5F_{16}$:</u>** (§2.2.25.7)

Within **0.5** seconds of completing the reply acceptance in Part 3.b., interrogate the transponder with the following GICB Extraction interrogation in order to extract the Register $5F_{16}$ Quasi-Static Parameter Monitoring Capability:

REGISTER $5F_{16}$ QUASI-STATIC PARAMETER MONITORING GICB EXTRACTION EXTENDED DATA SOURCE INTERROGATION SETUP									
1 ---- 5	6 ---- 8	9 --- 13	14-16	17 -- 20	21 -- 24	25	26	27—28	29 --- 32
				"SD"					
"UF" =	**"PC" =**	**"RR" =**	**"DI" =**	**"IIS" =**	**"RRS =**	**"X" =**	**"LOS" =**	**"XX" =**	**"TMS" =**
4	0	**21** (15 HEX)	**7**	0	**F**	0	0	0	0

Verify that the transponder replies with a "**DF**" = **20** reply with:

(1). Bits **33** and **34** (bits **1** and **2** of the **"MB"** field) are set to "**10**" respectively to indicate that the Selected Altitude parameter in Register 40_{16} has changed.

(2). Bits **55** and **56** (bits **23** and **24** of the **"MB"** field) are set to **"10"** respectively to indicate that the FMS Selected Altitude parameter in Register 40_{16} has changed.

(3). Bits **57** and **58** (bits **25** and **26** of the **"MB"** field) are set to **"10"** respectively to indicate that the Barometric Pressure Setting parameter in Register 40_{16} has changed.

(4). Bits **49** and **50** (bits **17** and **18** of the **"MB"** field) are set to **"10"** respectively to indicate that the FMS Vertical Mode Bits in Register 40_{16} have changed.

d. **<u>Common Usage GICB Capability Report, Register 17_{16}:</u>** (§2.2.25.2)

Within **FIVE** (5) seconds of the interrogation/reply sequence in Part 3.c., interrogate the transponder with the following GICB Extraction interrogation in order to extract the Register 17_{16} Common Usage GICB Capability Report:

REGISTER 17_{16} COMMON USAGE GICB CAPABILITY GICB EXTRACTION EXTENDED DATA SOURCE INTERROGATION SETUP									
1 ---- 5	6 ---- 8	9 --- 13	14-16	17 -- 20	21 -- 24	25	26	27—28	29 --- 32
				"SD"					
"UF" =	**"PC" =**	**"RR" =**	**"DI" =**	**"IIS" =**	**"RRS =**	**"X" =**	**"LOS" =**	**"XX" =**	**"TMS" =**
4	0	**17** (11 HEX)	**7**	0	**7**	0	0	0	0

Verify that the transponder replies with a "**DF**" = **20** reply with:

(1). Bit **41** (bit **9** of the **"MB"** field) set to "**1**" to indicate that Register 40_{16} servicing capability has been established and that data is valid.

(2). Bit **55** (bit **23** of the **"MB"** field) set to **"1"** to indicate that Register $5F_{16}$ servicing capability has been established and that data is valid.

e. **Mode S Specific Services GICB Capability, Register 18_{16}:** (§2.2.25.3)

Within **FIVE** (5) seconds of the interrogation/reply sequence in Part 3.c., Interrogate the transponder with the following GICB Extraction interrogation in order to extract the Register 18_{16} Mode S Specific Services GICB Capability:

REGISTER 18_{16} MODE S SPECIFIC SERVICES CAPABILITY GICB EXTRACTION EXTENDED DATA SOURCE INTERROGATION SETUP									
1 ---- 5	6 ---- 8	9 --- 13	14-16	17 -- 20	21 -- 24	25	26	27—28	29 --- 32
				"SD"					
"UF" =	**"PC" =**	**"RR" =**	**"DI" =**	**"IIS" =**	**"RRS =**	**"X" =**	**"LOS" =**	**"XX" =**	**"TMS" =**
4	0	**17** (11 HEX)	**7**	0	**8**	0	0	0	0

Verify that the transponder replies with a "**DF**" = **20** reply having:

(1). Bit **64** (bit **32** of the **"MB"** field) set to "**1**" to indicate that Register 19_{16} servicing capability has been established.

(2). Bit **65** (bit **33** of the **"MB"** field) set to **"1"** to indicate that Register 18_{16} servicing capability has been established.

(3). Bit **66** (bit **34** of the **"MB"** field) set to **"1"** to indicate that Register 17_{16} servicing capability has been established.

f. **Mode S Specific Services GICB Capability, Register 19_{16}:** (§2.2.25.3)

Within **FIVE** (5) seconds of the interrogation/reply sequence in Part 3.c., interrogate the transponder with the following GICB Extraction interrogation in order to extract the Register 19_{16} Mode S Specific Services GICB Capability:

REGISTER 19_{16} MODE S SPECIFIC SERVICES CAPABILITY GICB EXTRACTION EXTENDED DATA SOURCE INTERROGATION SETUP									
1 ---- 5	6 ---- 8	9 --- 13	14-16	17 -- 20	21 -- 24	25	26	27—28	29 --- 32
				"SD"					
"UF" =	**"PC" =**	**"RR" =**	**"DI" =**	**"IIS" =**	**"RRS =**	**"X" =**	**"LOS" =**	**"XX" =**	**"TMS" =**
4	0	**17** (11 HEX)	**7**	0	**9**	0	0	0	0

Verify that the transponder replies with a "**DF**" = **20** reply having:

(1). Bit **80** (bit **49** of the **"MB"** field) set to "**1**" to indicate that Register 40_{16} servicing capability has been established.

(2). Bit **50** (bit **18** of the **"MB"** field) set to **"1"** to indicate that Register $5F_{16}$ servicing capability has been established.

2.7.5.4 PART 4: Register 40_{16} - Selected Vertical Intention - Data Change Validation - Set 3 (§2.2.25 –through- 2.2.25.5)

Notes:

1. *The primary intent of Part 4 beyond data validation in Register 40_{16} is to validate that the MCP /FCU Selected Altitude, FMS Selected Altitude, Barometric Pressure Setting, and FMS Vertical Mode Bit Counts in Register $5F_{16}$ go to "11".*

2. *Review all subparagraphs of Part 4 prior to performing tests. This is necessary to establish the appropriate timing between changing data inputs and interrogations.*

a. **Selected Altitude and Barometric Pressure Change:** (§2.2.25.5.1 and 2.2.25.5.2)

(1). Mode Control Panel Selected Altitude: (§2.2.25.5.2.1)

Via the appropriate Mode Control Panel (or other) interface, provide the transponder with the following Selected Altitude data at a minimum rate of 5 per second in order to provide appropriate Mode Control Panel Selected Altitude data.

MCP / FCU Selected Altitude Input Data				
[See Note 1]		[See Note 2]		
Data Value (feet)	**Typical Binary Encoding**	**Rounded Input Data Value (feet)**	**Rounded Input Encoding**	**Knob -in- Motion**
+ 28,666	0__0110 1111 1111 1010	+ 24,672	0__0111 0000 0000	NO

Notes:

1. ***Data Input Value*** *and* ***Typical Binary Encoding*** *represent the data as it is provided to the transponder.*
2. ***Rounded Input Data Value*** *and* ***Rounded Input Encoding*** *represent the data as it is expected to be seen in the* ***"MB"*** *field of Register 40_{16}.*

(2). Flight Management System (FMS) Selected Altitude: (§2.2.25.5.2.2)

Via the appropriate FMS (or other) interface, provide the transponder with the following FMS Selected Altitude data at a minimum rate of 5 per second in order to provide appropriate FMS Selected Altitude data.

Flight Management System (FMS) Selected Altitude Input Data				
[See Note 1]		[See Note 2]		
Data Value (feet)	**Typical Binary Encoding**	**Rounded Input Data Value (feet)**	**Rounded Input Encoding**	**Knob -in- Motion**
+ 28,666	0__0110 1111 1111 1010	+ 28,672	0__0111 0000 0000	NO

Notes:

1. ***Data Input Value*** *and* ***Typical Binary Encoding*** *represent the data as it is provided to the transponder.*
2. ***Rounded Input Data Value*** *and* ***Rounded Input Encoding*** *represent the data as it is expected to be seen in the* ***"MB"*** *field of Register 40_{16}.*

(3). ADS input of Barometric Pressure Setting: (§2.2.25.5.2.3)

Via the appropriate ADS (or other) interface, provide the transponder with the following Barometric Pressure Setting data at a minimum rate of 5 per second in order to provide appropriate Barometric Pressure Setting data.

Air Data System (ADS) Barometric Pressure Setting Input Data		
[See Note 1]		**[See Note 2]**
Data Value (millibars)	**Typical Binary Coded Decimal (BCD) Encoding**	**Input Encoding**
+ 942.7	000 1001 0100 0010 0111	0101 1001 0011

Notes:

1. ***Data Input Value*** *and* ***Typical Binary Coded Decimal (BCD) Encoding*** *represent the data as it is provided to the transponder.*

2. ***Input Encoding*** *represent the data as it is expected to be seen in the* ***"MB"*** *field of Register* 40_{16}.

Barometric Correction Encoding Derivation														
9427/2	=	4713	_	1	73/2	=	36	_	1	0010 0100 1101 0011 Hex	==	24D3 Hex	==	9427 Decimal
4713/2	=	2356	_	1	36/2	=	18	_	0	1110 0000 1100 0000 Hex	==	E0C0 Hex	==	-8000 millibars
2356/2	=	1178	_	0	18/2	=	9	_	0	0000 0101 1001 0011 Hex	==	0593 Hex	==	1427 Decimal
1178/2	=	589	_	0	9/2	=	4	_	1					
589/2	=	294	_	1	4/2	=	2	_	0	**Map Bits 28 through 40 of Register 40_{16} as:**				**0101 1001 0011**
294/2	=	147	_	0	2/2	=	1	_	0					
147/2	=	73	_	1	1/2	=	0	_	1					

(4). FMS Vertical Mode Bits: (§2.2.25.5.2.4)

Via the appropriate interface, provide the transponder with appropriate information with which to set the FMS Vertical Mode Bits as indicated in the following table:

FMS Vertical Mode Bits Input Data				
FMS Vertical Mode Bits	**Status of MCP / FCU Mode Bits**	**VNAV Mode**	**Altitude Hold Mode**	**Approach Mode**
Register 40_{16} "MB" Field Bit	**48**	**49**	**50**	**51**
Input Bit or State Setting (See Note 1)	1	0	1	0

Notes:

1. *For bit* ***48****,* ***"0"*** *indicates that no mode information is being provided with which to set bits* ***49*** *through* ***51****, and* ***"1"*** *indicates that mode information is being provided with which to set bits* ***49*** *through* ***51****. For bits* ***49*** *through* ***51****,* ***"0"*** *indicates that the mode is "Not Active", and* ***"1"*** *indicates that the mode is "Active".*

2. *When* ***No*** *FMS Vertical Mode Bit information is provided to the transponder, it is expected that bits* ***48*** *through* ***51*** *will be set to* ***"0"****.*

(5). Target Altitude Bits: (§2.2.25.5.2.6)

Via the appropriate interface, provide the transponder with appropriate information with which to set the Target Altitude Bits as indicated in the following table:

Target Altitude Bits Input Data			
Target Altitude Bits	**Status of Target Altitude Source Bits**	**Target Altitude Source MSB**	**Target Altitude Source LSB**
Register 40_{16} "MB" Field Bits	**54**	**55**	**56**
Input Bit or State Setting (See Note 1)	1	1	0

Notes:

1. *For bit **54**, **"0"** indicates that no information is being provided with which to set bits **55** and **56**, and **"1"** indicates that information is being provided with which to set bits **55** and **56**. For bits **55** and **56**, **"00"** indicates that the target altitude source is **MCP / FCU Selected Altitude**.*

2. *When **No** Target Altitude Bit information is provided to the transponder, it is expected that bits **54** through **56** will be set to **"0"**.*

b. **Register 40_{16} Validation:** (§2.2.25.1.4 and 2.2.25.5 –through- 2.2.25.5.3)

Within **ONE** (1) of changing the Selected Altitude data source in Part 4.a, interrogate the transponder with the following GICB Extraction interrogation in order to extract the Register 40_{16} Selected Vertical Intention Data:

REGISTER 40_{16} SELECTED VERTICAL INTENTION GICB EXTRACTION EXTENDED DATA SOURCE INTERROGATION SETUP									
1 ---- 5	6 ---- 8	9 --- 13	14-16	17 -- 20	21 -- 24	25	26	27—28	29 --- 32
				"SD"					
"UF" =	**"PC" =**	**"RR" =**	**"DI" =**	**"IIS" =**	**"RRS =**	**"X" =**	**"LOS" =**	**"XX" =**	**"TMS" =**
4	0	**20** (14 HEX)	**7**	0	**0**	0	0	0	0

Verify that the **DF=20** reply **"MB"** field provides Selected Vertical Intention Data as follows:

Part 4.b.(1) DF = 20, Selected Vertical Intention "MB" Field															
Reply Bits:	33	34 ---------- 45	46	47 ---------- 58	59	60 ---------- 71	72 ---- 79	80	81	82	83	84- 85	86	87 -- 88
"MB" Bits:	1	2 ---------- 13	14	15 ---------- 26	27	28 ---------- 39	40 --- 47	48	49	50	51	52 - 53	54	55 -- 56
Field:	**Selected Altitude**		**FMS Selected Altitude**		**Baro. Pressure Setting**		**RSVD**	**MCP**	**VNAV**	**A-HLD**	**APP**	**RSVD**	**Target**	**Target**
	Status	Data	Status	Data	Status	Data		Mode	Mode	Mode	Mode		Status	SRC
Data:	1	0111 0000 0000	1	0111 0000 0000	1	0101 1001 0011	00000000	1	0	1	0	00	1	10

c. **Quasi-Static Parameter Monitoring, Register $5F_{16}$:** (§2.2.25.7)

Within **0.5** seconds of completing the reply acceptance in Part 4.b., interrogate the transponder with the following GICB Extraction interrogation in order to extract the Register $5F_{16}$ Quasi-Static Parameter Monitoring Capability:

REGISTER $5F_{16}$ QUASI-STATIC PARAMETER MONITORING GICB EXTRACTION EXTENDED DATA SOURCE INTERROGATION SETUP									
1 ---- 5	6 ---- 8	9 --- 13	14-16	17 -- 20	21 -- 24	25	26	27—28	29 --- 32
				"SD"					
"UF" =	**"PC" =**	**"RR" =**	**"DI" =**	**"IIS" =**	**"RRS =**	**"X" =**	**"LOS" =**	**"XX" =**	**"TMS" =**
4	0	**21** (15 HEX)	**7**	0	**F**	0	0	0	0

Verify that the transponder replies with a "**DF**" = **20** reply with:

(1). Bits **33** and **34** (bits **1** and **2** of the **"MB"** field) are set to "**11**" respectively to indicate that the Selected Altitude parameter in Register 40_{16} has changed.

(2). Bits **55** and **56** (bits **23** and **24** of the **"MB"** field) are set to **"11"** respectively to indicate that the FMS Selected Altitude parameter in Register 40_{16} has changed.

(3). Bits **57** and **58** (bits **25** and **26** of the **"MB"** field) are set to **"11"** respectively to indicate that the Barometric Pressure Setting parameter in Register 40_{16} has changed.

(4). Bits **49** and **50** (bits **17** and **18** of the **"MB"** field) are set to **"11"** respectively to indicate that the FMS Vertical Mode Bits in Register 40_{16} have changed.

d. **Common Usage GICB Capability Report, Register 17_{16}:** (§2.2.25.2)

Within **FIVE** (5) seconds of the interrogation/reply sequence in Part 4.c., interrogate the transponder with the following GICB Extraction interrogation in order to extract the Register 17_{16} Common Usage GICB Capability Report.

REGISTER 17_{16} COMMON USAGE GICB CAPABILITY GICB EXTRACTION EXTENDED DATA SOURCE INTERROGATION SETUP									
1 ---- 5	6 ---- 8	9 --- 13	14-16	17 -- 20	21 -- 24	25	26	27—28	29 --- 32
				"SD"					
"UF" =	**"PC" =**	**"RR" =**	**"DI" =**	**"IIS" =**	**"RRS =**	**"X" =**	**"LOS" =**	**"XX" =**	**"TMS" =**
4	0	**17** (11 HEX)	**7**	0	**7**	0	0	0	0

Verify that the transponder replies with a "**DF**" = **20** reply with:

(1). Bit **41** (bit **9** of the **"MB"** field) set to "**1**" to indicate that Register 40_{16} servicing capability has been established and that data is valid.

(2). Bit **55** (bit **23** of the **"MB"** field) set to **"1"** to indicate that Register $5F_{16}$ servicing capability has been established and that data is valid.

e. **Mode S Specific Services GICB Capability, Register 18_{16}:** (§2.2.25.3)

Within **FIVE** (5) seconds of the interrogation/reply sequence in Part 4.c., Interrogate the transponder with the following GICB Extraction interrogation in order to extract the Register 18_{16} Mode S Specific Services GICB Capability:

REGISTER 18_{16} MODE S SPECIFIC SERVICES CAPABILITY GICB EXTRACTION EXTENDED DATA SOURCE INTERROGATION SETUP									
1 ---- 5	6 ---- 8	9 --- 13	14-16	17 -- 20	21 -- 24	25	26	27—28	29 --- 32
				"SD"					
"UF" =	**"PC" =**	**"RR" =**	**"DI" =**	**"IIS" =**	**"RRS =**	**"X" =**	**"LOS" =**	**"XX" =**	**"TMS" =**
4	0	**17** (11 HEX)	**7**	0	**8**	0	0	0	0

Verify that the transponder replies with a "**DF**" = **20** reply with:

(1). Bit **64** (bit **32** of the **"MB"** field) set to "**1**" to indicate that Register 19_{16} servicing capability has been established.

(2). Bit **65** (bit **33** of the **"MB"** field) set to **"1"** to indicate that Register 18_{16} servicing capability has been established.

(3). Bit **66** (bit **34** of the **"MB"** field) set to **"1"** to indicate that Register 17_{16} servicing capability has been established.

f. **Mode S Specific Services GICB Capability, Register 19_{16}:** (§2.2.25.3)

Within **FIVE** (5) seconds of the interrogation/reply sequence in Part 4.c., interrogate the transponder with the following GICB Extraction interrogation in order to extract the Register 19_{16} Mode S Specific Services GICB Capability:

REGISTER 19_{16} MODE S SPECIFIC SERVICES CAPABILITY GICB EXTRACTION EXTENDED DATA SOURCE INTERROGATION SETUP									
1 ---- 5	6 ---- 8	9 --- 13	14-16	17 -- 20	21 -- 24	25	26	27—28	29 --- 32
				"SD"					
"UF" =	**"PC" =**	**"RR" =**	**"DI" =**	**"IIS" =**	**"RRS =**	**"X" =**	**"LOS" =**	**"XX" =**	**"TMS" =**
4	0	**17** (11 HEX)	**7**	0	**9**	0	0	0	0

Verify that the transponder replies with a "**DF**" = **20** reply with:

(1). Bit **80** (bit **49** of the **"MB"** field) set to "**1**" to indicate that Register 40_{16} servicing capability has been established.

(2). Bit **50** (bit **18** of the **"MB"** field) set to **"1"** to indicate that Register $5F_{16}$ servicing capability has been established.

2.7.5.5 PART 5: Register 40_{16} - Selected Vertical Intention - Data Change Validation - Set 4 (§2.2.25 –through- 2.2.25.5)

Notes:

1. *The primary intent of Part 5 beyond data validation in Register 40_{16} is to validate that the MCP /FCU Selected Altitude, FMS Selected Altitude, Barometric Pressure Setting, and FMS Vertical Mode Bit Counts in Register $5F_{16}$ go to "01" as opposed to "00".*

2. *Review all subparagraphs of Part 5 prior to performing tests. This is necessary to establish the appropriate timing between changing data inputs and interrogations.*

a. **Data Input Initialization:** (§2.2.25.5.1 and 2.2.25.5.2)

(1). Mode Control Panel Selected Altitude: (§2.2.25.5.2.1)

Via the appropriate Mode Control Panel (or other) interface, provide the transponder with the following Selected Altitude data at a minimum rate of 5 per second in order to provide appropriate Mode Control Panel Selected Altitude data.

MCP / FCU Selected Altitude Input Data				
[See Note 1]		**[See Note 2]**		
Data Value (feet)	**Typical Binary Encoding**	**Rounded Input Data Value (feet)**	**Rounded Input Encoding**	**Knob -in- Motion**
+ 32,250	0__0111 1101 1111 0101	+ 32,256	0__0111 1110 0000	NO

Notes:

1. ***Data Input Value*** *and* ***Typical Binary Encoding*** *represent the data as it is provided to the transponder.*

2. ***Rounded Input Data Value*** *and* ***Rounded Input Encoding*** *represent the data as it is expected to be seen in the* ***"MB"*** *field of Register 40_{16}.*

(2). Flight Management System (FMS) Selected Altitude: (§2.2.25.5.2.2)

Via the appropriate FMS (or other) interface, provide the transponder with the following FMS Selected Altitude data at a minimum rate of 5 per second in order to provide appropriate FMS Selected Altitude data.

Flight Management System (FMS) Selected Altitude Input Data				
[See Note 1]		[See Note 2]		
Data Value (feet)	**Typical Binary Encoding**	**Rounded Input Data Value (feet)**	**Rounded Input Encoding**	**Knob -in- Motion**
+ 36,669	0__1000 1111 0011 1101	+ 36,672	0__ 1000 1111 0100	NO

Notes:

1. ***Data Input Value*** *and* ***Typical Binary Encoding*** *represent the data as it is provided to the transponder.*

2. ***Rounded Input Data Value*** *and* ***Rounded Input Encoding*** *represent the data as it is expected to be seen in the* ***"MB"*** *field of Register* 40_{16}.

(3). Air Data System (ADS) input of Barometric Pressure Setting: (§2.2.25.5.2.3)

Via the appropriate ADS (or other) interface, provide the transponder with the following Barometric Pressure Setting data at a minimum rate of 5 per second in order to provide appropriate Barometric Pressure Setting data.

Air Data System (ADS) Barometric Pressure Setting Input Data		
[See Note 1]		[See Note 2]
Data Value (millibars)	**Typical Binary Coded Decimal (BCD) Encoding**	**Input Encoding**
+ 1,209.5	001 0010 0000 1001 0101	1111 1111 1111

Notes:

1. ***Data Input Value*** *and* ***Typical Binary Coded Decimal (BCD) Encoding*** *represent the data as it is provided to the transponder.*

2. ***Input Encoding*** *represent the data as it is expected to be seen in the* ***"MB"*** *field of Register* 40_{16}.

Barometric Correction Encoding Derivation														
12095/2	=	6047	_	1	94/2	=	47	_	0	0010 1111 0011 1111 Hex	==	2F3F Hex	==	12095 Decimal
6047/2	=	3023	_	1	47/2	=	23	_	1	1110 0000 1100 0000 Hex	==	E0C0 Hex	==	-8000 millibars
3023/2	=	1511	_	1	23/2	=	11	_	1	0000 1111 1111 1111 Hex	==	0FFF Hex	==	4095 Decimal
1511/2	=	755	_	1	11/2	=	5	_	1					
755/2	=	377	_	1	5/2	=	2	_	1	**Map Bits 28 through 40 of Register 40_{16} as:**				1111 1111 1111
377/2	=	188	_	1	2/2	=	1	_	0					
188/2	=	94	_	0	½	=	0	_	1					

(4). FMS Vertical Mode Bits: (§2.2.25.5.2.4)

Via the appropriate interface, provide the transponder with appropriate information with which to set the FMS Vertical Mode Bits as indicated in the following table:

FMS Vertical Mode Bits Input Data				
FMS Vertical Mode Bits	**Status of MCP / FCU Mode Bits**	**VNAV Mode**	**Altitude Hold Mode**	**Approach Mode**
Register 40_{16} "MB" Field Bit	**48**	**49**	**50**	**51**
Input Bit or State Setting (See Note 1)	1	1	1	0

Notes:

1. *For bit **48**, **"0"** indicates that no mode information is being provided with which to set bits **49** through **51**, and **"1"** indicates that mode information is being provided with which to set bits **49** through **51**. For bits **49** through **51**, **"0"** indicates that the mode is "Not Active", and **"1"** indicates that the mode is "Active".*
2. *When **No** FMS Vertical Mode Bit information is provided to the transponder, it is expected that bits **48** through **51** will be set to **"0"**.*

(5). Target Altitude Bits: (§2.2.25.5.2.6)

Via the appropriate interface, provide the transponder with appropriate information with which to set the Target Altitude Bits as indicated in the following table:

Target Altitude Bits Input Data			
Target Altitude Bits	**Status of Target Altitude Source Bits**	**Target Altitude Source MSB**	**Target Altitude Source LSB**
Register 40_{16} "MB" Field Bits	**54**	**55**	**56**
Input Bit or State Setting (See Note 1)	1	1	1

Notes:

1. *For bit **54**, **"0"** indicates that no information is being provided with which to set bits **55** and **56**, and **"1"** indicates that information is being provided with which to set bits **55** and **56**. For bits **55** and **56**, **"00"** indicates that the target altitude source is **FMS Selected Altitude**.*
2. *When **No** Target Altitude Bit information is provided to the transponder, it is expected that bits **54** through **56** will be set to **"0"**.*

b. **Register 40_{16} Capability Verification**: (§2.2.25.1.4 and 2.2.25.5 –through- 2.2.25.5.3)

Within **ONE** (1) second of providing the transponder with data as detailed in Part 5.a., interrogate the transponder with the following GICB Extraction interrogation in order to extract the Register 40_{16} - Selected Vertical Intention data.

REGISTER 40_{16} SELECTED VERTICAL INTENTION GICB EXTRACTION EXTENDED DATA SOURCE INTERROGATION SETUP									
1 ---- 5	6 ---- 8	9 --- 13	14-16	17 -- 20	21 -- 24	25	26	27—28	29 --- 32
				"SD"					
"UF" =	**"PC" =**	**"RR" =**	**"DI" =**	**"IIS" =**	**"RRS =**	**"X" =**	**"LOS" =**	**"XX" =**	**"TMS" =**
4	0	**20** (14 HEX)	**7**	0	**0**	0	0	0	0

Verify that the **DF=20** reply **"MB"** field provides Selected Vertical Intention Data as follows:

Part 5.b.(1) DF = 20, Selected Vertical Intention "MB" Field															
Reply Bits:	33	34 ---------- 45	46	47 ---------- 58	59	60 ---------- 71	72 ---- 79	80	81	82	83	84- 85	86	87 -- 88
"MB" Bits:	1	2 ---------- 13	14	15 ---------- 26	27	28 ---------- 39	40 --- 47	48	49	50	51	52 - 53	54	55 -- 56
Field:	**Selected Altitude**		**FMS Selected Altitude**		**Baro. Pressure Setting**		**RSVD**	**MCP**	**VNAV**	**A-HLD**	**APP**	**RSVD**	**Target**	**Target**
	Status	Data	Status	Data	Status	Data		Mode	Mode	Mode	Mode		Status	SRC
Data:	1	0111 1110 0000	1	1000 1111 0100	1	1111 1111 1111	00000000	1	1	1	0	00	1	11

c. **<u>Quasi-Static Parameter Monitoring, Register $5F_{16}$:</u>** (§2.2.25.7)

Within **0.5** seconds of completing the reply acceptance in Part 5.b., interrogate the transponder with the following GICB Extraction interrogation in order to extract the Register $5F_{16}$ Quasi-Static Parameter Monitoring Capability:

REGISTER $5F_{16}$ QUASI-STATIC PARAMETER MONITORING GICB EXTRACTION EXTENDED DATA SOURCE INTERROGATION SETUP									
1 ---- 5	6 ---- 8	9 --- 13	14-16	17 -- 20	21 -- 24	25	26	27—28	29 --- 32
				"SD"					
"UF" =	**"PC" =**	**"RR" =**	**"DI" =**	**"IIS" =**	**"RRS =**	**"X" =**	**"LOS" =**	**"XX" =**	**"TMS" =**
4	0	**21** (15 HEX)	**7**	0	**F**	0	0	0	0

Verify that the transponder replies with a "**DF**" = **20** reply with:

(1). Bits **33** and **34** (bits **1** and **2** of the **"MB"** field) are set to "**01**" respectively to indicate that the Selected Altitude parameter in Register 40_{16} has changed.

(2). Bits **55** and **56** (bits **23** and **24** of the **"MB"** field) are set to **"01"** respectively to indicate that the FMS Selected Altitude parameter in Register 40_{16} has changed.

(3). Bits **57** and **58** (bits **25** and **26** of the **"MB"** field) are set to **"01"** respectively to indicate that the Barometric Pressure Setting parameter in Register 40_{16} has changed.

(4). Bits **49** and **50** (bits **17** and **18** of the **"MB"** field) are set to **"01"** respectively to indicate that the FMS Vertical Mode Bits in Register 40_{16} have changed.

d. **<u>Common Usage GICB Capability Report, Register 17_{16}:</u>** (§2.2.25.2)

Within **FIVE** (5) seconds of the interrogation/reply sequence in Part 5.c., interrogate the transponder with the following GICB Extraction interrogation in order to extract the Register 17_{16} Common Usage GICB Capability Report:

REGISTER 17_{16} COMMON USAGE GICB CAPABILITY GICB EXTRACTION EXTENDED DATA SOURCE INTERROGATION SETUP									
1 ---- 5	6 ---- 8	9 --- 13	14-16	17 -- 20	21 -- 24	25	26	27—28	29 --- 32
				"SD"					
"UF" =	**"PC" =**	**"RR" =**	**"DI" =**	**"IIS" =**	**"RRS =**	**"X" =**	**"LOS" =**	**"XX" =**	**"TMS" =**
4	0	**17** (11 HEX)	**7**	0	**7**	0	0	0	0

Verify that the transponder replies with a "**DF**" = **20** reply with:

(1). Bit **41** (bit **9** of the **"MB"** field) set to "**1**" to indicate that Register 40_{16} servicing capability has been established and that data is valid.

(2). Bit **55** (bit **23** of the **"MB"** field) set to **"1"** to indicate that Register $5F_{16}$ servicing capability has been established and that data is valid.

e. **Mode S Specific Services GICB Capability, Register 18_{16}:** (§2.2.25.3)

Within **FIVE** (5) seconds of the interrogation/reply sequence in Part 5.c., Interrogate the transponder with the following GICB Extraction interrogation in order to extract the Register 18_{16} Mode S Specific Services GICB Capability:

REGISTER 18_{16} MODE S SPECIFIC SERVICES CAPABILITY GICB EXTRACTION EXTENDED DATA SOURCE INTERROGATION SETUP									
1 ---- 5	6 ---- 8	9 --- 13	14-16	17 -- 20	21 -- 24	25	26	27—28	29 --- 32
				"SD"					
"UF" =	**"PC" =**	**"RR" =**	**"DI" =**	**"IIS" =**	**"RRS =**	**"X" =**	**"LOS" =**	**"XX" =**	**"TMS" =**
4	0	**17** (11 HEX)	**7**	0	**8**	0	0	0	0

Verify that the transponder replies with a "**DF**" = **20** reply with:

(1). Bit **64** (bit **32** of the **"MB"** field) set to "**1**" to indicate that Register 19_{16} servicing capability has been established.

(2). Bit **65** (bit **33** of the **"MB"** field) set to **"1"** to indicate that Register 18_{16} servicing capability has been established.

(3). Bit **66** (bit **34** of the **"MB"** field) set to **"1"** to indicate that Register 17_{16} servicing capability has been established.

f. **Mode S Specific Services GICB Capability, Register 19_{16}:** (§2.2.25.3)

Within FIVE (5) seconds of the interrogation/reply sequence in Part 5.c., interrogate the transponder with the following GICB Extraction interrogation in order to extract the Register 19_{16} Mode S Specific Services GICB Capability:

REGISTER 19_{16} MODE S SPECIFIC SERVICES CAPABILITY GICB EXTRACTION EXTENDED DATA SOURCE INTERROGATION SETUP									
1 ---- 5	6 ---- 8	9 --- 13	14-16	17 -- 20	21 -- 24	25	26	27—28	29 --- 32
				"SD"					
"UF" =	**"PC" =**	**"RR" =**	**"DI" =**	**"IIS" =**	**"RRS =**	**"X" =**	**"LOS" =**	**"XX" =**	**"TMS" =**
4	0	**17** (11 HEX)	**7**	0	**9**	0	0	0	0

Verify that the transponder replies with a "**DF**" = **20** reply with:

(1). Bit **80** (bit **49** of the **"MB"** field) set to "**1**" to indicate that Register 40_{16} servicing capability has been established.

(2). Bit **50** (bit **18** of the **"MB"** field) set to **"1"** to indicate that Register $5F_{16}$ servicing capability has been established.

2.7.5.6 PART 6: Register 40_{16} - Selected Vertical Intention - Data Change Validation - Set 5 (§2.2.25 –through- 2.2.25.5)

Notes:

1. *The primary intent of Part 6 beyond data validation in Register 40_{16} is to validate that the MCP /FCU Selected Altitude, FMS Selected Altitude, Barometric Pressure Setting, and FMS Vertical Mode Bit Counts in Register $5F_{16}$ go to **"00"** as parameter data input has been terminated***.**

2. *Review all subparagraphs of Part **6** prior to performing tests. This is necessary to establish the appropriate timing between changing data inputs and interrogations.*

a. **Data Input Initialization:** (§2.2.25.5.1 and 2.2.25.5.2)

(1). Mode Control Panel Selected Altitude: (§2.2.25.5.2.1)

Via the appropriate Mode Control Panel (or other) interface, terminate provision of valid data to the transponder with Selected Altitude data.

(2). Flight Management System (FMS) Selected Altitude: (§2.2.25.5.2.2)

Via the appropriate FMS (or other) interface, terminate provision of valid data to the transponder with FMS Selected Altitude data.

(3). Air Data System (ADS) input of Barometric Pressure Setting: (§2.2.25.5.2.3)

Via the appropriate ADS (or other) interface, terminate provision of valid data to the transponder with the Barometric Pressure Setting data.

(4). FMS Vertical Mode Bits: (§2.2.25.5.2.4)

Via the appropriate interface, terminate provision of valid data to the transponder with which to set the FMS Vertical Mode Bits.

(5). Target Altitude Bits: (§2.2.25.5.2.6)

Via the appropriate interface, terminate provision of valid data to the transponder with which to set the Target Altitude Bits.

b. **Register 40_{16} Capability Verification**: (§2.2.25.1.4 and 2.2.25.5 –through- 2.2.25.5.3)

Within **ONE** (1) second of providing the transponder with data as detailed in Part 6.a., interrogate the transponder with the following GICB Extraction interrogation in order to extract the Register 40_{16} - Selected Vertical Intention data.

REGISTER 40_{16} SELECTED VERTICAL INTENTION GICB EXTRACTION EXTENDED DATA SOURCE INTERROGATION SETUP									
1 ---- 5	6 ---- 8	9 --- 13	14-16	17 -- 20	21 -- 24	25	26	27—28	29 --- 32
				"SD"					
"UF" =	**"PC" =**	**"RR" =**	**"DI" =**	**"IIS" =**	**"RRS =**	**"X" =**	**"LOS" =**	**"XX" =**	**"TMS" =**
4	0	**20** (14 HEX)	**7**	0	**0**	0	0	0	0

Note: *The interrogation should initiate the "B" timer for **18 ±1.0** seconds since a Comm-B Broadcast is initiated because servicing of Register $5F_{16}$ capability has changed. Note that the update to Register $5F_{16}$ may take up to one minute to change the "DR" Field to declare the broadcast.*

RHS_Commentary: *Added second sentence to emphasize that 5F update takes up to a second. Remove this commentary after making change to review copy.*

(1). Verify that the transponder replies with a "DF" = 20 reply.

(2). During replies to this interrogation sequence and subsequent interrogations during this test procedure, monitor the "DR" field. If the "DR" field changes to 4, 5, 6, or 7, then the transponder has initiated a Comm-B Broadcast.

When the "DR" field changes, start a Test Timer to monitor that the "B"-Timer runs for 18 ±1.0 seconds.

"DR" = 4 or 5 if TCAS Information IS NOT available

= 6 or 7 if TCAS Information IS available.

(3). Verify that the **DF=20** reply **"MB"** field provides Selected Vertical Intention Data with:

Part 6.b. DF = 20, Selected Vertical Intention "MB" Field															
Reply Bits:	33	34 ---------- 45	46	47 ---------- 58	59	60 ---------- 71	72 ---- 79	80	81	82	83	84- 85	86	87 -- 88
"MB" Bits:	1	2 ---------- 13	14	15 ---------- 26	27	28 ---------- 39	40 --- 47	48	49	50	51	52 - 53	54	55 -- 56
Field:	**Selected Altitude**		**FMS Selected Altitude**		**Baro. Pressure Setting**		**RSVD**	**MCP**	**VNAV**	**A-HLD**	**APP**	**RSVD**	**Target**	**Target**
	Status	Data	Status	Data	Status	Data		Mode	Mode	Mode	Mode		Status	SRC
Data:	0	0000 0000 0000	0	0000 0000 0000	0	0000 0000 0000	00000000	0	0	0	0	00	0	00

c. **Quasi-Static Parameter Monitoring, Register $5F_{16}$:** (§2.2.25.7)

Within **0.5** seconds of completing the reply acceptance in Part 6.b., interrogate the transponder with the following GICB Extraction interrogation in order to extract the Register $5F_{16}$ Quasi-Static Parameter Monitoring Capability:

REGISTER $5F_{16}$ QUASI-STATIC PARAMETER MONITORING GICB EXTRACTION EXTENDED DATA SOURCE INTERROGATION SETUP									
1 ---- 5	6 ---- 8	9 --- 13	14-16	17 -- 20	21 -- 24	25	26	27—28	29 --- 32
				"SD"					
"UF" =	**"PC" =**	**"RR" =**	**"DI" =**	**"IIS" =**	**"RRS =**	**"X" =**	**"LOS" =**	**"XX" =**	**"TMS" =**
4	0	**21** (15 HEX)	**7**	0	**F**	0	0	0	0

Verify that the transponder replies with a "**DF**" = **20** reply with:

(1). Bits **33** and **34** (bits **1** and **2** of the **"MB"** field) are set to "**00**" respectively to indicate that the Selected Altitude parameter in Register 40_{16} has changed as data input has been terminated.

(2). Bits **55** and **56** (bits **23** and **24** of the **"MB"** field) are set to **"00"** respectively to indicate that the FMS Selected Altitude parameter in Register 40_{16} has changed as data input has been terminated.

(3). Bits **57** and **58** (bits **25** and **26** of the **"MB"** field) are set to **"00"** respectively to indicate that the Barometric Pressure Setting parameter in Register 40_{16} has changed as data input has been terminated.

(4). Bits **49** and **50** (bits **17** and **18** of the **"MB"** field) are set to **"00"** respectively to indicate that the FMS Vertical Mode Bits in Register 40_{16} have changed as data input has been terminated.

d. **Common Usage GICB Capability Report, Register 17_{16}:** (§2.2.25.2)

Within **FIVE** (5) seconds of the interrogation/reply sequence in Part 6.c., interrogate the transponder with the following GICB Extraction interrogation in order to extract the Register 17_{16} Common Usage GICB Capability Report:

REGISTER 17_{16} COMMON USAGE GICB CAPABILITY GICB EXTRACTION EXTENDED DATA SOURCE INTERROGATION SETUP									
1 ---- 5	6 ---- 8	9 --- 13	14-16	17 -- 20	21 -- 24	25	26	27—28	29 --- 32
				"SD"					
"UF" =	**"PC" =**	**"RR" =**	**"DI" =**	**"IIS" =**	**"RRS =**	**"X" =**	**"LOS" =**	**"XX" =**	**"TMS" =**
4	0	**17** (11 HEX)	**7**	0	**7**	0	0	0	0

Verify that the transponder replies with a "**DF**" = **20** reply with:

(1). Bit **41** (bit **9** of the **"MB"** field) set to "**0**" to indicate that Register 40_{16} servicing capability has been lost and that data is NOT VALID.

(2). Bit **55** (bit **23** of the **"MB"** field) set to **"1"** to indicate that Register $5F_{16}$ servicing capability has been established and that data is valid.

e. **Mode S Specific Services GICB Capability, Register 18_{16}:** (§2.2.25.3)

Within **FIVE** (5) seconds of the interrogation/reply sequence in Part 6.c., Interrogate the transponder with the following GICB Extraction interrogation in order to extract the Register 18_{16} Mode S Specific Services GICB Capability:

REGISTER 18_{16} MODE S SPECIFIC SERVICES CAPABILITY GICB EXTRACTION EXTENDED DATA SOURCE INTERROGATION SETUP									
1 ---- 5	6 ---- 8	9 --- 13	14-16	17 -- 20	21 -- 24	25	26	27—28	29 --- 32
				"SD"					
"UF" =	**"PC" =**	**"RR" =**	**"DI" =**	**"IIS" =**	**"RRS =**	**"X" =**	**"LOS" =**	**"XX" =**	**"TMS" =**
4	0	**17** (11 HEX)	**7**	0	**8**	0	0	0	0

Verify that the transponder replies with a "**DF**" = **20** reply with:

(1). Bit **64** (bit **32** of the **"MB"** field) set to "**1**" to indicate that Register 19_{16} servicing capability has been established during the power-on cycle.

(2). Bit **65** (bit **33** of the **"MB"** field) set to **"1"** to indicate that Register 18_{16} servicing capability has been established during the power-on cycle.

(3). Bit **66** (bit **34** of the **"MB"** field) set to **"1"** to indicate that Register 17_{16} servicing capability has been established during the power-on cycle.

f. **Mode S Specific Services GICB Capability, Register 19_{16}:** (§2.2.25.3)

Within **FIVE** (5) seconds of the interrogation/reply sequence in Part 6.c., interrogate the transponder with the following GICB Extraction interrogation in order to extract the Register 19_{16} Mode S Specific Services GICB Capability:

REGISTER 19_{16} MODE S SPECIFIC SERVICES CAPABILITY GICB EXTRACTION EXTENDED DATA SOURCE INTERROGATION SETUP									
1 ---- 5	6 ---- 8	9 --- 13	14-16	17 -- 20	21 -- 24	25	26	27—28	29 --- 32
				"SD"					
"UF" =	**"PC" =**	**"RR" =**	**"DI" =**	**"IIS" =**	**"RRS =**	**"X" =**	**"LOS" =**	**"XX" =**	**"TMS" =**
4	0	**17** (11 HEX)	**7**	0	**9**	0	0	0	0

Verify that the transponder replies with a "**DF**" = **20** reply with:

(1). Bit **80** (bit **49** of the **"MB"** field) set to "**1**" to indicate that Register 40_{16} servicing capability has been established during the power-on cycle.

(2). Bit **50** (bit **18** of the **"MB"** field) set to **"1"** to indicate that Register $5F_{16}$ servicing capability has been established during the power-on cycle.

g. **Broadcast Extraction, Register 10_{16}:** (§2.2.25.1 and 2.2.25.2.3)

Within less than **15** seconds after starting the Test Timer in Part 6.b.(2), e.g., the "B" Timer monitor, interrogate the transponder with the following Comm-B Extraction interrogations in order to extract the Comm-B broadcast message which should be the Data Link Capability Report contained in Register 10_{16}.

COMM-B BROADCAST EXTRACTION INTERROGATION SETUP									
1 ---- 5	6 ---- 8	9 --- 13	14-16	17 -- 20	21 -- 24	25	26	27—28	29 --- 32
				"SD"					
"UF" =	**"PC" =**	**"RR" =**	**"DI" =**	**"IIS" =**	**"RRS =**	**"X" =**	**"LOS" =**	**"XX" =**	**"TMS" =**
4	0	**16** (10 HEX)	**7**	0	**0**	0	0	0	0

Within **ONE** (1) second of starting the interrogations, verify that the transponder replies with a "DF" = 20 reply with:

Note: *The 1 second is based on the update rate specified for Register 10_{16}.*

(1). "DR" = 4 or 5 if TCAS Information **IS NOT** available

= 6 or 7 if TCAS Information **IS** available.

(2). Bit **33** –through- **40** (bit 1 –through- **8** of the "MB" field) set to 10 HEX (**0001**

0000).

(3). Bit **57** ["Mode S Specific Services Capability" (bit **25** of the "MB" field)] set to ZERO (0) to indicate that the transponder has lost Mode S Specific Services Capability.

(4). Bit **65** ["AIS" subfield (bit **33** of the "MB" field)] set to ZERO (0) to indicate that there is NO Aircraft Identification capability,

(5). Bit **67** ["SIC" subfield (bit **35** of the "MB" field)] set to ONE (1) to indicate that the transponder does have "SI" capability.

(6). Bit **68** ["Common Usage GICB Capability Report" (bit **36** of the "MB" field)] set to ZERO (0) to indicate that Register 17_{16} has changed as Register 40_{16} data has been lost.

h. **Comm-B Broadcast due to Data Link Capability Change Termination:** (§2.2.25.1 and 2.2.25.2.3)

Continue to interrogate the transponder with the interrogation described in Part 6. g. (e.g., the last step) until the transponder replies with a "DF" = 20 reply with "DR" NOT EQUAL to 4, 5, 6, or 7.

Verify that the elapsed time of the Test Timer started in Part 2.b.(2) is 18 +/- 1 second.

Note: *At this time, the "B" timer started in Part 6.b.(2). as broadcast due to a change in Data Link Capability should have terminated.*

2.7.5.7 PART 7: Register 40_{16} - Selected Vertical Intention - Data Change Validation - Set 6 (§2.2.25 –through- 2.2.25.5)

Notes:

1. *The intent of Part 7 is to demonstrate that servicing of Register 40_{16} can be initiated by insertion of a single parameter, e.g., MCP Selected Altitude data. Part 7 also validates that Selected Altitude Count in Register $5F_{16}$ goes to* ***"01"*** *as the count should restart after having had a data termination.*

RHS Commentary: *Rewrote Note 1 to place emphasis on starting the register based on a single parameter. Secondary emphasis is placed on servicing Register $5F_{16}$. Previously, the note addressed Register $5F_{16}$ first. Remove this commentary after making change to review copy.*

2. *Review all subparagraphs of Part 7 prior to performing tests. This is necessary to establish the appropriate timing between changing data inputs and interrogations.*

a. **Data Input Initialization:** (§2.2.25.5.1 and 2.2.25.5.2)

(1). Mode Control Panel Selected Altitude: (§2.2.25.5.2.1)

Via the appropriate Mode Control Panel (or other) interface, provide the transponder with the following Selected Altitude data at a minimum rate of 5 per second in order to provide appropriate Mode Control Panel Selected Altitude data.

MCP / FCU Selected Altitude Input Data				
[See Note 1]		[See Note 2]		
Data Value (feet)	**Typical Binary Encoding**	**Rounded Input Data Value (feet)**	**Rounded Input Encoding**	**Knob -in- Motion**
+ 21,845	0__0101 0101 0101 0101	+ 21,840	0__0101 0101 0101	NO

Notes:

1. ***Data Input Value*** *and* ***Typical Binary Encoding*** *represent the data as it is provided to the transponder.*

2. ***Rounded Input Data Value*** *and* ***Rounded Input Encoding*** *represent the data as it is expected to be seen in the* ***"MB"*** *field of Register* 40_{16}.

(2). Flight Management System (FMS) Selected Altitude: (§2.2.25.5.2.2)

Continue to NOT provide FMS Selected Altitude data as established in Part 6.a.(2).

(3). Air Data System (ADS) input of Barometric Pressure Setting: (§2.2.25.5.2.3)

Continue to NOT provide Barometric Pressure Setting data as established in Part 6.a.(3).

(4). FMS Vertical Mode Bits: (§2.2.25.5.2.4)

Continue to NOT provide FMS Vertical Mode Bit data as established in Part 6.a.(4).

b. **Register 40_{16} Capability Verification**: (§2.2.25.1.4 and 2.2.25.5 –through- 2.2.25.5.3)

Within **ONE** (1) second of providing the transponder with data as detailed in Part 7.a., interrogate the transponder with the following GICB Extraction interrogation in order to extract the Register 40_{16} - Selected Vertical Intention data.

REGISTER 40_{16} SELECTED VERTICAL INTENTION GICB EXTRACTION EXTENDED DATA SOURCE INTERROGATION SETUP									
1 ---- 5	6 ---- 8	9 --- 13	14-16	17 -- 20	21 -- 24	25	26	27—28	29 --- 32
				"SD"					
"UF" =	**"PC" =**	**"RR" =**	**"DI" =**	**"IIS" =**	**"RRS =**	**"X" =**	**"LOS" =**	**"XX" =**	**"TMS" =**
4	0	**20** (14 HEX)	**7**	0	**0**	0	0	0	0

Note: *The interrogation should initiate the "B" timer for **18 ±1.0** seconds since a Comm-B Broadcast is initiated because servicing of Register $5F_{16}$ capability has changed. Note that the update to Register $5F_{16}$ may take up to one minute to change the "DR" Field to declare the broadcast.*

RHS_Commentary: *Added second sentence to emphasize that 5F update takes up to a second. Remove this commentary after making change to review copy.*

(1). Verify that the transponder replies with a **"DF" = 20** reply.

(2). During replies to this interrogation sequence and subsequent interrogations during this test procedure, monitor the **"DR"** field. If the **"DR"** field changes to **4, 5, 6**, or **7**, then the transponder has initiated a Comm-B Broadcast.

When the **"DR"** field changes, start a Test Timer to monitor that the **"B"**-Timer runs for **18 ±1.0** seconds.

"DR"	=	4 or 5	if TCAS Information IS NOT available
	=	6 or 7	if TCAS Information IS available.

(3). Verify that the **DF=20** reply **"MB"** field provides Selected Vertical Intention Data with:

Part 7.b. DF = 20, Selected Vertical Intention "MB" Field															
Reply Bits:	33	34 ---------- 45	46	47 ---------- 58	59	60 ---------- 71	72 ---- 79	80	81	82	83	84- 85	86	87 -- 88
"MB" Bits:	1	2 ---------- 13	14	15 ---------- 26	27	28 ---------- 39	40 --- 47	48	49	50	51	52 - 53	54	55 -- 56
Field:	**Selected Altitude**		**FMS Selected Altitude**		**Baro. Pressure Setting**		**RSVD**	**MCP**	**VNAV**	**A-HLD**	**APP**	**RSVD**	**Target**	**Target**
	Status	Data	Status	Data	Status	Data		Mode	Mode	Mode	Mode		Status	SRC
Data:	1	0101 0101 0101	0	0000 0000 0000	0	0000 0000 0000	00000000	0	0	0	0	00	0	00

c. **Quasi-Static Parameter Monitoring, Register $5F_{16}$:** (§2.2.25.7)

Within **0.5** seconds of completing the reply acceptance in Part 7.b., interrogate the transponder with the following GICB Extraction interrogation in order to extract the Register $5F_{16}$ Quasi-Static Parameter Monitoring Capability:

REGISTER $5F_{16}$ QUASI-STATIC PARAMETER MONITORING GICB EXTRACTION EXTENDED DATA SOURCE INTERROGATION SETUP									
1 ---- 5	6 ---- 8	9 --- 13	14-16	17 -- 20	21 -- 24	25	26	27—28	29 --- 32
				"SD"					
"UF" =	**"PC" =**	**"RR" =**	**"DI" =**	**"IIS" =**	**"RRS =**	**"X" =**	**"LOS" =**	**"XX" =**	**"TMS" =**
4	0	**21** (15 HEX)	**7**	0	**F**	0	0	0	0

Verify that the transponder replies with a "**DF**" = **20** reply with:

(1). Bits **33** and **34** (bits **1** and **2** of the **"MB"** field) are set to "**01**" respectively to indicate that the Selected Altitude parameter in Register 40_{16} has changed as data input was restarted after having been terminated.

(2). Bits **55** and **56** (bits **23** and **24** of the **"MB"** field) are set to **"00"** respectively to indicate that the FMS Selected Altitude parameter in Register 40_{16} has changed as data input has been terminated.

(3). Bits **57** and **58** (bits **25** and **26** of the **"MB"** field) are set to **"00"** respectively to indicate that the Barometric Pressure Setting parameter in Register 40_{16} has changed as data input has been terminated.

(4). Bits **49** and **50** (bits **17** and **18** of the **"MB"** field) are set to **"00"** respectively to indicate that the FMS Vertical Mode Bits in Register 40_{16} have changed as data input has been terminated.

d. **Common Usage GICB Capability Report, Register 17_{16}:** (§2.2.25.2)

Within **FIVE** (5) seconds of the interrogation/reply sequence in Part 7.c., interrogate the transponder with the following GICB Extraction interrogation in order to extract the Register 17_{16} Common Usage GICB Capability Report:

REGISTER 17_{16} COMMON USAGE GICB CAPABILITY GICB EXTRACTION EXTENDED DATA SOURCE INTERROGATION SETUP									
1 ---- 5	6 ---- 8	9 --- 13	14-16	17 -- 20	21 -- 24	25	26	27—28	29 --- 32
				"SD"					
"UF" =	**"PC" =**	**"RR" =**	**"DI" =**	**"IIS" =**	**"RRS =**	**"X" =**	**"LOS" =**	**"XX" =**	**"TMS" =**
4	0	**17** (11 HEX)	**7**	0	**7**	0	0	0	0

Verify that the transponder replies with a "**DF**" = **20** reply with:

(1). Bit **41** (bit **9** of the **"MB"** field) set to "**1**" to indicate that Register 40_{16} servicing capability has been established as new data has been provided.

(2). Bit **55** (bit **23** of the **"MB"** field) set to **"1"** to indicate that Register $5F_{16}$ servicing capability has been established and that data is valid.

e. **Mode S Specific Services GICB Capability, Register 18_{16}:** (§2.2.25.3)

Within **FIVE** (5) seconds of the interrogation/reply sequence in Part 7.c., Interrogate the transponder with the following GICB Extraction interrogation in order to extract the Register 18_{16} Mode S Specific Services GICB Capability:

REGISTER 18_{16} MODE S SPECIFIC SERVICES CAPABILITY GICB EXTRACTION EXTENDED DATA SOURCE INTERROGATION SETUP									
1 ---- 5	6 ---- 8	9 --- 13	14-16	17 -- 20	21 -- 24	25	26	27—28	29 --- 32
				"SD"					
"UF" =	**"PC" =**	**"RR" =**	**"DI" =**	**"IIS" =**	**"RRS =**	**"X" =**	**"LOS" =**	**"XX" =**	**"TMS" =**
4	0	**17** (11 HEX)	**7**	0	**8**	0	0	0	0

Verify that the transponder replies with a "**DF**" = **20** reply with:

(1). Bit **64** (bit **32** of the **"MB"** field) set to "**1**" to indicate that Register 19_{16} servicing capability has been established during the power-on cycle.

(2). Bit **65** (bit **33** of the **"MB"** field) set to **"1"** to indicate that Register 18_{16} servicing capability has been established during the power-on cycle.

(3). Bit **66** (bit **34** of the **"MB"** field) set to **"1"** to indicate that Register 17_{16} servicing capability has been established during the power-on cycle.

f. **Mode S Specific Services GICB Capability, Register 19_{16}:** (§2.2.25.3)

Within **FIVE** (5) seconds of the interrogation/reply sequence in Part 7.c., interrogate the transponder with the following GICB Extraction interrogation in order to extract the Register 19_{16} Mode S Specific Services GICB Capability:

REGISTER 19_{16} MODE S SPECIFIC SERVICES CAPABILITY GICB EXTRACTION EXTENDED DATA SOURCE INTERROGATION SETUP									
1 ---- 5	6 ---- 8	9 --- 13	14-16	17 -- 20	21 -- 24	25	26	27—28	29 --- 32
				"SD"					
"UF" =	**"PC" =**	**"RR" =**	**"DI" =**	**"IIS" =**	**"RRS =**	**"X" =**	**"LOS" =**	**"XX" =**	**"TMS" =**
4	0	**17** (11 HEX)	**7**	0	**9**	0	0	0	0

Verify that the transponder replies with a "**DF**" = **20** reply with:

(1). Bit **80** (bit **49** of the **"MB"** field) set to "**1**" to indicate that Register 40_{16} servicing capability has been established during the power-on cycle.

(2). Bit **50** (bit **18** of the **"MB"** field) set to **"1"** to indicate that Register $5F_{16}$ servicing capability has been established during the power-on cycle.

g. **Broadcast Extraction, Register 10_{16}:** (§2.2.25.1 and 2.2.25.2.3)

Within less than **15** seconds after starting the Test Timer in Part 7.b.(2), e.g., the "B" Timer monitor, interrogate the transponder with the following Comm-B Extraction interrogations in order to extract the Comm-B broadcast message which should be the Data Link Capability Report contained in Register 10_{16}.

COMM-B BROADCAST EXTRACTION INTERROGATION SETUP									
1 ---- 5	6 ---- 8	9 --- 13	14-16	17 -- 20	21 -- 24	25	26	27—28	29 --- 32
				"SD"					
"UF" =	**"PC" =**	**"RR" =**	**"DI" =**	**"IIS" =**	**"RRS =**	**"X" =**	**"LOS" =**	**"XX" =**	**"TMS" =**
4	0	**16** (10 HEX)	**7**	0	**0**	0	0	0	0

Within **ONE** (1) second of starting the interrogations, verify that the transponder replies with a "DF" = 20 reply with:

Note: *The 1 second is based on the update rate specified for Register 10_{16}.*

(1). "DR" = 4 or 5 if TCAS Information **IS NOT** available

= 6 or 7 if TCAS Information **IS** available.

(2). Bit **33** –through- **40** (bit 1 –through- **8** of the "MB" field) set to 10 HEX (**0001**

0000).

(3). Bit **57** ["Mode S Specific Services Capability" (bit **25** of the "MB" field)] set to ONE (1) to indicate that the transponder has restored Mode S Specific Services Capability.

(4). Bit **65** ["AIS" subfield (bit **33** of the "MB" field)] set to ZERO (0) to indicate that there is NO Aircraft Identification capability,

(5). Bit **67** ["SIC" subfield (bit **35** of the "MB" field)] set to ONE (1) to indicate that the transponder does have "SI" capability.

(6). Bit **68** ["Common Usage GICB Capability Report" (bit **36** of the "MB" field)] set to ONE (1) to indicate that Register 17_{16} has changed as Register 40_{16} data has been restored.

h. **Comm-B Broadcast due to Data Link Capability Change Termination:** (§2.2.25.1 and 2.2.25.2.3)

Continue to interrogate the transponder with the interrogation described in Part 7. g. (e.g., the last step) until the transponder replies with a "DF" = 20 reply with "DR" NOT EQUAL to 4, 5, 6, or 7.

Verify that the elapsed time of the Test Timer started in Part 7.b.(2). is 18 +/- 1 second.

Note: *At this time, the "B" timer started in Part 7.b.(2). as broadcast due to a change in Data Link Capability should have terminated.*

2.7.5.8 PART 8: Register 40_{16} - Selected Vertical Intention - Data Change Validation - Set 7 (§2.2.25 –through- 2.2.25.5)

Repeat ALL of Part 6.

2.7.5.9 PART 9: Register 40_{16} - Selected Vertical Intention - Data Change Validation - Set 6 (§2.2.25 –through- 2.2.25.5)

Notes:

1. *The intent of Part 9 is to demonstrate that servicing of Register 40_{16} can be initiated by insertion of a single parameter, e.g., FMS Selected Altitude data. Part 9 also validates that FMS Selected Altitude Count in Register $5F_{16}$ goes to **"01"** as the count should restart after having had a data termination.*

   RHS_Commentary: *Rewrote Note 1 to place emphasis on starting the register based on a single parameter. Secondary emphasis is placed on servicing Register $5F_{16}$. Previously, the note addressed Register $5F_{16}$ first. Remove this commentary after making change to review copy.*

2. *Review all subparagraphs of Part 9 prior to performing tests. This is necessary to establish the appropriate timing between changing data inputs and interrogations.*

a. **Data Input Initialization:** (§2.2.25.5.1 and 2.2.25.5.2)

(1). Mode Control Panel Selected Altitude: (§2.2.25.5.2.1)

Continue to NOT provide MCP Selected Altitude data as established in Part 8 (e.g., Part 6.a.(1)).

(2). Flight Management System (FMS) Selected Altitude: (§2.2.25.5.2.2)

Via the appropriate FMS (or other) interface, provide the transponder with the following FMS Selected Altitude data at a minimum rate of 5 per second in order to provide appropriate FMS Selected Altitude data.

Flight Management System (FMS) Selected Altitude Input Data				
[See Note 1]		**[See Note 2]**		
Data Value (feet)	**Typical Binary Encoding**	**Rounded Input Data Value (feet)**	**Rounded Input Encoding**	**Knob -in- Motion**
+ 36,669	0__1000 1111 0011 1101	+ 36,672	0__ 1000 1111 0100	NO

Notes:

1. ***Data Input Value*** *and* ***Typical Binary Encoding*** *represent the data as it is provided to the transponder.*

2. ***Rounded Input Data Value*** *and* ***Rounded Input Encoding*** *represent the data as it is expected to be seen in the* ***"MB"*** *field of Register* 40_{16}.

(3). Air Data System (ADS) input of Barometric Pressure Setting: (§2.2.25.5.2.3)

Continue to NOT provide Barometric Pressure Setting data as established in Part 8 (e.g., Part 6.a.(3)).

(4). FMS Vertical Mode Bits: (§2.2.25.5.2.4)

Continue to NOT provide FMS Vertical Mode Bit data as established in Part 8 (e.g., Part 6.a.(4)).

b. **Register 40_{16} Capability Verification**: (§2.2.25.1.4 and 2.2.25.5 –through- 2.2.25.5.3)

Within **ONE** (1) second of providing the transponder with data as detailed in Part 9.a., interrogate the transponder with the following GICB Extraction interrogation in order to extract the Register 40_{16} – Selected Vertical Intention data.

REGISTER 40_{16} SELECTED VERTICAL INTENTION GICB EXTRACTION EXTENDED DATA SOURCE INTERROGATION SETUP									
1 ---- 5	6 ---- 8	9 --- 13	14-16	17 -- 20	21 -- 24	25	26	27—28	29 --- 32
				"SD"					
"UF" =	**"PC" =**	**"RR" =**	**"DI" =**	**"IIS" =**	**"RRS =**	**"X" =**	**"LOS" =**	**"XX" =**	**"TMS" =**
4	0	**20** (14 HEX)	**7**	0	**0**	0	0	0	0

Note: *The interrogation should initiate the "B" timer for* ***18 ±1.0*** *seconds since a*

Comm-B Broadcast is initiated because servicing of Register $5F_{16}$ capability has changed. Note that the update to Register $5F_{16}$ may take up to one minute to change the "DR" Field to declare the broadcast.

RHS_Commentary: *Added second sentence to emphasize that 5F update takes up to a second. Remove this commentary after making change to review copy.*

(1). Verify that the transponder replies with a **"DF" = 20** reply.

(2). During replies to this interrogation sequence and subsequent interrogations during this test procedure, monitor the **"DR"** field. If the **"DR"** field changes to **4, 5, 6**, or **7**, then the transponder has initiated a Comm-B Broadcast.

When the **"DR"** field changes, start a Test Timer to monitor that the **"B"**-Timer runs for **18 ±1.0** seconds.

"DR" = 4 or 5 if TCAS Information IS NOT available

= 6 or 7 if TCAS Information IS available.

(3). Verify that the **DF=20** reply **"MB"** field provides Selected Vertical Intention Data with:

Part 9.b. DF = 20, Selected Vertical Intention "MB" Field														
Reply Bits:	33	34 ---------- 45	46	47 ---------- 58	59	60 ---------- 71	72 ---- 79	80	81	82	83	84- 85	86	87 -- 88
"MB" Bits:	1	2 ---------- 13	14	15 ---------- 26	27	28 ---------- 39	40 --- 47	48	49	50	51	52 - 53	54	55 -- 56
Field:	**Selected Altitude**		**FMS Selected Altitude**		**Baro. Pressure Setting**		**RSVD**	**MCP**	**VNAV**	**A-HLD**	**APP**	**RSVD**	**Target**	**Target**
	Status	Data	Status	Data	Status	Data		Mode	Mode	Mode	Mode		Status	SRC
Data:	0	0000 0000 0000	1	1000 1111 0100	0	0000 0000 0000	00000000	0	0	0	0	00	0	00

c. **Quasi-Static Parameter Monitoring, Register $5F_{16}$:** (§2.2.25.7)

Within **0.5** seconds of completing the reply acceptance in Part 9.b., interrogate the transponder with the following GICB Extraction interrogation in order to extract the Register $5F_{16}$ Quasi-Static Parameter Monitoring Capability:

REGISTER $5F_{16}$ QUASI-STATIC PARAMETER MONITORING GICB EXTRACTION EXTENDED DATA SOURCE INTERROGATION SETUP									
1 ---- 5	6 ---- 8	9 --- 13	14-16	17 -- 20	21 -- 24	25	26	27—28	29 --- 32
				"SD"					
"UF" =	**"PC" =**	**"RR" =**	**"DI" =**	**"IIS" =**	**"RRS =**	**"X" =**	**"LOS" =**	**"XX" =**	**"TMS" =**
4	0	**21** (15 HEX)	**7**	0	**F**	0	0	0	0

Verify that the transponder replies with a "**DF**" = **20** reply with:

(1). Bits **33** and **34** (bits **1** and **2** of the **"MB"** field) are set to "**00**" respectively to indicate that the Selected Altitude parameter in Register 40_{16} has changed as data input has been terminated.

(2). Bits **55** and **56** (bits **23** and **24** of the **"MB"** field) are set to **"01"** respectively to indicate that the FMS Selected Altitude parameter in Register 40_{16} has changed as data input was restarted after having been terminated.

(3). Bits **57** and **58** (bits **25** and **26** of the **"MB"** field) are set to **"00"** respectively to indicate that the Barometric Pressure Setting parameter in Register 40_{16} has changed as data input has been terminated.

(4). Bits **49** and **50** (bits **17** and **18** of the **"MB"** field) are set to **"00"** respectively to indicate that the FMS Vertical Mode Bits in Register 40_{16} have changed as data input has been terminated.

d. **Common Usage GICB Capability Report, Register 17_{16}:** (§2.2.25.2)

Within **FIVE** (5) seconds of the interrogation/reply sequence in Part 9.c., interrogate the transponder with the following GICB Extraction interrogation in order to extract the Register 17_{16} Common Usage GICB Capability Report:

REGISTER 17_{16} COMMON USAGE GICB CAPABILITY GICB EXTRACTION EXTENDED DATA SOURCE INTERROGATION SETUP									
1 ---- 5	6 ---- 8	9 --- 13	14-16	17 -- 20	21 -- 24	25	26	27—28	29 --- 32
				"SD"					
"UF" =	**"PC" =**	**"RR" =**	**"DI" =**	**"IIS" =**	**"RRS =**	**"X" =**	**"LOS" =**	**"XX" =**	**"TMS" =**
4	0	**17** (11 HEX)	**7**	0	**7**	0	0	0	0

Verify that the transponder replies with a "**DF**" = **20** reply with:

(1). Bit **41** (bit **9** of the **"MB"** field) set to "**1**" to indicate that Register 40_{16} servicing capability has been established as new data has been provided.

(2). Bit **55** (bit **23** of the **"MB"** field) set to **"1"** to indicate that Register $5F_{16}$ servicing capability has been established and that data is valid.

e. **Mode S Specific Services GICB Capability, Register 18_{16}:** (§2.2.25.3)

Within **FIVE** (5) seconds of the interrogation/reply sequence in Part 9.c., Interrogate the transponder with the following GICB Extraction interrogation in order to extract the Register 18_{16} Mode S Specific Services GICB Capability:

REGISTER 18_{16} MODE S SPECIFIC SERVICES CAPABILITY GICB EXTRACTION EXTENDED DATA SOURCE INTERROGATION SETUP									
1 ---- 5	6 ---- 8	9 --- 13	14-16	17 -- 20	21 -- 24	25	26	27—28	29 --- 32
				"SD"					
"UF" =	**"PC" =**	**"RR" =**	**"DI" =**	**"IIS" =**	**"RRS =**	**"X" =**	**"LOS" =**	**"XX" =**	**"TMS" =**
4	0	**17** (11 HEX)	**7**	0	**8**	0	0	0	0

Verify that the transponder replies with a "**DF**" = **20** reply with:

(1). Bit **64** (bit **32** of the **"MB"** field) set to "**1**" to indicate that Register 19_{16} servicing capability has been established during the power-on cycle.

(2). Bit **65** (bit **33** of the **"MB"** field) set to **"1"** to indicate that Register 18_{16} servicing capability has been established during the power-on cycle.

(3). Bit **66** (bit **34** of the **"MB"** field) set to **"1"** to indicate that Register 17_{16} servicing capability has been established during the power-on cycle.

f. **Mode S Specific Services GICB Capability, Register 19_{16}:** (§2.2.25.3)

Within **FIVE** (5) seconds of the interrogation/reply sequence in Part 9.c., interrogate the transponder with the following GICB Extraction interrogation in order to extract the Register 19_{16} Mode S Specific Services GICB Capability:

REGISTER 19_{16} MODE S SPECIFIC SERVICES CAPABILITY GICB EXTRACTION EXTENDED DATA SOURCE INTERROGATION SETUP									
1 ---- 5	6 ---- 8	9 --- 13	14-16	17 -- 20	21 -- 24	25	26	27—28	29 --- 32
				"SD"					
"UF" =	**"PC" =**	**"RR" =**	**"DI" =**	**"IIS" =**	**"RRS =**	**"X" =**	**"LOS" =**	**"XX" =**	**"TMS" =**
4	0	**17** (11 HEX)	**7**	0	**9**	0	0	0	0

Verify that the transponder replies with a "**DF**" = **20** reply with:

(1). Bit **80** (bit **49** of the **"MB"** field) set to "**1**" to indicate that Register 40_{16} servicing capability has been established during the power-on cycle.

(2). Bit **50** (bit **18** of the **"MB"** field) set to **"1"** to indicate that Register $5F_{16}$ servicing capability has been established during the power-on cycle.

g. **Broadcast Extraction, Register 10_{16}:** (§2.2.25.1 and 2.2.25.2.3)

Within less than **15** seconds after starting the Test Timer in Part 9.b.(2), e.g., the "B" Timer monitor, interrogate the transponder with the following Comm-B Extraction interrogations in order to extract the Comm-B broadcast message which should be the Data Link Capability Report contained in Register 10_{16}.

COMM-B BROADCAST EXTRACTION INTERROGATION SETUP									
1 ---- 5	6 ---- 8	9 --- 13	14-16	17 -- 20	21 -- 24	25	26	27—28	29 --- 32
				"SD"					
"UF" =	**"PC" =**	**"RR" =**	**"DI" =**	**"IIS" =**	**"RRS =**	**"X" =**	**"LOS" =**	**"XX" =**	**"TMS" =**
4	0	**16** (10 HEX)	**7**	0	**0**	0	0	0	0

Within **ONE** (1) second of starting the interrogations, verify that the transponder replies with a "DF" = 20 reply with:

Note: *The 1 second is based on the update rate specified for Register 10_{16}.*

(1). "DR" = 4 or 5 if TCAS Information **IS NOT** available

= 6 or 7 if TCAS Information **IS** available.

(2). Bit **33** –through- **40** (bit 1 –through- **8** of the "MB" field) set to 10 HEX (**0001 0000**).

(3). Bit **57** ["Mode S Specific Services Capability" (bit **25** of the "MB" field)] set to ONE (1) to indicate that the transponder has restored Mode S Specific Services Capability.

(4). Bit **65** ["AIS" subfield (bit **33** of the "MB" field)] set to ZERO (0) to indicate that there is NO Aircraft Identification capability,

(5). Bit **67** ["SIC" subfield (bit **35** of the "MB" field)] set to ONE (1) to indicate that the transponder does have "SI" capability.

(6). Bit **68** ["Common Usage GICB Capability Report" (bit **36** of the "MB" field)] set to ONE (1) to indicate that Register 17_{16} has changed as Register 40_{16} data has been restored.

h. **Comm-B Broadcast due to Data Link Capability Change Termination:** (§2.2.25.1 and 2.2.25.2.3)

Continue to interrogate the transponder with the interrogation described in Part 9. g. (e.g., the last step) until the transponder replies with a "DF" = 20 reply with "DR" NOT EQUAL to 4, 5, 6, or 7.

Verify that the elapsed time of the Test Timer started in Part 9.b.(2). is 18 +/- 1 second.

Note: *At this time, the "B" timer started in Part 9.b.(2). as broadcast due to a change in Data Link Capability should have terminated.*

2.7.5.10 PART 10: Register 40_{16} - Selected Vertical Intention - Data Change Validation - Set 9 (§2.2.25 –through- 2.2.25.5)

Repeat ALL of Part 6.

2.7.5.11 PART 11: Register 40_{16} - Selected Vertical Intention - Data Change Validation - Set 10 (§2.2.25 –through- 2.2.25.5)

Notes:

*1. The intent of Part 11 is to demonstrate that servicing of Register 40_{16} can be initiated by insertion of a single parameter, e.g., Barometric Pressure Setting data. Part 11 also validates that the Barometric Pressure Setting Count in Register $5F_{16}$ goes to **"01"** as the count should restart after having had a data termination.*

RHS_Commentary: *Rewrote Note 1 to place emphasis on starting the register based on a single parameter. Secondary emphasis is placed on servicing Register $5F_{16}$. Previously, the note addressed*

Register $5F_{16}$ first. Remove this commentary after making change to review copy.

2. *Review all subparagraphs of Part 11 prior to performing tests. This is necessary to establish the appropriate timing between changing data inputs and interrogations.*

a. **Data Input Initialization:** (§2.2.25.5.1 and 2.2.25.5.2)

(1). Mode Control Panel Selected Altitude: (§2.2.25.5.2.1)

Continue to NOT provide MCP Selected Altitude data as established in Part 10 (e.g., Part 6.a.(1)).

(2). Flight Management System (FMS) Selected Altitude: (§2.2.25.5.2.2)

Continue to NOT provide FMS Selected Altitude data as established in Part 10 (e.g., Part 6.a.(2)).

(3). Air Data System (ADS) input of Barometric Pressure Setting: (§2.2.25.5.2.3)

Via the appropriate ADS (or other) interface, provide the transponder with the following Barometric Pressure Setting data at a minimum rate of 5 per second in order to provide appropriate Barometric Pressure Setting data.

Air Data System (ADS) Barometric Pressure Setting Input Data		
[See Note 1]		**[See Note 2]**
Data Value (millibars)	**Typical Binary Coded Decimal (BCD) Encoding**	**Input Encoding**
+ 942.7	000 1001 0100 0010 0111	0101 1001 0011

Notes:

1. ***Data Input Value*** *and* ***Typical Binary Coded Decimal (BCD) Encoding*** *represent the data as it is provided to the transponder.*

2. ***Input Encoding*** *represent the data as it is expected to be seen in the* ***"MB"*** *field of Register 40_{16}.*

Barometric Correction Encoding Derivation

9427/2	=	4713	_	1	73/2	=	36	_	1	0010 0100 1101 0011	Hex	==	24D3 Hex	==	9427 Decimal
4713/2	=	2356	_	1	36/2	=	18	_	0	1110 0000 1100 0000	Hex	==	E0C0 Hex	==	-8000 millibars
2356/2	=	1178	_	0	18/2	=	9	_	0	0000 0101 1001 0011	Hex	==	0593 Hex	==	1427 Decimal
1178/2	=	589	_	0	9/2	=	4	_	1						
589/2	=	294	_	1	4/2	=	2	_	0	**Map Bits 28 through 40 of Register 40_{16} as:**			**0101 1001 0011**		
294/2	=	147	_	0	2/2	=	1	_	0						
147/2	=	73	_	1	1/2	=	0	_	1						

(4). FMS Vertical Mode Bits: (§2.2.25.5.2.4)

Continue to NOT provide FMS Vertical Mode Bit data as established in Part 10 (e.g., Part 6.a.(4)).

b. **Register 40_{16} Capability Verification**: (§2.2.25.1.4 and 2.2.25.5 –through- 2.2.25.5.3)

Within **ONE** (1) second of providing the transponder with data as detailed in Part 11.a., interrogate the transponder with the following GICB Extraction interrogation in order to extract the Register 40_{16} – Selected Vertical Intention data.

REGISTER 40_{16} SELECTED VERTICAL INTENTION GICB EXTRACTION EXTENDED DATA SOURCE INTERROGATION SETUP									
1 ---- 5	6 ---- 8	9 --- 13	14-16	17 -- 20	21 -- 24	25	26	27—28	29 --- 32
				"SD"					
"UF" =	**"PC" =**	**"RR" =**	**"DI" =**	**"IIS" =**	**"RRS =**	**"X" =**	**"LOS" =**	**"XX" =**	**"TMS" =**
4	0	**20** (14 HEX)	**7**	0	**0**	0	0	0	0

Note: *The interrogation should initiate the "B" timer for **18 ±1.0** seconds since a Comm-B Broadcast is initiated because servicing of Register $5F_{16}$ capability has changed. Note that the update to Register $5F_{16}$ may take up to one minute to change the "DR" Field to declare the broadcast.*

RHS Commentary: *Added second sentence to emphasize that 5F update takes up to a second. Remove this commentary after making change to review copy.*

(1). Verify that the transponder replies with a **"DF" = 20** reply.

(2). During replies to this interrogation sequence and subsequent interrogations during this test procedure, monitor the **"DR"** field. If the **"DR"** field changes to **4, 5, 6**, or **7**, then the transponder has initiated a Comm-B Broadcast.

When the **"DR"** field changes, start a Test Timer to monitor that the **"B"**-Timer runs for **18 ±1.0** seconds.

"DR" = 4 or 5 if TCAS Information IS NOT available

= 6 or 7 if TCAS Information IS available.

(3). Verify that the **DF=20** reply **"MB"** field provides Selected Vertical Intention Data with:

Part 11.b. DF = 20, Selected Vertical Intention "MB" Field															
Reply Bits:	33	34 ---------- 45	46	47 ---------- 58	59	60 ---------- 71	72 ---- 79	80	81	82	83	84- 85	86	87 -- 88
"MB" Bits:	1	2 ---------- 13	14	15 ---------- 26	27	28 ---------- 39	40 --- 47	48	49	50	51	52 - 53	54	55 -- 56
Field:	**Selected Altitude**		**FMS Selected Altitude**		**Baro. Pressure Setting**		**RSVD**	**MCP**	**VNAV**	**A-HLD**	**APP**	**RSVD**	**Target**	**Target**
	Status	Data	Status	Data	Status	Data		Mode	Mode	Mode	Mode		Status	SRC
Data:	0	0000 0000 0000	0	0000 0000 0000	1	0101 1001 0011	00000000	0	0	0	0	00	0	00

c. **Quasi-Static Parameter Monitoring, Register $5F_{16}$:** (§2.2.25.7)

Within **0.5** seconds of completing the reply acceptance in Part 11.b., interrogate the transponder with the following GICB Extraction interrogation in order to extract the Register $5F_{16}$ Quasi-Static Parameter Monitoring Capability:

REGISTER $5F_{16}$ QUASI-STATIC PARAMETER MONITORING GICB EXTRACTION EXTENDED DATA SOURCE INTERROGATION SETUP									
1 ---- 5	6 ---- 8	9 --- 13	14-16	17 -- 20	21 -- 24	25	26	27—28	29 --- 32
				"SD"					
"UF" =	**"PC" =**	**"RR" =**	**"DI" =**	**"IIS" =**	**"RRS =**	**"X" =**	**"LOS" =**	**"XX" =**	**"TMS" =**
4	0	**21** (15 HEX)	**7**	0	**F**	0	0	0	0

Verify that the transponder replies with a "**DF**" = **20** reply with:

(1). Bits **33** and **34** (bits **1** and **2** of the **"MB"** field) are set to "**00**" respectively to indicate that the Selected Altitude parameter in Register 40_{16} has changed as data input has been terminated.

(2). Bits **55** and **56** (bits **23** and **24** of the **"MB"** field) are set to **"00"** respectively to indicate that the FMS Selected Altitude parameter in Register 40_{16} has changed as data input has been terminated.

(3). Bits **57** and **58** (bits **25** and **26** of the **"MB"** field) are set to **"01"** respectively to indicate that the Barometric Pressure Setting parameter in Register 40_{16} has changed as data input was restarted after having been terminated.

(4). Bits **49** and **50** (bits **17** and **18** of the **"MB"** field) are set to **"00"** respectively to indicate that the FMS Vertical Mode Bits in Register 40_{16} have changed as data input has been terminated.

d. **Common Usage GICB Capability Report, Register 17_{16}:** (§2.2.25.2)

Within **FIVE** (5) seconds of the interrogation/reply sequence in Part 11.c., interrogate the transponder with the following GICB Extraction interrogation in order to extract the Register 17_{16} Common Usage GICB Capability Report:

REGISTER 17_{16} COMMON USAGE GICB CAPABILITY GICB EXTRACTION EXTENDED DATA SOURCE INTERROGATION SETUP									
1 ---- 5	6 ---- 8	9 --- 13	14-16	17 -- 20	21 -- 24	25	26	27—28	29 --- 32
				"SD"					
"UF" =	**"PC" =**	**"RR" =**	**"DI" =**	**"IIS" =**	**"RRS =**	**"X" =**	**"LOS" =**	**"XX" =**	**"TMS" =**
4	0	**17** (11 HEX)	**7**	0	**7**	0	0	0	0

Verify that the transponder replies with a "**DF**" = **20** reply with:

(1). Bit **41** (bit **9** of the **"MB"** field) set to "**1**" to indicate that Register 40_{16} servicing capability has been established as new data has been provided.

(2). Bit **55** (bit **23** of the **"MB"** field) set to **"1"** to indicate that Register $5F_{16}$ servicing capability has been established and that data is valid.

e. **Mode S Specific Services GICB Capability, Register 18_{16}:** (§2.2.25.3)

Within **FIVE** (5) seconds of the interrogation/reply sequence in Part 11.c., Interrogate the transponder with the following GICB Extraction interrogation in order to extract the Register 18_{16} Mode S Specific Services GICB Capability:

REGISTER 18_{16} MODE S SPECIFIC SERVICES CAPABILITY GICB EXTRACTION EXTENDED DATA SOURCE INTERROGATION SETUP									
1 ---- 5	6 ---- 8	9 --- 13	14-16	17 -- 20	21 -- 24	25	26	27—28	29 --- 32
				"SD"					
"UF" =	**"PC" =**	**"RR" =**	**"DI" =**	**"IIS" =**	**"RRS =**	**"X" =**	**"LOS" =**	**"XX" =**	**"TMS" =**
4	0	**17** (11 HEX)	**7**	0	**8**	0	0	0	0

Verify that the transponder replies with a "**DF**" = **20** reply with:

(1). Bit **64** (bit **32** of the **"MB"** field) set to "**1**" to indicate that Register 19_{16} servicing capability has been established during the power-on cycle.

(2). Bit **65** (bit **33** of the **"MB"** field) set to **"1"** to indicate that Register 18_{16} servicing capability has been established during the power-on cycle.

(3). Bit **66** (bit **34** of the **"MB"** field) set to **"1"** to indicate that Register 17_{16} servicing capability has been established during the power-on cycle.

f. **Mode S Specific Services GICB Capability, Register 19_{16}:** (§2.2.25.3)

Within **FIVE** (5) seconds of the interrogation/reply sequence in Part 11.c., interrogate the transponder with the following GICB Extraction interrogation in order to extract the Register 19_{16} Mode S Specific Services GICB Capability:

REGISTER 19_{16} MODE S SPECIFIC SERVICES CAPABILITY GICB EXTRACTION EXTENDED DATA SOURCE INTERROGATION SETUP									
1 ---- 5	6 ---- 8	9 --- 13	14-16	17 -- 20	21 -- 24	25	26	27—28	29 --- 32
				"SD"					
"UF" =	**"PC" =**	**"RR" =**	**"DI" =**	**"IIS" =**	**"RRS =**	**"X" =**	**"LOS" =**	**"XX" =**	**"TMS" =**
4	0	**17** (11 HEX)	**7**	0	**9**	0	0	0	0

Verify that the transponder replies with a "**DF**" = **20** reply with:

(1). Bit **80** (bit **49** of the **"MB"** field) set to "**1**" to indicate that Register 40_{16} servicing capability has been established during the power-on cycle.

(2). Bit **50** (bit **18** of the **"MB"** field) set to **"1"** to indicate that Register $5F_{16}$ servicing capability has been established during the power-on cycle.

g. **Broadcast Extraction, Register 10_{16}:** (§2.2.25.1 and 2.2.25.2.3)

Within less than **15** seconds after starting the Test Timer in Part 11.b.(2), e.g., the "B" Timer monitor, interrogate the transponder with the following Comm-B Extraction interrogations in order to extract the Comm-B broadcast message which should be the Data Link Capability Report contained in Register 10_{16}.

COMM-B BROADCAST EXTRACTION INTERROGATION SETUP									
1 ---- 5	6 ---- 8	9 --- 13	14-16	17 -- 20	21 -- 24	25	26	27—28	29 --- 32
				"SD"					
"UF" =	**"PC" =**	**"RR" =**	**"DI" =**	**"IIS" =**	**"RRS =**	**"X" =**	**"LOS" =**	**"XX" =**	**"TMS" =**
4	0	**16** (10 HEX)	**7**	0	**0**	0	0	0	0

Within **ONE** (1) second of starting the interrogations, verify that the transponder replies with a "DF" = 20 reply with:

Note: *The 1 second is based on the update rate specified for Register 10_{16}.*

(1). "DR" = 4 or 5 if TCAS Information **IS NOT** available

= 6 or 7 if TCAS Information **IS** available.

(2). Bit **33** –through- **40** (bit 1 –through- **8** of the "MB" field) set to 10 HEX (**0001 0000**).

(3). Bit **57** ["Mode S Specific Services Capability" (bit **25** of the "MB" field)] set to ONE (1) to indicate that the transponder has restored Mode S Specific Services Capability.

(4). Bit **65** ["AIS" subfield (bit **33** of the "MB" field)] set to ZERO (0) to indicate that there is NO Aircraft Identification capability,

(5). Bit **67** ["SIC" subfield (bit **35** of the "MB" field)] set to ONE (1) to indicate that the transponder does have "SI" capability.

(6). Bit **68** ["Common Usage GICB Capability Report" (bit **36** of the "MB" field)] set to ONE (1) to indicate that Register 17_{16} has changed as Register 40_{16} data has been restored.

h. **Comm-B Broadcast due to Data Link Capability Change Termination:** (§2.2.25.1 and 2.2.25.2.3)

Continue to interrogate the transponder with the interrogation described in Part 11. g. (e.g., the last step) until the transponder replies with a "DF" = 20 reply with "DR" NOT EQUAL to 4, 5, 6, or 7.

Verify that the elapsed time of the Test Timer started in Part 11.b.(2). is 18 +/- 1 second.

Note: *At this time, the "B" timer started in Part 11.b.(2). as broadcast due to a change in Data Link Capability should have terminated.*

2.7.5.12 PART 12: Register 40_{16} - Selected Vertical Intention - Data Change Validation - Set 11 (§2.2.25 –through- 2.2.25.5)

Repeat ALL of Part 6.

2.7.5.13 PART 13: Register 40_{16} - Selected Vertical Intention - Data Change Validation - Set 12 (§2.2.25 –through- 2.2.25.5)

Notes:

1. *The intent of Part 13 is to demonstrate that servicing of Register 40_{16} can also be initiated by insertion of a single parameter, e.g., FMS Vertical Mode Bit data. Part 13 also validates that the FMS Vertical Mode Count in Register $5F_{16}$ goes to **"01"** as the count should restart after having had a data termination.*

   RHS_Commentary: *Rewrote Note 1 to place emphasis on starting the register based on a single parameter. Secondary emphasis is placed on servicing Register $5F_{16}$. Previously, the note addressed Register $5F_{16}$ first. Remove this commentary after making change to review copy.*

2. *Review all subparagraphs of Part 13 prior to performing tests. This is necessary to establish the appropriate timing between changing data inputs and interrogations.*

a. **Data Input Initialization:** (§2.2.25.5.1 and 2.2.25.5.2)

(1). Mode Control Panel Selected Altitude: (§2.2.25.5.2.1)

Continue to NOT provide MCP Selected Altitude data as established in Part 12 (e.g., Part 6.a.(2)).

(2). Flight Management System (FMS) Selected Altitude: (§2.2.25.5.2.2)

Continue to NOT provide FMS Selected Altitude data as established in Part 12 (e.g., Part 6.a.(3)).

(3). Air Data System (ADS) input of Barometric Pressure Setting: (§2.2.25.5.2.3)

Continue to NOT provide Barometric Pressure Setting data as established in Part 12 (e.g., Part 6.a.(3)).

(4). FMS Vertical Mode Bits: (§2.2.25.5.2.4)

Via the appropriate interface, provide the transponder with appropriate information with which to set the FMS Vertical Mode Bits as indicated in the following table:

FMS Vertical Mode Bits Input Data				
FMS Vertical Mode Bits	**Status of MCP / FCU Mode Bits**	**VNAV Mode**	**Altitude Hold Mode**	**Approach Mode**
Register 40_{16} "MB" Field Bit	**48**	**49**	**50**	**51**
Input Bit or State Setting (See Note 1)	1	0	1	0

Notes:

1. *For bit **48**, **"0"** indicates that no mode information is being provided with which to set bits **49** through **51**, and **"1"** indicates that mode information is being provided with which to set bits **49** through **51**. For bits **49** through **51**, **"0"** indicates that the mode is "Not Active", and **"1"** indicates that the mode is "Active".*
2. *When **No** FMS Vertical Mode Bit information is provided to the transponder, it is expected that bits **48** through **51** will be set to **"0"**.*

b. **Register 40_{16} Capability Verification**: (§2.2.25.1.4 and 2.2.25.5 –through- 2.2.25.5.3)

Within ONE (1) second of providing the transponder with data as detailed in Part 13.a., interrogate the transponder with the following GICB Extraction interrogation in order to extract the Register 40_{16} - Selected Vertical Intention data.

REGISTER 40_{16} SELECTED VERTICAL INTENTION GICB EXTRACTION EXTENDED DATA SOURCE INTERROGATION SETUP									
1 ---- 5	6 ---- 8	9 --- 13	14-16	17 -- 20	21 -- 24	25	26	27—28	29 --- 32
				"SD"					
"UF" =	**"PC" =**	**"RR" =**	**"DI" =**	**"IIS" =**	**"RRS =**	**"X" =**	**"LOS" =**	**"XX" =**	**"TMS" =**
4	0	**20** (14 HEX)	**7**	0	**0**	0	0	0	0

Note: *The interrogation should initiate the "B" timer for **18 ±1.0** seconds since a Comm-B Broadcast is initiated because servicing of Register $5F_{16}$ capability has changed. Note that the update to Register $5F_{16}$ may take up to one minute to change the "DR" Field to declare the broadcast.*

RHS Commentary: *Added second sentence to emphasize that 5F update takes up to a second. Remove this commentary after making change to review copy.*

(1). Verify that the transponder replies with a **"DF" = 20** reply.

(2). During replies to this interrogation sequence and subsequent interrogations during this test procedure, monitor the **"DR"** field. If the **"DR"** field changes to **4, 5, 6**, or **7**, then the transponder has initiated a Comm-B Broadcast.

When the **"DR"** field changes, start a Test Timer to monitor that the **"B"**-Timer runs for **18 ±1.0** seconds.

"DR" = 4 or 5 if TCAS Information IS NOT available

= 6 or 7 if TCAS Information IS available.

(3). Verify that the **DF=20** reply **"MB"** field provides Selected Vertical Intention Data with:

Part 13.b. DF = 20, Selected Vertical Intention "MB" Field															
Reply Bits:	33	34 ---------- 45	46	47 ---------- 58	59	60 ---------- 71	72 ---- 79	80	81	82	83	84- 85	86	87 -- 88
"MB" Bits:	1	2 ---------- 13	14	15 ---------- 26	27	28 ---------- 39	40 --- 47	48	49	50	51	52 - 53	54	55 -- 56
Field:	**Selected Altitude**		**FMS Selected Altitude**		**Baro. Pressure Setting**		**RSVD**	**MCP**	**VNAV**	**A-HLD**	**APP**	**RSVD**	**Target**	**Target**
	Status	Data	Status	Data	Status	Data		Mode	Mode	Mode	Mode		Status	SRC
Data:	0	0000 0000 0000	0	0000 0000 0000	0	0000 0000 0000	00000000	1	0	1	0	00	0	00

c. **<u>Quasi-Static Parameter Monitoring, Register $5F_{16}$:</u>** (§2.2.25.7)

Within **0.5** seconds of completing the reply acceptance in Part 13.b., interrogate the transponder with the following GICB Extraction interrogation in order to extract the Register $5F_{16}$ Quasi-Static Parameter Monitoring Capability:

REGISTER $5F_{16}$ QUASI-STATIC PARAMETER MONITORING GICB EXTRACTION EXTENDED DATA SOURCE INTERROGATION SETUP									
1 ---- 5	6 ---- 8	9 --- 13	14-16	17 -- 20	21 -- 24	25	26	27—28	29 --- 32
				"SD"					
"UF" =	**"PC" =**	**"RR" =**	**"DI" =**	**"IIS" =**	**"RRS =**	**"X" =**	**"LOS" =**	**"XX" =**	**"TMS" =**
4	0	**21** (15 HEX)	**7**	0	**F**	0	0	0	0

Verify that the transponder replies with a "**DF**" = **20** reply with:

(1). Bits **33** and **34** (bits **1** and **2** of the **"MB"** field) are set to "**00**" respectively to indicate that the Selected Altitude parameter in Register 40_{16} has changed as data input has been terminated.

(2). Bits **55** and **56** (bits **23** and **24** of the **"MB"** field) are set to **"00"** respectively to indicate that the FMS Selected Altitude parameter in Register 40_{16} has changed as data input has been terminated.

(3). Bits **57** and **58** (bits **25** and **26** of the **"MB"** field) are set to **"00"** respectively to indicate that the Barometric Pressure Setting parameter in Register 40_{16} has changed as data input has been terminated.

(4). Bits **49** and **50** (bits **17** and **18** of the **"MB"** field) are set to **"01"** respectively to indicate that the FMS Vertical Mode Bits in Register 40_{16} have changed as data input was restarted after having been terminated.

d. **<u>Common Usage GICB Capability Report, Register 17_{16}:</u>** (§2.2.25.2)

Within **FIVE** (5) seconds of the interrogation/reply sequence in Part 13.c., interrogate the transponder with the following GICB Extraction interrogation in order to extract the Register 17_{16} Common Usage GICB Capability Report:

REGISTER 17_{16} COMMON USAGE GICB CAPABILITY GICB EXTRACTION EXTENDED DATA SOURCE INTERROGATION SETUP									
1 ---- 5	6 ---- 8	9 --- 13	14-16	17 -- 20	21 -- 24	25	26	27—28	29 --- 32
				"SD"					
"UF" =	**"PC" =**	**"RR" =**	**"DI" =**	**"IIS" =**	**"RRS =**	**"X" =**	**"LOS" =**	**"XX" =**	**"TMS" =**
4	0	**17** (11 HEX)	**7**	0	**7**	0	0	0	0

Verify that the transponder replies with a "**DF**" = **20** reply with:

(1). Bit **41** (bit **9** of the **"MB"** field) set to "**1**" to indicate that Register 40_{16} servicing capability has been established as new data has been provided.

(2). Bit **55** (bit **23** of the **"MB"** field) set to **"1"** to indicate that Register $5F_{16}$ servicing capability has been established and that data is valid.

e. **Mode S Specific Services GICB Capability, Register 19_{16}:** (§2.2.25.3)

Within **FIVE** (5) seconds of the interrogation/reply sequence in Part 13.c., interrogate the transponder with the following GICB Extraction interrogation in order to extract the Register 19_{16} Mode S Specific Services GICB Capability:

REGISTER 19_{16} MODE S SPECIFIC SERVICES CAPABILITY GICB EXTRACTION EXTENDED DATA SOURCE INTERROGATION SETUP									
1 ---- 5	6 ---- 8	9 --- 13	14-16	17 -- 20	21 -- 24	25	26	27—28	29 --- 32
				"SD"					
"UF" =	**"PC" =**	**"RR" =**	**"DI" =**	**"IIS" =**	**"RRS =**	**"X" =**	**"LOS" =**	**"XX" =**	**"TMS" =**
4	0	**17** (11 HEX)	**7**	0	**9**	0	0	0	0

Verify that the transponder replies with a "**DF**" = **20** reply with:

(1). Bit **80** (bit **49** of the **"MB"** field) set to "**1**" to indicate that Register 40_{16} servicing capability has been established during the power-on cycle.

(2). Bit **50** (bit **18** of the **"MB"** field) set to **"1"** to indicate that Register $5F_{16}$ servicing capability has been established during the power-on cycle.

f. **Mode S Specific Services GICB Capability, Register 18_{16}:** (§2.2.25.3)

Within **FIVE** (5) seconds of the interrogation/reply sequence in Part 13.c., Interrogate the transponder with the following GICB Extraction interrogation in order to extract the Register 18_{16} Mode S Specific Services GICB Capability:

REGISTER 18_{16} MODE S SPECIFIC SERVICES CAPABILITY GICB EXTRACTION EXTENDED DATA SOURCE INTERROGATION SETUP									
1 ---- 5	6 ---- 8	9 --- 13	14-16	17 -- 20	21 -- 24	25	26	27—28	29 --- 32
				"SD"					
"UF" =	**"PC" =**	**"RR" =**	**"DI" =**	**"IIS" =**	**"RRS =**	**"X" =**	**"LOS" =**	**"XX" =**	**"TMS" =**
4	0	**17** (11 HEX)	**7**	0	**8**	0	0	0	0

Verify that the transponder replies with a "**DF**" = **20** reply with:

(1). Bit **64** (bit **32** of the **"MB"** field) set to "**1**" to indicate that Register 19_{16} servicing capability has been established during the power-on cycle.

(2). Bit **65** (bit **33** of the **"MB"** field) set to **"1"** to indicate that Register 18_{16} servicing capability has been established during the power-on cycle.

(3). Bit **66** (bit **34** of the **"MB"** field) set to **"1"** to indicate that Register 17_{16} servicing capability has been established during the power-on cycle.

2.7.5.14 PART 14: Register 40_{16} - Selected Vertical Intention - Data Change Validation - Sets 13 (§2.2.25 –through- 2.2.25.5)

Note: *Review all subparagraphs of Part 14 prior to performing tests. This is necessary to establish the appropriate timing between changing data inputs and interrogations.*

a. **Data Input Initialization:** (§2.2.25.5.1 and 2.2.25.5.2)

(1). Mode Control Panel Selected Altitude: (§2.2.25.5.2.1)

For each line Item # in the following table (Table 14.a(1)), provide the transponder with Mode Control Panel Selected Altitude having a value as indicated in the **"Data Value" (feet)** Column in the table.

Table 14.a(1): Register 40_{16} MCP/FCU Selected Altitude (ARINC label 102)

Item #	Type of Value	Generic MCP/FCU Selected Altitude Input (BNR)		Register 40_{16} MCP/FCU Selected Altitude		
		Status	Data Value (feet)	Status (bit 1)	Decimal Value (feet)	Binary Value (bit 2 ----- 13)
1	Basic	Valid	43,680.00	1	43,680.00	1010 1010 1010
2	Basic	Valid	21,840.00	1	21,840.00	0101 0101 0101
3	Basic	Valid	30,576.00	1	30,576.00	0111 0111 0111
4	Basic	Valid	48,048.00	1	48,048.00	1011 1011 1011
5	Basic	Valid	56,784.00	1	56,784.00	1101 1101 1101
6	Basic	Valid	61,152.00	1	61,152.00	1110 1110 1110
7	Max	Valid	65,530.00	1	65,520.00	1111 1111 1111
8	Min	Valid	0.00	1	0.00	0000 0000 0000
9	Rounded (½ LSB)	Valid	21,864.00	1	21,872.00	0101 0101 0111
10	Rounded (¼ LSB)	Valid	21,844.00	1	21,840.00	0101 0101 0101
11	Invalid	Invalid	43,680.00	0	0.00	0000 0000 0000

(2). Flight Management System (FMS) Selected Altitude: (§2.2.25.5.2.2)

For each line Item # in the following table (Table 14.a(2)), provide the transponder with FMS Selected Altitude having a value as indicated in the **"Data Value" (feet)** Column in the table.

Table 14.a(2): Register 40_{16} FMS Selected Altitude (ARINC label 102)						
Item #	Type of Value	Generic FMS Selected Altitude Input (BNR)		Register 40_{16} FMS Selected Altitude		
		Status	Data Value (feet)	Status (bit 14)	Decimal Value (feet)	Binary Value (bit 15 ----- 26)
1	Basic	Valid	43,680.00	1	43,680.00	1010 1010 1010
2	Basic	Valid	21,840.00	1	21,840.00	0101 0101 0101
3	Basic	Valid	30,576.00	1	30,576.00	0111 0111 0111
4	Basic	Valid	48,048.00	1	48,048.00	1011 1011 1011
5	Basic	Valid	56,784.00	1	56,784.00	1101 1101 1101
6	Basic	Valid	61,152.00	1	61,152.00	1110 1110 1110
7	Max	Valid	65,530.00	1	65,520.00	1111 1111 1111
8	Min	Valid	0.00	1	0.00	0000 0000 0000
9	Rounded (½ LSB)	Valid	21,864.00	1	21,872.00	0101 0101 0111
10	Rounded (¼ LSB)	Valid	21,844.00	1	21,840.00	0101 0101 0101
11	Invalid	Invalid	43,680.00	0	0.00	0000 0000 0000

(3). Air Data System (ADS) input of Barometric Correction: (§2.2.25.5.2.3)

For each line Item # in the following table (Table 14.a(3)), provide the transponder with Barometric Correction data having a value as indicated in the **"Data Value" (+800 millibars)** Column in the table.

Table 14.a(3) : Register 40_{16} Barometric Correction (pressure) (ARINC label 234)						
Item #	Type of Value	ARINC Barometric pressure setting minus 800mb (BCD)		Register 40_{16} Barometric pressure setting minus 800mb		
		Status	Data Value +800 millibars	Status (bit 27)	Decimal Value +800 millibars	Binary Value (bit 28 ----- 39)
1	Basic	Valid	936.50	1	936.50	0101 0101 0101
2	Basic	Valid	991.10	1	991.10	0111 0111 0111
3	Max	Valid	1050	1	1050	1001 1100 0100
4	Min	Valid	800	1	0.00	0000 0000 0000
5	Invalid	Invalid	991.10	0	0.00	0000 0000 0000
6	Baro min	Valid	750	0	0	0000 0000 0000

(4). FMS Vertical Mode Bits: (§2.2.25.5.2.4)

Via the appropriate interface, terminate provision of valid data to the transponder with which to set the FMS Vertical Mode Bits.

Note: *No further test cases need be provided for FMS Vertical Mode Bit settings as sufficient cases have been demonstrated in the previous steps.*

(5). Target Altitude Bits: (§2.2.25.5.2.6)

Via the appropriate interface, terminate provision of valid data to the transponder with which to set the Target Altitude Bits.

Note: *No further test cases need be provided for Target Altitude Bit settings as sufficient cases have been demonstrated in the previous steps.*

b. **Register 40_{16} Verification**: (§2.2.25.1.4 and 2.2.25.5 –through- 2.2.25.5.3)

Within ONE (1) second of providing the transponder with data as detailed for each line Item # in the tables given in Part 14.a., interrogate the transponder with the following GICB Extraction interrogation in order to extract the Register 40_{16} - Selected Vertical Intention data.

REGISTER 40_{16} SELECTED VERTICAL INTENTION GICB EXTRACTION EXTENDED DATA SOURCE INTERROGATION SETUP									
1 ---- 5	6 ---- 8	9 --- 13	14-16	17 -- 20	21 -- 24	25	26	27—28	29 --- 32
				"SD"					
"UF" =	**"PC" =**	**"RR" =**	**"DI" =**	**"IIS" =**	**"RRS =**	**"X" =**	**"LOS" =**	**"XX" =**	**"TMS" =**
4	0	**20** (14 HEX)	**7**	0	**0**	0	0	0	0

RHS_Commentary: ***Remove Note 1 in this case as it is not needed. Remove this commentary after making change in review copy.***

Verify that the transponder replies with a **"DF" = 20** reply with:

(1). For each line Item # in Table 14.a(1) with **"MB"** field Status (bit **1**) equivalent to that shown in the Status (bit **1**) column of Table 14.a(1).

(2). For each line Item # in Table 14.a(1), with **"MB"** field bit **2** through **13** equivalent to that shown in the Binary Value (bit **2** - **13**) column of Table 14.a(1).

(3). For each line Item # in Table 14.a(2) with **"MB"** field Status (bit **14**) equivalent to that shown in the Status (bit **14**) column of Table 14.a(2).

(4). For each line Item # in Table 14.a(2), with **"MB"** field bit **15** through **26** equivalent to that shown in the Binary Value (bit **15** - **26)** column of Table 14.a(2.

(5). For each line Item # in Table 14.a(3) with **"MB"** field Status (bit **27**) equivalent to that shown in the Status (bit **27**) column of Table 14.a(3).

(6). For each line Item # in Table 14.a(3), with **"MB"** field bit **28** through **39** equivalent to that shown in the Binary Value (bit **28** - **39**) column of Table 9.a(3).

Note: *Cumulative results are as shown in the following table.*

Part 14.b. DF = 20, Selected Vertical Intention "MB" Field														
Reply Bits:	33	34 ---------- 45	46	47 ---------- 58	59	60 ---------- 71	72 ---- 79	80	81	82	83	84- 85	86	87 -- 88
"MB" Bits:	1	2 ---------- 13	14	15 ---------- 26	27	28 ---------- 39	40 --- 47	48	49	50	51	52 - 53	54	55 -- 56
Field:	**MCP Selected Altitude**		**FMS Selected Altitude**		**Baro. Pressure Setting**		**RSVD**	**MCP**	**VNAV**	**A-HLD**	**APP**	**RSVD**	**Target**	**Target**
Data: Item #	**Status**	**Data**	**Status**	**Data**	**Status**	**Data**		**Mode**	**Mode**	**Mode**	**Mode**		**Status**	**SRC**
1	1	1010 1010 1010	1	1010 1010 1010	1	0101 0101 0101	00000000	0	0	0	0	00	0	00
2	1	0101 0101 0101	1	0101 0101 0101	1	0111 0111 0111	00000000	0	0	0	0	00	0	00
3	1	0111 0111 0111	1	0111 0111 0111	1	1001 1100 0100	00000000	0	0	0	0	00	0	00
4	1	1011 1011 1011	1	1011 1011 1011	1	0000 0000 0000	00000000	0	0	0	0	00	0	00
5	1	1101 1101 1101	1	1101 1101 1101	0	0000 0000 0000	00000000	0	0	0	0	00	0	00
6	1	1110 1110 1110	1	1110 1110 1110	0	0000 0000 0000	00000000	0	0	0	0	00	0	00
7	1	1111 1111 1111	1	1111 1111 1111			00000000	0	0	0	0	00	0	00
8	1	0000 0000 0000	1	0000 0000 0000			00000000	0	0	0	0	00	0	00
9	1	0101 0101 0111	1	0101 0101 0111			00000000	0	0	0	0	00	0	00
10	1	0101 0101 0101	1	0101 0101 0101			00000000	0	0	0	0	00	0	00
11	0	0000 0000 0000	0	0000 0000 0000			00000000	0	0	0	0	00	0	00

2.7.5.15 PART 15: Reduced Data Rate (§2.2.25.5.3)

Notes:

1. *The primary intent of Part 6 beyond data validation in Register 40_{16} is to validate that the MCP /FCU Selected Altitude, FMS Selected Altitude, Barometric Pressure Setting, and FMS Vertical Mode Bit Counts in Register $5F_{16}$ go to **"00"** as parameter data inputs are reduced to rates that are less than the minimum acceptable rate.*

2. *Review all subparagraphs of Part **6** prior to performing tests. This is necessary to establish the appropriate timing between changing data inputs and interrogations.*

a. **Data Input Initialization:** (§2.2.25.5.1 and 2.2.25.5.2)

(1). Mode Control Panel Selected Altitude: (§2.2.25.5.2.1)

Via the appropriate Mode Control Panel (or other) interface, set the rate at which valid Selected Altitude data is provided to less than once per two seconds.

(2). Flight Management System (FMS) Selected Altitude: (§2.2.25.5.2.2)

Via the appropriate FMS (or other) interface, set the rate at which valid FMS Selected Altitude data is provided to less than once per two seconds.

(3). Air Data System (ADS) input of Barometric Pressure Setting: (§2.2.25.5.2.3)

Via the appropriate ADS (or other) interface, set the rate at which valid Barometric Pressure Setting data is provided to less than once per two seconds.

(4). FMS Vertical Mode Bits: (§2.2.25.5.2.4)

Via the appropriate interface, set the rate at which valid FMS Vertical Mode data is provided to less than once per two seconds.

(5). Target Altitude Bits: (§2.2.25.5.2.6)

Via the appropriate interface, set the rate at which valid Target Altitude data is provided to less than once per two seconds.

b. **Register 40_{16} Capability Verification**: (§2.2.25.1.4 and 2.2.25.5 –through- 2.2.25.5.3)

Within **ONE** (1) second of providing the transponder with data as detailed in Part 6.a., interrogate the transponder with the following GICB Extraction interrogation in order to extract the Register 40_{16} - Selected Vertical Intention data.

REGISTER 40_{16} SELECTED VERTICAL INTENTION GICB EXTRACTION EXTENDED DATA SOURCE INTERROGATION SETUP									
1 ---- 5	6 ---- 8	9 --- 13	14-16	17 -- 20	21 -- 24	25	26	27—28	29 --- 32
				"SD"					
"UF" =	**"PC" =**	**"RR" =**	**"DI" =**	**"IIS" =**	**"RRS =**	**"X" =**	**"LOS" =**	**"XX" =**	**"TMS" =**
4	0	**20** (14 HEX)	**7**	0	**0**	0	0	0	0

Note: *The interrogation should initiate the "B" timer for **18 ±1.0** seconds since a Comm-B Broadcast is initiated because servicing of Register $5F_{16}$ capability has changed. Note that the update to Register $5F_{16}$ may take up to one minute to change the "DR" Field to declare the broadcast.*

(1). Verify that the transponder replies with a "DF" = 20 reply.

(2). During replies to this interrogation sequence and subsequent interrogations during this test procedure, monitor the "DR" field. If the "DR" field changes to 4, 5, 6, or 7, then the transponder has initiated a Comm-B Broadcast.

When the "DR" field changes, start a Test Timer to monitor that the "B"-Timer runs for 18 ±1.0 seconds.

"DR" = 4 or 5 if TCAS Information IS NOT available

= 6 or 7 if TCAS Information IS available.

(3). Verify that the **DF=20** reply **"MB"** field provides Selected Vertical Intention Data with:

Part 6.b. DF = 20, Selected Vertical Intention "MB" Field															
Reply Bits:	33	34 ---------- 45	46	47 ---------- 58	59	60 ---------- 71	72 ---- 79	80	81	82	83	84- 85	86	87 -- 88
"MB" Bits:	1	2 ---------- 13	14	15 ---------- 26	27	28 ---------- 39	40 --- 47	48	49	50	51	52 - 53	54	55 -- 56
Field:	**Selected Altitude**		**FMS Selected Altitude**		**Baro. Pressure Setting**		**RSVD**	**MCP**	**VNAV**	**A-HLD**	**APP**	**RSVD**	**Target**	**Target**
	Status	Data	Status	Data	Status	Data		Mode	Mode	Mode	Mode		Status	SRC
Data:	0	0000 0000 0000	0	0000 0000 0000	0	0000 0000 0000	00000000	0	0	0	0	00	0	00

c. **Quasi-Static Parameter Monitoring, Register $5F_{16}$:** (§2.2.25.7)

Within **0.5** seconds of completing the reply acceptance in Part 6.b., interrogate the transponder with the following GICB Extraction interrogation in order to extract the Register $5F_{16}$ Quasi-Static Parameter Monitoring Capability:

REGISTER $5F_{16}$ QUASI-STATIC PARAMETER MONITORING GICB EXTRACTION EXTENDED DATA SOURCE INTERROGATION SETUP									
1 ---- 5	6 ---- 8	9 --- 13	14-16	17 -- 20	21 -- 24	25	26	27—28	29 --- 32
				"SD"					
"UF" =	**"PC" =**	**"RR" =**	**"DI" =**	**"IIS" =**	**"RRS =**	**"X" =**	**"LOS" =**	**"XX" =**	**"TMS" =**
4	0	**21** (15 HEX)	**7**	0	**F**	0	0	0	0

Verify that the transponder replies with a "**DF**" = **20** reply with:

(1). Bits **33** and **34** (bits **1** and **2** of the **"MB"** field) are set to "**00**" respectively to indicate that the Selected Altitude parameter in Register 40_{16} has changed as data input has been terminated.

(2). Bits **55** and **56** (bits **23** and **24** of the **"MB"** field) are set to **"00"** respectively to indicate that the FMS Selected Altitude parameter in Register 40_{16} has changed as data input has been terminated.

(3). Bits **57** and **58** (bits **25** and **26** of the **"MB"** field) are set to **"00"** respectively to indicate that the Barometric Pressure Setting parameter in Register 40_{16} has changed as data input has been terminated.

(4). Bits **49** and **50** (bits **17** and **18** of the **"MB"** field) are set to **"00"** respectively to indicate that the FMS Vertical Mode Bits in Register 40_{16} have changed as data input has been terminated.

d. **Common Usage GICB Capability Report, Register 17_{16}:** (§2.2.25.2)

Within **FIVE** (5) seconds of the interrogation/reply sequence in Part 6.c., interrogate the transponder with the following GICB Extraction interrogation in order to extract the Register 17_{16} Common Usage GICB Capability Report:

REGISTER 17_{16} COMMON USAGE GICB CAPABILITY GICB EXTRACTION EXTENDED DATA SOURCE INTERROGATION SETUP									
1 ---- 5	6 ---- 8	9 --- 13	14-16	17 -- 20	21 -- 24	25	26	27—28	29 --- 32
				"SD"					
"UF" =	**"PC" =**	**"RR" =**	**"DI" =**	**"IIS" =**	**"RRS =**	**"X" =**	**"LOS" =**	**"XX" =**	**"TMS" =**
4	0	**17** (11 HEX)	**7**	0	**7**	0	0	0	0

Verify that the transponder replies with a "**DF**" = **20** reply with:

(1). Bit **41** (bit **9** of the **"MB"** field) set to "**0**" to indicate that Register 40_{16} servicing capability has been lost and that data is NOT VALID.

(2). Bit **55** (bit **23** of the **"MB"** field) set to **"1"** to indicate that Register $5F_{16}$ servicing capability has been established and that data is valid.

e. **Mode S Specific Services GICB Capability, Register 18_{16}:** (§2.2.25.3)

Within **FIVE** (5) seconds of the interrogation/reply sequence in Part 6.c., Interrogate the transponder with the following GICB Extraction interrogation in order to extract the Register 18_{16} Mode S Specific Services GICB Capability:

REGISTER 18_{16} MODE S SPECIFIC SERVICES CAPABILITY GICB EXTRACTION EXTENDED DATA SOURCE INTERROGATION SETUP									
1 ---- 5	6 ---- 8	9 --- 13	14-16	17 -- 20	21 -- 24	25	26	27—28	29 --- 32
				"SD"					
"UF" =	**"PC" =**	**"RR" =**	**"DI" =**	**"IIS" =**	**"RRS =**	**"X" =**	**"LOS" =**	**"XX" =**	**"TMS" =**
4	0	**17** (11 HEX)	**7**	0	**8**	0	0	0	0

Verify that the transponder replies with a "**DF**" = **20** reply with:

(1). Bit **64** (bit **32** of the **"MB"** field) set to "**1**" to indicate that Register 19_{16} servicing capability has been established during the power-on cycle.

(2). Bit **65** (bit **33** of the **"MB"** field) set to **"1"** to indicate that Register 18_{16} servicing capability has been established during the power-on cycle.

(3). Bit **66** (bit **34** of the **"MB"** field) set to **"1"** to indicate that Register 17_{16} servicing capability has been established during the power-on cycle.

f. **Mode S Specific Services GICB Capability, Register 19_{16}:** (§2.2.25.3)

Within **FIVE** (5) seconds of the interrogation/reply sequence in Part 6.c., interrogate the transponder with the following GICB Extraction interrogation in order to extract the Register 19_{16} Mode S Specific Services GICB Capability:

REGISTER 19_{16} MODE S SPECIFIC SERVICES CAPABILITY GICB EXTRACTION EXTENDED DATA SOURCE INTERROGATION SETUP									
1 ---- 5	6 ---- 8	9 --- 13	14-16	17 -- 20	21 -- 24	25	26	27—28	29 --- 32
				"SD"					
"UF" =	**"PC" =**	**"RR" =**	**"DI" =**	**"IIS" =**	**"RRS =**	**"X" =**	**"LOS" =**	**"XX" =**	**"TMS" =**
4	0	**17** (11 HEX)	**7**	0	**9**	0	0	0	0

Verify that the transponder replies with a "**DF**" = **20** reply with:

(1). Bit **80** (bit **49** of the **"MB"** field) set to "**1**" to indicate that Register 40_{16} servicing capability has been established during the power-on cycle.

(2). Bit **50** (bit **18** of the **"MB"** field) set to **"1"** to indicate that Register $5F_{16}$ servicing capability has been established during the power-on cycle.

g. **Broadcast Extraction, Register 10_{16}:** (§2.2.25.1 and 2.2.25.2.3)

Within less than **15** seconds after starting the Test Timer in Part 6.b.(2), e.g., the "B" Timer monitor, interrogate the transponder with the following Comm-B Extraction interrogations in order to extract the Comm-B broadcast message which should be the Data Link Capability Report contained in Register 10_{16}.

COMM-B BROADCAST EXTRACTION INTERROGATION SETUP									
1 ---- 5	6 ---- 8	9 --- 13	14-16	17 -- 20	21 -- 24	25	26	27—28	29 --- 32
				"SD"					
"UF" =	**"PC" =**	**"RR" =**	**"DI" =**	**"IIS" =**	**"RRS =**	**"X" =**	**"LOS" =**	**"XX" =**	**"TMS" =**
4	0	**16** (10 HEX)	**7**	0	**0**	0	0	0	0

Within **ONE** (1) second of starting the interrogations, verify that the transponder replies with a "DF" = 20 reply with:

Note: *The 1 second is based on the update rate specified for Register 10_{16}.*

(1). "DR" = 4 or 5 if TCAS Information **IS NOT** available

= 6 or 7 if TCAS Information **IS** available.

(2). Bit **33** –through- **40** (bit 1 –through- **8** of the "MB" field) set to 10 HEX (**0001 0000**).

(3). Bit **57** ["Mode S Specific Services Capability" (bit **25** of the "MB" field)] set to ZERO (0) to indicate that the transponder has lost Mode S Specific Services Capability.

(4). Bit **65** ["AIS" subfield (bit **33** of the "MB" field)] set to ZERO (0) to indicate that there is NO Aircraft Identification capability,

(5). Bit **67** ["SIC" subfield (bit **35** of the "MB" field)] set to ONE (1) to indicate that the transponder does have "SI" capability.

(6). Bit **68** ["Common Usage GICB Capability Report" (bit **36** of the "MB" field)] set to ZERO (0) to indicate that Register 17_{16} has changed as Register 40_{16} data has been lost.

h. **Comm-B Broadcast due to Data Link Capability Change Termination:** (§2.2.25.1 and 2.2.25.2.3)

Continue to interrogate the transponder with the interrogation described in Part 6. g. (e.g., the last step) until the transponder replies with a "DF" = 20 reply with "DR" NOT EQUAL to 4, 5, 6, or 7.

Verify that the elapsed time of the Test Timer started in Part 2.b.(2) is 18 +/- 1 second.

Note: *At this time, the "B" timer started in Part 6.b.(2). as broadcast due to a change in Data Link Capability should have terminated.*

RHS Commentary: *Added new Part 14 in order to test under reduced data rate conditions. Remove this commentary after making change to review copy.*

2.7.5.16 PART 16: Multiple Data Sources (§2.2.25 –through- 2.2.25.5)

If Multiple Data Sources of Register 40_{16} parameters are provided to the Unit-Under-Test (UUT), then **REPEAT** all applicable sections of Part **2** for each additional data source that was not tested while performing Parts **1** through **14** above.

2.7.6 Register 50_{16} ENHANCED SURVEILLANCE - PROTOCOL AND INTERFACE (§2.2.25.6)

Introduction:

The intent of this procedure is to validate all aspects of Enhanced Surveillance Servicing of Register 50_{16}.

2.7.6.1 PART 1: Capability Verification_(§2.2.25.6)

TEST PROCEDURE:

Note: *The primary intent of Part 1 is to validate appropriate capability declaration of No Capability prior to providing data to Register 50_{16}.*

Ensure that NO Flight Identification or Aircraft Registration data is being provided to the transponder.

Ensure that the TCAS / Transponder interface is **NOT ACTIVE**. If the interface is active, TCAS will provide data to set the Data Link Capability and thereby compromise the results of the following tests. Likewise, TCAS could attempt to set the Resolution Advisory Report and thereby compromise the results of the following tests.

Ensure that no other data is being provided to the transponder that could result in the loading of BDS registers internal to the transponder. This includes **NO** Servicing of Register **40_{16}**.

Disable the Extended Squitter function prior to starting the following procedures in order to keep from setting various BDS registers during the following tests.

a. **Register 50_{16} Initial Setting – Part A:** (§2.2.25.6)

Interrogate the transponder with the following GICB Extraction interrogation in order to extract the Register 50_{16} Track and Turn Report.

REGISTER 50_{16} TRACK AND TURN REPORT GICB EXTRACTION DATA SOURCE INTERROGATION SETUP					
1 ---- 5	6 ---- 8	9 --- 13	14-16	17 -- 20	21 ---------- 32
				"SD"	
"UF" =	**"PC" =**	**"RR" =**	**"DI" =**	**"IIS" =**	**"NOT ASSIGNED" =**
4	0	21 (15 HEX)	**0**	0	0

Verify that the transponder replies with a "DF" = 20 reply with Bit **33** –through- **88** ("BDS" subfield (bit **1** –through- **56** of the "MB" field)] set to ALL ZERO (0).

a. **Register 50_{16} Initial Setting – Part B:** (§2.2.25.6)

Interrogate the transponder with the following GICB Extraction interrogation in order to extract the Register 50_{16} Track and Turn Report.

REGISTER 50_{16} TRACK AND TURN REPORT GICB EXTRACTION EXTENDED DATA SOURCE INTERROGATION SETUP									
1 ---- 5	6 ---- 8	9 --- 13	14-16	17 -- 20	21 -- 24	25	26	27—28	29 --- 32
				"SD"					
"UF" =	**"PC" =**	**"RR" =**	**"DI" =**	**"IIS" =**	**"RRS =**	**"X" =**	**"LOS" =**	**"XX" =**	**"TMS" =**
4	0	**21** (15 HEX)	**7**	0	**0**	0	0	0	0

Verify that the transponder replies with the same content as required in section 2.7.6.1.a.

Note: *Two separate interrogations are used as Register 50_{16} can be extracted by using either the Data Source or Extended Data Source extraction protocols.*

c. **Data Link Capability Report, Register 10_{16}:** (§2.2.25.1)

Interrogate the transponder with the following GICB Extraction interrogation in order to extract the Register 10_{16} Data Link Capability Report.

REGISTER 10_{16} DATA LINK CAPABILITY GICB EXTRACTION DATA SOURCE INTERROGATION SETUP					
1 ---- 5	6 ---- 8	9 --- 13	14-16	17 -- 20	21 ---------- 32
				"SD"	
"UF" =	**"PC" =**	**"RR" =**	**"DI" =**	**"IIS" =**	**"NOT ASSIGNED" =**
4	0	**17** (11 HEX)	**0**	0	0

Verify that the transponder replies with a "**DF**" = **20** reply with:

(1). Bit **65 [**"**AIS**" subfield (bit **33** of the **"MB"** field)] set to "**0**" to indicate **NO** Flight Identification capability,

(2). Bit **57** [Mode S Specific Services Capability (bit **25** of the **"MB"** field)] set to "**0**" to indicate **NO** Mode S Specific Services Capability.

Note: *Servicing of Registers 02_{16}, 03_{16}, 04_{16}, 10_{16}, 17_{16} through $1C_{16}$, 20_{16} and 30_{16} does not constitute Mode S Specific Services Capability.*

(3). Bit **67** [Surveillance Identifier **("SI")** (bit **35** of the **"MB"** field)] set to **"1"** to indicate that the transponder **DOES** Have **"SI"** Capability.

(4). Bit **68** [Common Usage GICB Capability Report (bit **36** of the **"MB"** field)] set to **"0"** to indicate that there has been no change in the Common Usage GICB Capability Report, Register 17_{16}.

d. **Common Usage GICB Capability Report, Register 17_{16}:** (§2.2.25.2)

Interrogate the transponder with the following GICB Extraction interrogation in order to extract the Register 17_{16} Common Usage GICB Capability Report:

REGISTER 17_{16} COMMON USAGE GICB CAPABILITY GICB EXTRACTION EXTENDED DATA SOURCE INTERROGATION SETUP									
1 ---- 5	6 ---- 8	9 --- 13	14-16	17 -- 20	21 -- 24	25	26	27—28	29 --- 32
				"SD"					
"UF" =	**"PC" =**	**"RR" =**	**"DI" =**	**"IIS" =**	**"RRS =**	**"X" =**	**"LOS" =**	**"XX" =**	**"TMS" =**
4	0	**17** (11 HEX)	**7**	0	**7**	0	0	0	0

Verify that the transponder replies with a "**DF**" = **20** reply with:

(1). Bits **33** through **60** (bits **1** through **28** of the **"MB"** field) set to "**0**" to indicate **NO** Capability or capability changes in the Common Usage GICB Capability Report, Register 17_{16}.

(2). Bits **61** through **88** (bits **29** through **56** of the **"MB"** field) set to "**0**" since these bits are Reserved or **"Don't Care"**.

e. **Mode S Specific Services GICB Capability, Register 18_{16}:** (§2.2.25.3)

Interrogate the transponder with the following GICB Extraction interrogation in order to extract the Register 18_{16} Mode S Specific Services GICB Capability:

REGISTER 18_{16} MODE S SPECIFIC SERVICES CAPABILITY GICB EXTRACTION EXTENDED DATA SOURCE INTERROGATION SETUP									
1 ---- 5	6 ---- 8	9 --- 13	14-16	17 -- 20	21 -- 24	25	26	27—28	29 --- 32
				"SD"					
"UF" =	**"PC" =**	**"RR" =**	**"DI" =**	**"IIS" =**	**"RRS =**	**"X" =**	**"LOS" =**	**"XX" =**	**"TMS" =**
4	0	**17** (11 HEX)	**7**	0	**8**	0	0	0	0

Verify that the transponder replies with a "**DF**" = **20** reply with:

Bits **33** –through- **88** (bits **1** –through- **56** of the "MB" Field) set to ZERO (0) to indicate NO Capability has been established to service the BDS Codes designated in Register 18_{16}.

f. **Mode S Specific Services GICB Capability, Register 19_{16}:** (§2.2.25.3)

Interrogate the transponder with the following GICB Extraction interrogation in order to extract the Register 19_{16} Mode S Specific Services GICB Capability:

REGISTER 19_{16} MODE S SPECIFIC SERVICES CAPABILITY GICB EXTRACTION EXTENDED DATA SOURCE INTERROGATION SETUP									
1 ---- 5	6 ---- 8	9 --- 13	14-16	17 -- 20	21 -- 24	25	26	27—28	29 --- 32
				"SD"					
"UF" =	**"PC" =**	**"RR" =**	**"DI" =**	**"IIS" =**	**"RRS =**	**"X" =**	**"LOS" =**	**"XX" =**	**"TMS" =**
4	0	**17** (11 HEX)	**7**	0	**9**	0	0	0	0

Verify that the transponder replies with a "**DF**" = **20** reply with:

Bits **33** through **88** (bits **1** through **56** of the **"MB"** field) set to "**0**" to indicate **NO** Capability has been established to service the BDS Codes designated in Register 19_{16}.

g. **Mode S Specific Services GICB Capability, Register $1A_{16}$:** (§2.2.25.3)

Interrogate the transponder with the following GICB Extraction interrogation in order to extract the Register $1A_{16}$ Mode S Specific Services GICB Capability:

REGISTER $1A_{16}$ MODE S SPECIFIC SERVICES CAPABILITY GICB EXTRACTION EXTENDED DATA SOURCE INTERROGATION SETUP									
1 ---- 5	6 ---- 8	9 --- 13	14-16	17 -- 20	21 -- 24	25	26	27—28	29 --- 32
				"SD"					
"UF" =	**"PC" =**	**"RR" =**	**"DI" =**	**"IIS" =**	**"RRS =**	**"X" =**	**"LOS" =**	**"XX" =**	**"TMS" =**
4	0	**17** (11 HEX)	**7**	0	**A**	0	0	0	0

Verify that the transponder replies with a "**DF**" = **20** reply with:

Bits **33** through **88** (bits **1** through **56** of the **"MB"** field) set to "**0**" to indicate **NO** Capability has been established to service the BDS Codes designated in Register $1A_{16}$.

h. **Mode S Specific Services GICB Capability, Register $1B_{16}$:** (§2.2.25.3)

Interrogate the transponder with the following GICB Extraction interrogation in order to extract the Register $1B_{16}$ Mode S Specific Services GICB Capability:

REGISTER $1B_{16}$ MODE S SPECIFIC SERVICES CAPABILITY GICB EXTRACTION EXTENDED DATA SOURCE INTERROGATION SETUP									
1 ---- 5	6 ---- 8	9 --- 13	14-16	17 -- 20	21 -- 24	25	26	27—28	29 --- 32
				"SD"					
"UF" =	**"PC" =**	**"RR" =**	**"DI" =**	**"IIS" =**	**"RRS =**	**"X" =**	**"LOS" =**	**"XX" =**	**"TMS" =**
4	0	**17** (11 HEX)	**7**	0	**B**	0	0	0	0

Verify that the transponder replies with a "**DF**" = **20** reply with:

Bits **33** through **88** (bits **1** through **56** of the **"MB"** field) set to "**0**" to indicate **NO** Capability has been established to service the BDS Codes designated in Register $1B_{16}$.

i. **Mode S Specific Services GICB Capability, Register $1C_{16}$:** (§2.2.25.3)

Interrogate the transponder with the following GICB Extraction interrogation in order to extract the Register $1C_{16}$ Mode S Specific Services GICB Capability:

REGISTER $1C_{16}$ MODE S SPECIFIC SERVICES CAPABILITY GICB EXTRACTION EXTENDED DATA SOURCE INTERROGATION SETUP									
1 ---- 5	6 ---- 8	9 --- 13	14-16	17 -- 20	21 -- 24	25	26	27—28	29 --- 32
				"SD"					
"UF" =	**"PC" =**	**"RR" =**	**"DI" =**	**"IIS" =**	**"RRS =**	**"X" =**	**"LOS" =**	**"XX" =**	**"TMS" =**
4	0	**17** (11 HEX)	**7**	0	**C**	0	0	0	0

Verify that the transponder replies with a "**DF**" = **20** reply with:

Bits **33** through **88** (bits **1** through **56** of the **"MB"** field) set to "**0**" to indicate **NO** Capability has been established to service the BDS Codes designated in Register $1C_{16}$.

2.7.6.2 PART 2: Register 50_{16} - Track and Turn Report Validation (§2.2.25.6 and 2.2.25.6.1)

Notes:

1. *The primary intent of Part 2 beyond data validation in Register 50_{16} is to validate capability declaration.*
2. *Review all subparagraphs of Part 2 prior to performing tests. This is necessary to establish the appropriate timing between changing data inputs and interrogations.*

a. **Data Input Initialization:** (§2.2.25.6.2)

(1). Roll Angle Data Input: (§2.2.25.6.2.1)

Via an appropriate input interface, provide the transponder with the following Roll Angle data at a minimum rate of 5 per second in order to provide appropriate Roll Angle information.

Roll Angle (degrees)			
[See Note 1]		[See Note 2,3]	
Data Value (degrees)	**Typical Binary Encoding**	**Rounded Input Data Value (degrees)**	**Rounded Input Encoding**
+ 29.99816895	0_001 0101 0101 0101	+ 30.05859375	0_0 1010 1011

Notes:

1. ***Data Input Value*** *and* ***Typical Binary Encoding*** *represent the data as it is provided to the transponder in two's complement format. Sign Bit often referred to as 0 = Right Wing Down, 1 = Left Wing Down*

2. ***Rounded Input Data Value*** *and* ***Rounded Input Encoding*** *represent the data as it is expected to be seen in the* ***"MB"*** *field of Register* 50_{16}.

Data must be rounded to a resolution of 0.17578125 degrees; therefore,

```
  0_001 0101 010 1 0101
+    000 0000 000 1 0000
  0_001 0101 011 0 0101
```

Register 50_{16} ***"MB"*** *encoding = 0_00 1010 1011 (bits* ***2*** *through* ***11****) (0AB Hex)*

3. *Data is shown encoded with the "Sign Bit", e.g., bit* ***2*** *being to the left of the "Underscore".*

(2). True Track Angle Data Input: (§2.2.25.6.2.2)

Via an appropriate input interface, provide the transponder with the following Track Angle (True) data at a minimum rate of 5 per second in order to provide appropriate Track Angle (True) information.

Track Angle (True) (degrees)			
[See Note 1]		[See Note 2,3]	
Data Value (degrees)	**Typical Binary Encoding**	**Rounded Input Data Value (degrees)**	**Rounded Input Encoding**
+ 119.9981689	0_101 0101 0101 0101	+ 120.0585938	0_10 1010 1011

Notes:

1. ***Data Input Value*** *and* ***Typical Binary Encoding*** *represent the data as it is provided to the transponder in two's complement format. Sign Bit often referred to as 0 = East, 1 = West.*

2. ***Rounded Input Data Value*** *and* ***Rounded Input Encoding*** *represent the data as it is expected to be seen in the* ***"MB"*** *field of Register* 50_{16}.

Data must be rounded to a resolution of 0.17578125 degrees; therefore,

```
    0_101 0101 010 1 0101
+       000 0000 000 1 0000

    0_101 0101 011 0 0101
```

Register 50_{16} ***"MB"*** *encoding = 0_10 1010 1011 (bits 13 through 23) (2AB Hex)*

3. *Data is shown encoded with the "Sign Bit", e.g., bit* ***13*** *being to the left of the "Underscore".*

(3). Ground Speed: (§2.2.25.6.2.3)

Via an appropriate input interface, provide the transponder with the following Ground Speed data at a minimum rate of 5 per second in order to provide appropriate Ground Speed information.

Ground Speed (knots)			
[See Note 1]		**[See Note 2,3]**	
Data Value (knots)	**Typical Binary Encoding**	**Rounded Input Data Value (knots)**	**Rounded Input Encoding**
+ 2,730.625	0__101 0101 0101 0101	2,046	11 1111 1111

Notes:

1. ***Data Input Value*** *and* ***Typical Binary Encoding*** *represent the data as it is provided to the transponder in two's complement format. Sign Bit is always positive (e,g., = "0").*

2. ***Rounded Input Data Value*** *and* ***Rounded Input Encoding*** *represent the data as it is expected to be seen in the* ***"MB"*** *field of Register* 50_{16}.

3. *Maximum Ground Speed that can be mapped into Register* 50_{16} *is 2,046 knots. If valid input data exceeds this value, then the Register* 50_{16} ***"MB"*** *(bit* ***25*** *through* ***34****) encoding should be set to ALL ONE's.*

(4). Track Angle Rate Data Input: (§2.2.25.6.2.4)

Via an appropriate input interface, provide the transponder with the following Track Angle Rate data at a minimum rate of 5 per second in order to provide appropriate Track Angle Rate information.

Track Angle Rate (degrees/second)			
[See Note 1]		**[See Note 2,3]**	
Data Value (degrees/second)	**Typical Binary Encoding**	**Rounded Input Data Value (degrees/second)**	**Rounded Input Encoding**
+ 21.328125	0__101 0101 0101	15.96875	0_1 1111 1111

Notes:

1. ***Data Input Value*** *and* ***Typical Binary Encoding*** *represent the data as it is provided to the transponder in two's complement format. Sign Bit often referred to as 0 = Clockwise (CW) = Right, 1 = Counter-Clockwise (CCW) = Left.*

2. *The input data if +21.328125 degrees/second exceeds the maximum allowable value of 15.96875 degrees/second that can be encoded in Register* 50_{16}*: therefore, the data in Register* 50_{16} ***shall*** *be set to all* ***ONE's*** *with the exception of the sign bit.*

3. *Data is shown encoded with the "Sign Bit", e.g., bit* ***36*** *being to the left of the "Underscore".*

(5). <u>True Air Speed - ADS:</u> (§2.2.25.6.2.5)

Via an appropriate input interface, provide the transponder with the following True Air Speed data at a minimum rate of 5 per second in order to provide appropriate True Air Speed information.

True Air Speed (knots) - ADS			
[See Note 1]		**[See Note 2]**	
Data Value (knots)	**Typical Binary Encoding**	**Rounded Input Data Value (knots)**	**Rounded Input Encoding**
1365.3125	0 _ 101 0101 0101 0101	**1,366.00**	10 1010 1011

Notes:

1. ***Data Input Value*** *and* ***Typical Binary Encoding*** *represent the data as it is provided to the transponder in two's complement format. Sign Bit is always positive (e,g., = "0").*
2. ***Rounded Input Data Value*** *and* ***Rounded Input Encoding*** *represent the data as it is expected to be seen in the* ***"MB"*** *field of Register 50_{16}.*
   Data must be rounded to a resolution of ***2.0*** *knots; therefore,*
   10 1010 1010 1 0101
   + 00 0000 0000 1 0000
   10 1010 1011 0 0101

Register 50_{16} ***"MB"*** *encoding = 10 1010 1011 (bit* ***47*** *through* ***56****) (2AB Hex)*

b. **<u>Register 50_{16} Capability Verification:</u>** (§2.2.25.6 –through- 2.2.25.6.3)

Within **1.3** seconds of providing the transponder with data as detailed in Part 2.a., interrogate the transponder with the following GICB Extraction interrogation in order to extract the Register 50_{16} - Track and Turn Report data.

REGISTER 50_{16} TRACK AND TURN REPORT GICB EXTRACTION EXTENDED DATA SOURCE INTERROGATION SETUP									
1 ---- 5	6 ---- 8	9 --- 13	14-16	17 -- 20	21 -- 24	25	26	27—28	29 --- 32
				"SD"					
"UF" =	**"PC" =**	**"RR" =**	**"DI" =**	**"IIS" =**	**"RRS =**	**"X" =**	**"LOS" =**	**"XX" =**	**"TMS" =**
4	0	**21** (15 HEX)	**7**	0	**0**	0	0	0	0

Notes:

1. *The interrogation should initiate the* ***"B"*** *timer for* ***18 ±1.0*** *seconds since a Comm-B Broadcast is initiated.*

2. *In this case, the Comm-B Broadcast is caused by the contents of Register 50_{16} changing. This change causes a change to Register 17_{16}, which then forces a change to Register 10_{16}, which then results in the initiation of the Comm-B Broadcast.*

(1). Verify that the transponder replies with a **"DF" = 20** reply.

(2). During replies to this interrogation sequence and subsequent interrogations during this test procedure, monitor the **"DR"** field. If the **"DR"** field changes to **4, 5, 6,** or **7**, then the transponder has initiated a Comm-B Broadcast.

When the **"DR"** field changes, start a Test Timer to monitor that the **"B"**-Timer runs for **18 ±1.0** seconds.

"DR" = 4 or 5 if TCAS Information IS NOT available

= 6 or 7 if TCAS Information IS available.

(3). Verify that the **"DF"=20** reply **"MB"** field provides data with:

Part 2.b.(3) DF = 20, Track and Turn Report "MB" Field													
Reply Bits:	33	34	35 ---------- 43	44	45	46 ---- 55	56	57 -------- 66	67	68	69 ------- 77	78	79 ---------- 88
"MB" Bits:	1	2	3 ---------- 11	12	13	14 ----- 23	24	25 -------- 34	35	36	37 ------- 45	46	47 --------- 56
Field:	**Roll Angle**			**True Track Angle**			**Ground Speed**		**Track Angle Rate**			**True Airspeed**	
	Status	Sign	Data	Status	Sign	Data	Status	Data	Status	Sign	Data	Status	Data
Data:	1	0	0 1010 1011	1	0	10 1010 1011	1	11 1111 1111	1	0	1 1111 1111	1	10 1010 1011

c. **<u>Common Usage GICB Capability Report, Register 17_{16}:</u>** (§2.2.25.2.2.4 and 2.2.25.2.2.7)

Within **FIVE** (5) seconds of providing the transponder with data as detailed in Part 2.a., interrogate the transponder with the following GICB Extraction interrogation in order to extract the Register 17_{16} Common Usage GICB Capability Report:

REGISTER 17_{16} COMMON USAGE GICB CAPABILITY GICB EXTRACTION EXTENDED DATA SOURCE INTERROGATION SETUP									
1 ---- 5	6 ---- 8	9 --- 13	14-16	17 -- 20	21 -- 24	25	26	27—28	29 --- 32
				"SD"					
"UF" =	**"PC" =**	**"RR" =**	**"DI" =**	**"IIS" =**	**"RRS =**	**"X" =**	**"LOS" =**	**"XX" =**	**"TMS" =**
4	0	**17** (11 HEX)	**7**	0	**7**	0	0	0	0

Verify that the transponder replies with a "**DF**" = **20** reply with:

Bit **48** (bit **16** of the **"MB"** field) set to "**1**" to indicate that Register 50_{16} servicing capability has been established and that data is valid.

d. **<u>Mode S Specific Services GICB Capability, Register 18_{16}:</u>** (§2.2.25.3)

Within **FIVE** (5) seconds of providing the transponder with data as detailed in Part 2.a., interrogate the transponder with the following GICB Extraction interrogation in order to extract the Register 18_{16} Mode S Specific Services GICB Capability:

REGISTER 18_{16} MODE S SPECIFIC SERVICES CAPABILITY GICB EXTRACTION EXTENDED DATA SOURCE INTERROGATION SETUP									
1 ---- 5	6 ---- 8	9 --- 13	14-16	17 -- 20	21 -- 24	25	26	27—28	29 --- 32
				"SD"					
"UF" =	**"PC" =**	**"RR" =**	**"DI" =**	**"IIS" =**	**"RRS =**	**"X" =**	**"LOS" =**	**"XX" =**	**"TMS" =**
4	0	**17** (11 HEX)	**7**	0	**8**	0	0	0	0

Verify that the transponder replies with a "**DF**" = **20** reply with:

(1). Bit **64** (bit **32** of the **"MB"** field) set to "**1**" to indicate that Register 19_{16} servicing capability has been established.

(2). Bit **65** (bit **33** of the **"MB"** field) set to **"1"** to indicate that Register 18_{16} servicing capability has been established.

(3). Bit **66** (bit **34** of the **"MB"** field) set to **"1"** to indicate that Register 17_{16} servicing capability has been established.

e. **Mode S Specific Services GICB Capability, Register 19_{16}:** (§2.2.25.3.2.8 and 2.2.25.3.3)

Within **FIVE** (5) seconds of providing the transponder with data as detailed in Part 2.a., interrogate the transponder with the following GICB Extraction interrogation in order to extract the Register 19_{16} Mode S Specific Services GICB Capability:

REGISTER 19_{16} MODE S SPECIFIC SERVICES CAPABILITY GICB EXTRACTION EXTENDED DATA SOURCE INTERROGATION SETUP									
1 ---- 5	6 ---- 8	9 --- 13	14-16	17 -- 20	21 -- 24	25	26	27—28	29 --- 32
				"SD"					
"UF" =	**"PC" =**	**"RR" =**	**"DI" =**	**"IIS" =**	**"RRS =**	**"X" =**	**"LOS" =**	**"XX" =**	**"TMS" =**
4	0	**17** (11 HEX)	**7**	0	**9**	0	0	0	0

Verify that the transponder replies with a "**DF**" = **20** reply with:

Bit **65** (bit **33** of the **"MB"** field) set to "**1**" to indicate that Register 50_{16} servicing capability has been established.

f. **Comm-B Broadcast Validation:** (§2.2.25.1.4)

Continue to interrogate the transponder with the following GICB Extraction interrogation in order to extract the Register 50_{16} - Track and Turn Report data monitor the **"DR"** field in the reply.

REGISTER 50_{16} TRACK AND TURN REPORT GICB EXTRACTION EXTENDED DATA SOURCE INTERROGATION SETUP									
1 ---- 5	6 ---- 8	9 --- 13	14-16	17 -- 20	21 -- 24	25	26	27—28	29 --- 32
				"SD"					
"UF" =	**"PC" =**	**"RR" =**	**"DI" =**	**"IIS" =**	**"RRS =**	**"X" =**	**"LOS" =**	**"XX" =**	**"TMS" =**
4	0	**21** (15 HEX)	**7**	0	**0**	0	0	0	0

Within **TEN** (10) seconds of providing the transponder with data as detailed in Part 2.a.,

Verify that the **"DR"** field in **DF=20** replies is set to **"DR" = 4, 5, 6**, or **7** to indicate that a Comm-B Broadcast is active.

g. **Comm-B Broadcast Extraction:** (§2.2.25.1.4)

After determining that the **"DR"** field has been set to **"DR"= 4, 5, 6,** or **7** in Part 2.f., interrogate the transponder with the following Comm-B Extraction interrogation in order to extract the Comm-B broadcast message which should be the Data Link Capability Report contained in Register 10_{16}.

COMM-B BROADCAST EXTRACTION INTERROGATION SETUP									
1 ---- 5	6 ---- 8	9 --- 13	14-16	17 -- 20	21 -- 24	25	26	27—28	29 --- 32
				"SD"					
"UF" =	**"PC" =**	**"RR" =**	**"DI" =**	**"IIS" =**	**"RRS =**	**"X" =**	**"LOS" =**	**"XX" =**	**"TMS" =**
4	0	**16** (10 HEX)	**7**	0	**0**	0	0	0	0

Verify that the transponder replies with a "**DF**" = **20** reply with:

(1). "DR" = 4 or 5 if TCAS Information **IS NOT** available

= 6 or 7 if TCAS Information **IS** available.

(2). Bit **33** –through- **40** (bit 1 –through- **8** of the "MB" field) set to 10 HEX (**0001 0000**).

(3). Bit **57** ["Mode S Specific Services Capability" (bit **25** of the "MB" field)] set to ONE (1) to indicate that the transponder has established Mode S Specific Services Capability.

(4). Bit **67** ["SIC" subfield (bit **35** of the "MB" field)] set to ONE (1) to indicate that the transponder does have "SI" capability.

(5). Bit **68** ["Common Usage GICB Capability Report" (bit **36** of the "MB" field)] set to ONE (1) to indicate that Register 17_{16} is being serviced or has changed.

h. **Comm-B Broadcast due to Data Link Capability Change Termination:** (§2.2.25.1.4)

Continue to interrogate the transponder with the interrogation described in Part 2. g. (e.g., the last step) until the transponder replies with a "DF" = 20 reply with "DR" NOT EQUAL to 4, 5, 6, or 7.

Verify that the elapsed time of the Test Timer started in Part 2.b.(2) is 18 +/- 1 second.

Note: *At this time, the "B" timer started in Part 2.b.(2). as broadcast due to a change in Data Link Capability should have terminated.*

2.7.6.3 PART 3: Register 50_{16} - Track and Turn Report - Data Change Validation (§2.2.25.6 and 2.2.25.6.1)

Notes:

1. *The primary intent of Part 3 beyond data validation in Register 50_{16} is to validate Declaration of Capability as data has been terminated.*

2. *Review all subparagraphs of Part **3** prior to performing tests. This is necessary to establish the appropriate timing between changing data inputs and interrogations.*

a. **Data / Source Change:** (§2.2.25.6.2)

(1). Roll Angle Data Input: (§2.2.25.6.2.1)

Via an appropriate input interface, terminate provision of valid data to the transponder with Roll Angle data.

(2). True Track Angle Data Input: (§2.2.25.6.2.2)

Via an appropriate input interface, terminate provision of valid data to the transponder with True Track Angle data.

(3). Ground Speed Data Input: (§2.2.25.6.2.3)

Via an appropriate input interface, terminate provision of valid data to the transponder with Ground Speed data.

(4). Track Angle Rate Data Input: (§2.2.25.6.2.4)

Via an appropriate input interface, terminate provision of valid data to the transponder with Track Angle Rate data.

(5) True Airspeed Data Input: (§2.2.25.6.2.5)

Via an appropriate input interface, terminate provision of valid data to the transponder with True Airspeed data.

b. **Register 50_{16} Validation:** (§2.2.25.6 –through- 2.2.25.6.3)

Within **1.3** seconds of changing the data sources in Part 3.a, interrogate the transponder with the following GICB Extraction interrogation in order to extract the Register 50_{16} Track and Turn Report Data:

REGISTER 50_{16} TRACK AND TURN REPORT GICB EXTRACTION EXTENDED DATA SOURCE INTERROGATION SETUP									
1 ---- 5	6 ---- 8	9 --- 13	14-16	17 -- 20	21 -- 24	25	26	27—28	29 --- 32
				"SD"					
"UF" =	**"PC" =**	**"RR" =**	**"DI" =**	**"IIS" =**	**"RRS =**	**"X" =**	**"LOS" =**	**"XX" =**	**"TMS" =**
4	0	**21** (15 HEX)	**7**	0	**0**	0	0	0	0

Notes:

1. *The interrogation should initiate the **"B"** timer for **18 ±1.0** seconds since a Comm-B Broadcast is initiated.*

2. *In this case, the Comm-B Broadcast is caused by the contents (e.g., servicing) of Register 50_{16} changing as data for Register 50_{16} has been terminated. This change causes a change to Register 17_{16}, which then forces a change to Register 10_{16}, which then results in the initiation of the Comm-B Broadcast.*

(1). Verify that the transponder replies with a **"DF" = 20** reply.

(2). During replies to this interrogation sequence and subsequent interrogations during this test procedure, monitor the **"DR"** field. If the **"DR"** field changes to **4, 5, 6,** or **7**, then the transponder has initiated a Comm-B Broadcast.

When the **"DR"** field changes, start a Test Timer to monitor that the **"B"-**Timer runs for **18 ±1.0** seconds.

"DR" = 4 or 5 if TCAS Information IS NOT available

= 6 or 7 if TCAS Information IS available.

(3). Verify that the **"DF"=20** reply **"MB"** field provides data with:

Part 3.b.(3) DF = 20, Track and Turn Report "MB" Field														
Reply Bits:	33	34	35 ---------- 43	44	45	46 ---- 55	56	57 -------- 66	67	68	69 ------- 77	78	79 ---------- 88
"MB" Bits:	1	2	3 ---------- 11	12	13	14 ----- 23	24	25 -------- 34	35	36	37 ------- 45	46	47 --------- 56
Field:	**Roll Angle**			**True Track Angle**			**Ground Speed**		**Track Angle Rate**			**True Airspeed**	
	Status	Sign	Data	Status	Sign	Data	Status	Data	Status	Sign	Data	Status	Data
Data:	0	0	0 0000 0000	0	0	00 0000 0000	0	00 0000 0000	0	0	0 0000 0000	0	00 0000 0000

c. **Common Usage GICB Capability Report, Register 17_{16}:** (§2.2.25.2.2.4 and 2.2.25.2.2.7)

Within **FIVE** (5) seconds of the interrogation/reply sequence in Part 3.b., interrogate the transponder with the following GICB Extraction interrogation in order to extract the Register 17_{16} Common Usage GICB Capability Report:

REGISTER 17_{16} COMMON USAGE GICB CAPABILITY GICB EXTRACTION EXTENDED DATA SOURCE INTERROGATION SETUP									
1 ---- 5	6 ---- 8	9 --- 13	14-16	17 -- 20	21 -- 24	25	26	27—28	29 --- 32
				"SD"					
"UF" =	**"PC" =**	**"RR" =**	**"DI" =**	**"IIS" =**	**"RRS =**	**"X" =**	**"LOS" =**	**"XX" =**	**"TMS" =**
4	0	**17** (11 HEX)	**7**	0	**7**	0	0	0	0

Verify that the transponder replies with a "**DF**" = **20** reply having:

Bit **48** (bit **16** of the **"MB"** field) set to "**0**" to indicate that Register 50_{16} servicing capability has been changed as data for Register 50_{16} has been terminated.

d. **Mode S Specific Services GICB Capability, Register 19_{16}:** (§2.2.25.3)

Within **FIVE** (5) seconds of the interrogation/reply sequence in Part 3.b., interrogate the transponder with the following GICB Extraction interrogation in order to extract the Register 19_{16} Mode S Specific Services GICB Capability:

REGISTER 19_{16} MODE S SPECIFIC SERVICES CAPABILITY GICB EXTRACTION EXTENDED DATA SOURCE INTERROGATION SETUP									
1 ---- 5	6 ---- 8	9 --- 13	14-16	17 -- 20	21 -- 24	25	26	27—28	29 --- 32
				"SD"					
"UF" =	**"PC" =**	**"RR" =**	**"DI" =**	**"IIS" =**	**"RRS =**	**"X" =**	**"LOS" =**	**"XX" =**	**"TMS" =**
4	0	**17** (11 HEX)	**7**	0	**9**	0	0	0	0

Verify that the transponder replies with a "**DF**" = **20** reply having:

Bit **65** (bit **33** of the **"MB"** field) set to "**1**" to indicate that Register 50_{16} servicing capability has been established during the power-on cycle.

e. **Mode S Specific Services GICB Capability, Register 18_{16}:** (§2.2.25.3.2.8 and 2.2.25.3.3)

Within **FIVE** (5) seconds of the interrogation/reply sequence in Part 3.b., Interrogate the transponder with the following GICB Extraction interrogation in order to extract the Register 18_{16} Mode S Specific Services GICB Capability:

REGISTER 18_{16} MODE S SPECIFIC SERVICES CAPABILITY GICB EXTRACTION EXTENDED DATA SOURCE INTERROGATION SETUP									
1 ---- 5	6 ---- 8	9 --- 13	14-16	17 -- 20	21 -- 24	25	26	27—28	29 --- 32
				"SD"					
"UF" =	**"PC" =**	**"RR" =**	**"DI" =**	**"IIS" =**	**"RRS =**	**"X" =**	**"LOS" =**	**"XX" =**	**"TMS" =**
4	0	**17** (11 HEX)	**7**	0	**8**	0	0	0	0

Verify that the transponder replies with a "**DF**" = **20** reply having:

(1). Bit **64** (bit **32** of the **"MB"** field) set to "**1**" to indicate that Register 19_{16} servicing capability has been established during the power-on cycle.

(2). Bit **65** (bit **33** of the **"MB"** field) set to **"1"** to indicate that Register 18_{16} servicing capability has been established during the power-on cycle.

(3). Bit **66** (bit **34** of the **"MB"** field) set to **"1"** to indicate that Register 17_{16} servicing capability has been established during the power-on cycle.

f. **Comm-B Broadcast Validation:** (§2.2.25.1.4)

Continue to interrogate the transponder with the following GICB Extraction interrogation in order to extract the Register 50_{16} - Track and Turn Report data monitor the **"DR"** field in the reply.

REGISTER 50_{16} TRACK AND TURN REPORT GICB EXTRACTION EXTENDED DATA SOURCE INTERROGATION SETUP									
1 ---- 5	6 ---- 8	9 --- 13	14-16	17 -- 20	21 -- 24	25	26	27—28	29 --- 32
				"SD"					
"UF" =	**"PC" =**	**"RR" =**	**"DI" =**	**"IIS" =**	**"RRS =**	**"X" =**	**"LOS" =**	**"XX" =**	**"TMS" =**
4	0	**21** (15 HEX)	**7**	0	**0**	0	0	0	0

Within **TEN** (10) seconds of providing the transponder with data as detailed in Part 3.a.,

Verify that the **"DR"** field in **DF=20** replies is set to **"DR" = 4, 5, 6**, or **7** to indicate that a Comm-B Broadcast is active.

g. **Comm-B Broadcast Extraction:** (§2.2.25.1.4)

After determining that the **"DR"** field has been set to **"DR"= 4, 5, 6,** or **7** in Part 3.f., interrogate the transponder with the following Comm-B Extraction interrogation in order to extract the Comm-B broadcast message which should be the Data Link Capability Report contained in Register 10_{16}.

COMM-B BROADCAST EXTRACTION INTERROGATION SETUP									
1 ---- 5	6 ---- 8	9 --- 13	14-16	17 -- 20	21 -- 24	25	26	27—28	29 --- 32
				"SD"					
"UF" =	**"PC" =**	**"RR" =**	**"DI" =**	**"IIS" =**	**"RRS =**	**"X" =**	**"LOS" =**	**"XX" =**	**"TMS" =**
4	0	**16** (10 HEX)	**7**	0	**0**	0	0	0	0

Verify that the transponder replies with a "**DF**" = **20** reply with:

(1). "DR" = 4 or 5 if TCAS Information **IS NOT** available

= 6 or 7 if TCAS Information **IS** available.

(2). Bit **33** –through- **40** (bit 1 –through- **8** of the "MB" field) set to 10 HEX (**0001 0000**).

(3). Bit **57** ["Mode S Specific Services Capability" (bit **25** of the "MB" field)] set to ONE (1) to indicate that the transponder has established Mode S Specific Services Capability during the power-on cycle.

(4). Bit **67** ["SIC" subfield (bit **35** of the "MB" field)] set to ONE (1) to indicate that the transponder does have "SI" capability.

(5). Bit **68** [Common Usage GICB Capability Report Bit (bit **36** of the **"MB"** field)] toggled to **"0"** (from **"1"**) to indicate that Register 17_{16} has changed.

h. **Comm-B Broadcast due to Data Link Capability Change Termination:** (§2.2.25.1.4)

Continue to interrogate the transponder with the interrogation described in Part 3. g. (e.g., the last step) until the transponder replies with a "DF" = 20 reply with "DR" NOT EQUAL to 4, 5, 6, or 7.

Verify that the elapsed time of the Test Timer started in Part 3.b.(2) is 18 +/- 1 second.

Note: *At this time, the "B" timer started in Part 3.b.(2). as broadcast due to a change in Data Link Capability should have terminated.*

2.7.6.4 PART 4: Register 50_{16} - Track and Turn Report - Data Change Validation - Set 2 (§2.2.25.6 and 2.2.25.6.1)

Notes:

1. *The primary intent of Part 4 beyond data validation in Register 50_{16} is to validate Declaration of Capability while starting Register 50_{16} Servicing with a single parameter, e.g., Roll Angle.*
2. *Review all subparagraphs of Part **4** prior to performing tests. This is necessary to establish the appropriate timing between changing data inputs and interrogations.*

a. **Data / Source Change - Set 2:** (§2.2.25.6.2)

(1). Roll Angle Data Input: (§2.2.25.6.2.1)

Via an appropriate input interface, provide the transponder with the following Roll Angle data at a minimum rate of 5 per second in order to provide appropriate Roll Angle information.

Roll Angle (degrees)			
[See Note 1]		[See Note 2]	
Data Value (degrees)	**Typical Binary Encoding**	**Rounded Input Data Value (degrees)**	**Rounded Input Encoding**
- 29.9981689 (330.0018311)	1_110 1010 1010 1011	-30.0585937 (329.9414063)	1_1 0101 0101

Notes:

1. ***Data Input Value*** *and* ***Typical Binary Encoding*** *represent the data as it is provided to the transponder in two's complement format. Sign Bit often referred to as 0 = Right Wing Down, 1 = -180 or Left Wing Down*

2. ***Rounded Input Data Value*** *and* ***Rounded Input Encoding*** *represent the data as it is expected to be seen in the* ***"MB"*** *field of Register* 50_{16}.

Data must be rounded a resolution of 0.17578125 degrees; therefore,

1_110 1010 101 0 1011
+ 000 0000 000 1 0000
1_110 1010 101 1 1010 = 1_1 0101 0101

Register 50_{16} ***"MB"*** *encoding = 1_1 0101 0101 (bits 2 through 11) (355 Hex)*
Note that Register 50_{16} *does not take the 90 degree bit: therefore, to get the real value of the 355 Hex encoding, the sign must be extended to result in the actual two's complement encoding of 755 Hex which is equivalent to 329.9414063 or -30.0585937 degrees.*

(2). True Track Angle Data Input: (§2.2.25.6.2.2)

Via an appropriate input interface, terminate provision of valid data to the transponder with True Track Angle data.

(3). Ground Speed Data Input: (§2.2.25.6.2.3)

Via an appropriate input interface, terminate provision of valid data to the transponder with Ground Speed data.

(4). Track Angle Rate Data Input: (§2.2.25.6.2.4)

Via an appropriate input interface, terminate provision of valid data to the transponder with Track Angle Rate data.

(5) True Airspeed Data Input: (§2.2.25.6.2.5)

Via an appropriate input interface, terminate provision of valid data to the transponder with True Airspeed data.

b. **Register 50_{16} Capability Verification:** (§2.2.25.6 –through- 2.2.25.6.3)

Within **1.3** seconds of providing the transponder with data as detailed in Part 4.a., interrogate the transponder with the following GICB Extraction interrogation in order to extract the Register 50_{16} - Track and Turn Report data.

REGISTER 50_{16} TRACK AND TURN REPORT GICB EXTRACTION EXTENDED DATA SOURCE INTERROGATION SETUP									
1 ---- 5	6 ---- 8	9 --- 13	14-16	17 -- 20	21 -- 24	25	26	27—28	29 --- 32
				"SD"					
"UF" =	**"PC" =**	**"RR" =**	**"DI" =**	**"IIS" =**	**"RRS =**	**"X" =**	**"LOS" =**	**"XX" =**	**"TMS" =**
4	0	**21** (15 HEX)	**7**	0	**0**	0	0	0	0

Notes:

1. *The interrogation should initiate the **"B"** timer for **18 ±1.0** seconds since a Comm-B Broadcast is initiated.*

2. *In this case, the Comm-B Broadcast is caused by the contents (e.g., servicing) of Register 50_{16} changing as Roll Angle data has been re-started. This change causes a change to Register 17_{16}, which then forces a change to Register 10_{16}, which then results in the initiation of the Comm-B Broadcast.*

(1). Verify that the transponder replies with a **"DF" = 20** reply.

(2). During replies to this interrogation sequence and subsequent interrogations during this test procedure, monitor the **"DR"** field. If the **"DR"** field changes to **4, 5, 6**, or **7**, then the transponder has initiated a Comm-B Broadcast.

When the **"DR"** field changes, start a Test Timer to monitor that the **"B"-**Timer runs for **18 ±1.0** seconds.

"DR" = 4 or 5 if TCAS Information IS NOT available

= 6 or 7 if TCAS Information IS available.

(3). Verify that the **DF=20** reply **"MB"** field provides Track and Turn Report Data as follows:

Part 4.b.(3) DF = 20, Track and Turn Report "MB" Field														
Reply Bits:	33	34	35 ---------- 43	44	45	46 ---- 55	56	57 -------- 66	67	68	69 ------- 77	78	79 ---------- 88
"MB" Bits:	1	2	3 ---------- 11	12	13	14 ----- 23	24	25 -------- 34	35	36	37 ------- 45	46	47 --------- 56
Field:	**Roll Angle**			**True Track Angle**			**Ground Speed**		**Track Angle Rate**			**True Airspeed**	
	Status	Sign	Data	Status	Sign	Data	Status	Data	Status	Sign	Data	Status	Data
Data:	1	1	1 0101 0101	0	0	00 0000 0000	0	00 0000 0000	0	0	0 0000 0000	0	00 0000 0000

c. **Common Usage GICB Capability Report, Register 17_{16}:** (§2.2.25.2.2.4 and 2.2.25.2.2.7)

Within **FIVE** (5) seconds of providing the transponder with data as detailed in Part 4.a., interrogate the transponder with the following GICB Extraction interrogation in order to extract the Register 17_{16} Common Usage GICB Capability Report:

REGISTER 17_{16} COMMON USAGE GICB CAPABILITY GICB EXTRACTION EXTENDED DATA SOURCE INTERROGATION SETUP									
1 ---- 5	6 ---- 8	9 --- 13	14-16	17 -- 20	21 -- 24	25	26	27—28	29 --- 32
				"SD"					
"UF" =	**"PC" =**	**"RR" =**	**"DI" =**	**"IIS" =**	**"RRS =**	**"X" =**	**"LOS" =**	**"XX" =**	**"TMS" =**
4	0	**17** (11 HEX)	**7**	0	**7**	0	0	0	0

Verify that the transponder replies with a "**DF**" = **20** reply having:

Bit **48** (bit **16** of the **"MB"** field) set to "**1**" to indicate that Register 50_{16} servicing capability has been re-started due to Roll Angle data being provided.

d. **Mode S Specific Services GICB Capability, Register 18_{16}:** (§2.2.25.3)

Within **FIVE** (5) seconds of providing the transponder with data as detailed in Part 4.a., interrogate the transponder with the following GICB Extraction interrogation in order to extract the Register 18_{16} Mode S Specific Services GICB Capability:

REGISTER 18_{16} MODE S SPECIFIC SERVICES CAPABILITY GICB EXTRACTION EXTENDED DATA SOURCE INTERROGATION SETUP									
1 ---- 5	6 ---- 8	9 --- 13	14-16	17 -- 20	21 -- 24	25	26	27—28	29 --- 32
				"SD"					
"UF" =	**"PC" =**	**"RR" =**	**"DI" =**	**"IIS" =**	**"RRS =**	**"X" =**	**"LOS" =**	**"XX" =**	**"TMS" =**
4	0	**17** (11 HEX)	**7**	0	**8**	0	0	0	0

Verify that the transponder replies with a "**DF**" = **20** reply having:

(1). Bit **64** (bit **32** of the **"MB"** field) set to "**1**" to indicate that Register 19_{16} servicing capability has been established during the power-on cycle.

(2). Bit **65** (bit **33** of the **"MB"** field) set to **"1"** to indicate that Register 18_{16} servicing capability has been established during the power-on cycle.

(3). Bit **66** (bit **34** of the **"MB"** field) set to **"1"** to indicate that Register 17_{16} servicing capability has been established during the power-on cycle.

e. **Mode S Specific Services GICB Capability, Register 19_{16}:** (§2.2.25.3.2.8 and 2.2.25.3.3)

Within **FIVE** (5) seconds of providing the transponder with data as detailed in Part 4.a., interrogate the transponder with the following GICB Extraction interrogation in order to extract the Register 19_{16} Mode S Specific Services GICB Capability:

REGISTER 19_{16} MODE S SPECIFIC SERVICES CAPABILITY GICB EXTRACTION EXTENDED DATA SOURCE INTERROGATION SETUP									
1 ---- 5	6 ---- 8	9 --- 13	14-16	17 -- 20	21 -- 24	25	26	27—28	29 --- 32
				"SD"					
"UF" =	**"PC" =**	**"RR" =**	**"DI" =**	**"IIS" =**	**"RRS =**	**"X" =**	**"LOS" =**	**"XX" =**	**"TMS" =**
4	0	**17** (11 HEX)	**7**	0	**9**	0	0	0	0

Verify that the transponder replies with a "**DF**" = **20** reply having:

Bit **65** (bit **33** of the **"MB"** field) set to "**1**" to indicate that Register 50_{16} servicing capability has been established during the power-on cycle.

f. **Comm-B Broadcast Validation:** (§2.2.25.1.4)

Continue to interrogate the transponder with the following GICB Extraction interrogation in order to extract the Register 50_{16} - Track and Turn Report data monitor the **"DR"** field in the reply.

REGISTER 50_{16} TRACK AND TURN REPORT GICB EXTRACTION EXTENDED DATA SOURCE INTERROGATION SETUP									
1 ---- 5	6 ---- 8	9 --- 13	14-16	17 -- 20	21 -- 24	25	26	27—28	29 --- 32
				"SD"					
"UF" =	**"PC" =**	**"RR" =**	**"DI" =**	**"IIS" =**	**"RRS =**	**"X" =**	**"LOS" =**	**"XX" =**	**"TMS" =**
4	0	**21** (15 HEX)	**7**	0	**0**	0	0	0	0

Within **TEN** (10) seconds of providing the transponder with data as detailed in Part 4.a.,

Verify that the **"DR"** field in **DF=20** replies is set to **"DR" = 4, 5, 6**, or **7** to indicate that a Comm-B Broadcast is active.

g. **Comm-B Broadcast Extraction:** (§2.2.25.1.4)

After determining that the **"DR"** field has been set to **"DR"= 4, 5, 6,** or **7** in Part 4.f., interrogate the transponder with the following Comm-B Extraction interrogation in order to extract the Comm-B broadcast message which should be the Data Link Capability Report contained in Register 10_{16}.

COMM-B BROADCAST EXTRACTION INTERROGATION SETUP									
1 ---- 5	6 ---- 8	9 --- 13	14-16	17 -- 20	21 -- 24	25	26	27—28	29 --- 32
				"SD"					
"UF" =	**"PC" =**	**"RR" =**	**"DI" =**	**"IIS" =**	**"RRS =**	**"X" =**	**"LOS" =**	**"XX" =**	**"TMS" =**
4	0	**16** (10 HEX)	**7**	0	**0**	0	0	0	0

Verify that the transponder replies with a "**DF**" = **20** reply having:

(1). "DR" = 4 or 5 if TCAS Information **IS NOT** available

= 6 or 7 if TCAS Information **IS** available.

(2). Bit **33** –through- **40** (bit 1 –through- **8** of the "MB" field) set to 10 HEX (**0001 0000**).

(3). Bit **57** ["Mode S Specific Services Capability" (bit **25** of the "MB" field)] set to ONE (1) to indicate that the transponder has established Mode S Specific Services Capability during the power-on cycle.

(4). Bit **67** ["SIC" subfield (bit **35** of the "MB" field)] set to ONE (1) to indicate that the transponder does have "SI" capability.

(5). Bit **68** [Common Usage GICB Capability Report Bit (bit **36** of the **"MB"** field)] toggled to **"1"** (from **"0"**) to indicate that Register 17_{16} has changed as servicing on Register 50_{16} has changed due to having Roll Angle data.

h. **Comm-B Broadcast due to Data Link Capability Change Termination:** (§2.2.25.1.4)

Continue to interrogate the transponder with the interrogation described in Part 4. g. (e.g., the last step) until the transponder replies with a "DF" = 20 reply with "DR" NOT EQUAL to 4, 5, 6, or 7.

Verify that the elapsed time of the Test Timer started in Part 4.b.(2) is 18 +/- 1 second.

Note: *At this time, the "B" timer started in Part 4.b.(2). as broadcast due to a change in Data Link Capability should have terminated.*

2.7.6.5 PART 5: Register 50_{16} - Track and Turn Report - Data Change Validation - Set 3 (§2.2.25.6 and 2.2.25.6.1)

Repeat **PART 3:**

2.7.6.6 PART 6: Register 50_{16} - Track and Turn Report - Data Change Validation - Set 4 (§2.2.25.6 and 2.2.25.6.1)

Notes:

1. *The primary intent of Part 6 beyond data validation in Register 50_{16} is to validate Declaration of Capability while starting Register 50_{16} Servicing with a single parameter, e.g., True Track Angle.*
2. *Review all subparagraphs of Part **6** prior to performing tests. This is necessary to establish the appropriate timing between changing data inputs and interrogations.*

a. **Data / Source Change - Set 4:** (§2.2.25.6.2)

(1). Roll Angle Data Input: (§2.2.25.6.2.1)

Via an appropriate input interface, terminate provision of valid data to the transponder with Roll Angle data.

(2). True Track Angle Data Input: (§2.2.25.6.2.2)

Via an appropriate input interface, provide the transponder with the following Track Angle (True) data at a minimum rate of 5 per second in order to provide appropriate True Track Angle information.

Track Angle (True) (degrees)			
[See Note 1]		[See Note 2]	
Data Value (degrees)	**Typical Binary Encoding**	**Rounded Input Data Value (degrees)**	**Rounded Input Encoding**
+ 59.9963379	0_ 010 1010 1010 1010	59.94140625	0_01 0101 0101

Notes:

1. ***Data Input Value*** *and* ***Typical Binary Encoding*** *represent the data as it is provided to the transponder in two's complement format. Sign Bit often referred to as 0 = East, 1 = West.*

2. ***Rounded Input Data Value*** *and* ***Rounded Input Encoding*** *represent the data as it is expected to be seen in the* ***"MB"*** *field of Register* 50_{16}.

Data must be rounded to a resolution of 0.17578125 degrees; therefore,

0_010 1010 101 0 1010
+ 000 0000 000 1 0000

0_ 010 1010 101 1 1010

Register 50_{16} ***"MB"*** *encoding = 0_01 0101 0101 (bits* ***13*** *through* ***23****) (155 Hex)*

(3). Ground Speed Data Input: (§2.2.25.6.2.3)

Via an appropriate input interface, terminate provision of valid data to the transponder with Ground Speed data.

(4). Track Angle Rate Data Input: (§2.2.25.6.2.4)

Via an appropriate input interface, terminate provision of valid data to the transponder with Track Angle Rate data.

(5) True Airspeed Data Input: (§2.2.25.6.2.5)

Via an appropriate input interface, terminate provision of valid data to the transponder with True Airspeed data.

b. **Register 50_{16} Capability Verification:** (§2.2.25.6 –through- 2.2.25.6.3)

Within **1.3** seconds of providing the transponder with data as detailed in Part 6.a., interrogate the transponder with the following GICB Extraction interrogation in order to extract the Register 50_{16} - Track and Turn Report data.

REGISTER 50_{16} TRACK AND TURN REPORT GICB EXTRACTION EXTENDED DATA SOURCE INTERROGATION SETUP									
1 ---- 5	6 ---- 8	9 --- 13	14-16	17 -- 20	21 -- 24	25	26	27—28	29 --- 32
				"SD"					
"UF" =	**"PC" =**	**"RR" =**	**"DI" =**	**"IIS" =**	**"RRS =**	**"X" =**	**"LOS" =**	**"XX" =**	**"TMS" =**
4	0	**21** (15 HEX)	**7**	0	**0**	0	0	0	0

Notes:

1. *The interrogation should initiate the **"B"** timer for **18 ±1.0** seconds since a Comm-B Broadcast is initiated.*

2. *In this case, the Comm-B Broadcast is caused by the contents (e.g., servicing) of Register 50_{16} changing as True Track Angle data has been re-started. This change causes a change to Register 17_{16}, which then forces a change to Register 10_{16}, which then results in the initiation of the Comm-B Broadcast.*

(1). Verify that the transponder replies with a **"DF" = 20** reply.

(2). During replies to this interrogation sequence and subsequent interrogations during this test procedure, monitor the **"DR"** field. If the **"DR"** field changes to **4, 5, 6**, or **7**, then the transponder has initiated a Comm-B Broadcast.

When the **"DR"** field changes, start a Test Timer to monitor that the **"B"-**Timer runs for **18 ±1.0** seconds.

"DR" = 4 or 5 if TCAS Information IS NOT available

= 6 or 7 if TCAS Information IS available.

(3). Verify that the **DF=20** reply **"MB"** field provides Track and Turn Report Data as follows:

Part 6.b.(3) DF = 20, Track and Turn Report "MB" Field													
Reply Bits:	33	34	35 ---------- 43	44	45	46 ---- 55	56	57 -------- 66	67	68	69 ------- 77	78	79 ---------- 88
"MB" Bits:	1	2	3 ---------- 11	12	13	14 ----- 23	24	25 -------- 34	35	36	37 ------- 45	46	47 --------- 56
Field:	**Roll Angle**			**True Track Angle**			**Ground Speed**		**Track Angle Rate**			**True Airspeed**	
	Status	Sign	Data	Status	Sign	Data	Status	Data	Status	Sign	Data	Status	Data
Data:	0	0	0 0000 0000	1	0	01 0101 0101	0	00 0000 0000	0	0	0 0000 0000	0	00 0000 0000

c. **Common Usage GICB Capability Report, Register 17_{16}:** (§2.2.25.2.2.4 and 2.2.25.2.2.7)

Within **FIVE** (5) seconds of providing the transponder with data as detailed in Part 6.a., interrogate the transponder with the following GICB Extraction interrogation in order to extract the Register 17_{16} Common Usage GICB Capability Report:

REGISTER 17_{16} COMMON USAGE GICB CAPABILITY GICB EXTRACTION EXTENDED DATA SOURCE INTERROGATION SETUP									
1 ---- 5	6 ---- 8	9 --- 13	14-16	17 -- 20	21 -- 24	25	26	27—28	29 --- 32
				"SD"					
"UF" =	**"PC" =**	**"RR" =**	**"DI" =**	**"IIS" =**	**"RRS =**	**"X" =**	**"LOS" =**	**"XX" =**	**"TMS" =**
4	0	**17** (11 HEX)	**7**	0	**7**	0	0	0	0

Verify that the transponder replies with a "**DF**" = **20** reply having:

Bit **48** (bit **16** of the **"MB"** field) set to "**1**" to indicate that Register 50_{16} servicing capability has been re-started due to True Track Angle data.

d. **Mode S Specific Services GICB Capability, Register 19_{16}:** (§2.2.25.3)

Within **FIVE** (5) seconds of providing the transponder with data as detailed in Part 6.a., interrogate the transponder with the following GICB Extraction interrogation in order to extract the Register 19_{16} Mode S Specific Services GICB Capability:

REGISTER 19_{16} MODE S SPECIFIC SERVICES CAPABILITY GICB EXTRACTION EXTENDED DATA SOURCE INTERROGATION SETUP									
1 ---- 5	6 ---- 8	9 --- 13	14-16	17 -- 20	21 -- 24	25	26	27—28	29 --- 32
				"SD"					
"UF" =	**"PC" =**	**"RR" =**	**"DI" =**	**"IIS" =**	**"RRS =**	**"X" =**	**"LOS" =**	**"XX" =**	**"TMS" =**
4	0	**17** (11 HEX)	**7**	0	**9**	0	0	0	0

Verify that the transponder replies with a "**DF**" = **20** reply having:

Bit **65** (bit **33** of the **"MB"** field) set to "**1**" to indicate that Register 50_{16} servicing capability has been established during the power-on cycle.

e. **Mode S Specific Services GICB Capability, Register 18_{16}:** (§2.2.25.3.2.8 and 2.2.25.3.3)

Within **FIVE** (5) seconds of providing the transponder with data as detailed in Part 6.a., interrogate the transponder with the following GICB Extraction interrogation in order to extract the Register 18_{16} Mode S Specific Services GICB Capability:

REGISTER 18_{16} MODE S SPECIFIC SERVICES CAPABILITY GICB EXTRACTION EXTENDED DATA SOURCE INTERROGATION SETUP									
1 ---- 5	6 ---- 8	9 --- 13	14-16	17 -- 20	21 -- 24	25	26	27—28	29 --- 32
				"SD"					
"UF" =	**"PC" =**	**"RR" =**	**"DI" =**	**"IIS" =**	**"RRS =**	**"X" =**	**"LOS" =**	**"XX" =**	**"TMS" =**
4	0	**17** (11 HEX)	**7**	0	**8**	0	0	0	0

Verify that the transponder replies with a "**DF**" = **20** reply having:

(1). Bit **64** (bit **32** of the **"MB"** field) set to "**1**" to indicate that Register 19_{16} servicing capability has been established during the power-on cycle.

(2). Bit **65** (bit **33** of the **"MB"** field) set to **"1"** to indicate that Register 18_{16} servicing capability has been established during the power-on cycle.

(3). Bit **66** (bit **34** of the **"MB"** field) set to **"1"** to indicate that Register 17_{16} servicing capability has been established during the power-on cycle.

f. **Comm-B Broadcast Validation:** (§2.2.25.1.4)

Continue to interrogate the transponder with the following GICB Extraction interrogation in order to extract the Register 50_{16} - Track and Turn Report data monitor the **"DR"** field in the reply.

REGISTER 50_{16} TRACK AND TURN REPORT GICB EXTRACTION EXTENDED DATA SOURCE INTERROGATION SETUP									
1 ---- 5	6 ---- 8	9 --- 13	14-16	17 -- 20	21 -- 24	25	26	27—28	29 --- 32
				"SD"					
"UF" =	**"PC" =**	**"RR" =**	**"DI" =**	**"IIS" =**	**"RRS =**	**"X" =**	**"LOS" =**	**"XX" =**	**"TMS" =**
4	0	**21** (15 HEX)	**7**	0	**0**	0	0	0	0

Within **TEN** (10) seconds of providing the transponder with data as detailed in Part 6.a.,

Verify that the **"DR"** field in **DF=20** replies is set to **"DR" = 4, 5, 6**, or **7** to indicate that a Comm-B Broadcast is active.

g. **Comm-B Broadcast Extraction:** (§2.2.25.1.4)

After determining that the **"DR"** field has been set to **"DR"= 4, 5, 6,** or **7** in Part 6.f., interrogate the transponder with the following Comm-B Extraction interrogation in order to extract the Comm-B broadcast message which should be the Data Link Capability Report contained in Register 10_{16}.

COMM-B BROADCAST EXTRACTION INTERROGATION SETUP									
1 ---- 5	6 ---- 8	9 --- 13	14-16	17 -- 20	21 -- 24	25	26	27—28	29 --- 32
				"SD"					
"UF" =	**"PC" =**	**"RR" =**	**"DI" =**	**"IIS" =**	**"RRS =**	**"X" =**	**"LOS" =**	**"XX" =**	**"TMS" =**
4	0	**16** (10 HEX)	**7**	0	**0**	0	0	0	0

Verify that the transponder replies with a "**DF**" = **20** reply having:

(1). "DR" = 4 or 5 if TCAS Information **IS NOT** available

= 6 or 7 if TCAS Information **IS** available.

(2). Bit **33** –through- **40** (bit 1 –through- **8** of the "MB" field) set to 10 HEX (**0001 0000**).

(3). Bit **57** ["Mode S Specific Services Capability" (bit **25** of the "MB" field)] set to ONE (1) to indicate that the transponder has established Mode S Specific Services Capability during the power-on cycle.

(4). Bit **67** ["SIC" subfield (bit **35** of the "MB" field)] set to ONE (1) to indicate that the transponder does have "SI" capability.

(5). Bit **68** [Common Usage GICB Capability Report Bit (bit **36** of the **"MB"** field)] toggled to **"1"** (from **"0"**) to indicate that Register 17_{16} has changed as servicing on Register 50_{16} has changed due to having True Track Angle data

h. **Comm-B Broadcast due to Data Link Capability Change Termination:** (§2.2.25.1.4)

Continue to interrogate the transponder with the interrogation described in Part 6. g. (e.g., the last step) until the transponder replies with a "DF" = 20 reply with "DR" NOT EQUAL to 4, 5, 6, or 7.

Verify that the elapsed time of the Test Timer started in Part 6.b.(2) is 18 +/- 1 second.

Note: *At this time, the "B" timer started in Part 6.b.(2). as broadcast due to a change in Data Link Capability should have terminated.*

2.7.6.7 PART 7: Register 50_{16} - Track and Turn Report - Data Change Validation - Set 5 (§2.2.25.6 and 2.2.25.6.1)

Repeat **PART 3**:

2.7.6.8 PART 8: Register 50_{16} - Track and Turn Report - Data Change Validation - Set 6 (§2.2.25.6 and 2.2.25.6.1)

Notes:

1. *The primary intent of Part **8** beyond data validation in Register 50_{16} is to validate Declaration of Capability while starting Register 50_{16} servicing with a single parameter, e.g., Ground Speed data.*
2. *Review all subparagraphs of Part **8** prior to performing tests. This is necessary to establish the appropriate timing between changing data inputs and interrogations.*

a. **Data / Source Change - Set 6:** (§2.2.25.6.2)

(1). Roll Angle Data Input: (§2.2.25.6.2.1)

Via an appropriate input interface, terminate provision of valid data to the transponder with Roll Angle data.

(2). True Track Angle Data Input: (§2.2.25.6.2.2)

Via an appropriate input interface, terminate provision of valid data to the transponder with True Track Angle data.

(3). Ground Speed Data Input: (§2.2.25.6.2.3)

Via an appropriate input interface, provide the transponder with the following Ground Speed data at a minimum rate of 5 per second in order to provide appropriate Ground Speed information.

Ground Speed (knots)			
[See Note 1]		**[See Note 2]**	
Data Value (knots)	**Typical Binary Encoding**	**Rounded Input Data Value (knots)**	**Rounded Input Encoding**
+ 1365.25	0_010 1010 1010 1010	**1364.00**	10 1010 1010

Notes:

1. ***Data Input Value*** *and* ***Typical Binary Encoding*** *represent the data as it is provided to the transponder in two's complement format. Sign Bit is always positive (e,g., = "0").*

2. ***Rounded Input Data Value*** *and* ***Rounded Input Encoding*** *represent the data as it is expected to be seen in the* ***"MB"*** *field of Register* 50_{16}.

Data must be rounded a resolution of 2.0 knots; therefore,

10 1010 1010 1010
+ 00 0000 0000 1000

10 1010 1011 0010

Register 50_{16} ***"MB"*** *encoding = 10 1010 1011 (bits* ***25*** *through* ***34****) (2AA Hex)*

(4). Track Angle Rate Data Input: (§2.2.25.6.2.4)

Via an appropriate input interface, terminate provision of valid data to the transponder with Track Angle Rate data.

(5) True Airspeed Data Input: (§2.2.25.6.2.5)

Via an appropriate input interface, terminate provision of valid data to the transponder with True Airspeed data.

b. **Register 50_{16} Capability Verification:** (§2.2.25.6 –through- 2.2.25.6.3)

Within **1.3** seconds of providing the transponder with data as detailed in Part 8.a., interrogate the transponder with the following GICB Extraction interrogation in order to extract the Register 50_{16} - Track and Turn Report data.

REGISTER 50_{16} TRACK AND TURN REPORT GICB EXTRACTION EXTENDED DATA SOURCE INTERROGATION SETUP									
1 ---- 5	6 ---- 8	9 --- 13	14-16	17 -- 20	21 -- 24	25	26	27—28	29 --- 32
				"SD"					
"UF" =	**"PC" =**	**"RR" =**	**"DI" =**	**"IIS" =**	**"RRS =**	**"X" =**	**"LOS" =**	**"XX" =**	**"TMS" =**
4	0	**21** (15 HEX)	**7**	0	**0**	0	0	0	0

Notes:

1. *The interrogation should initiate the **"B"** timer for **18 ±1.0** seconds since a Comm-B Broadcast is initiated.*

2. *In this case, the Comm-B Broadcast is caused by the contents (e.g., servicing) of Register 50_{16} changing as Ground Speed data has been re-started. This change causes a change to Register 17_{16}, which then forces a change to Register 10_{16}, which then results in the initiation of the Comm-B Broadcast.*

(1). Verify that the transponder replies with a **"DF" = 20** reply.

(2). During replies to this interrogation sequence and subsequent interrogations during this test procedure, monitor the **"DR"** field. If the **"DR"** field changes to **4, 5, 6**, or **7**, then the transponder has initiated a Comm-B Broadcast.

When the **"DR"** field changes, start a Test Timer to monitor that the **"B"-**Timer runs for **18 ±1.0** seconds.

"DR" = 4 or 5 if TCAS Information IS NOT available

= 6 or 7 if TCAS Information IS available.

(3). Verify that the **DF=20** reply **"MB"** field provides Track and Turn Report Data as follows:

Part 8.b.(3) DF = 20, Track and Turn Report "MB" Field													
Reply Bits:	33	34	35 ---------- 43	44	45	46 ---- 55	56	57 -------- 66	67	68	69 ------- 77	78	79 ---------- 88
"MB" Bits:	1	2	3 ---------- 11	12	13	14 ----- 23	24	25 -------- 34	35	36	37 ------- 45	46	47 --------- 56
Field:	**Roll Angle**			**True Track Angle**			**Ground Speed**		**Track Angle Rate**			**True Airspeed**	
	Status	Sign	Data	Status	Sign	Data	Status	Data	Status	Sign	Data	Status	Data
Data:	0	0	0 0000 0000	0	0	00 0000 0000	1	10 1010 1011	0	0	0 0000 0000	0	00 0000 0000

c. **Common Usage GICB Capability Report, Register 17_{16}:** (§2.2.25.2.2.4 and 2.2.25.2.2.7)

Within **FIVE** (5) seconds of providing the transponder with data as detailed in Part 8.a., interrogate the transponder with the following GICB Extraction interrogation in order to extract the Register 17_{16} Common Usage GICB Capability Report:

REGISTER 17_{16} COMMON USAGE GICB CAPABILITY GICB EXTRACTION EXTENDED DATA SOURCE INTERROGATION SETUP									
1 ---- 5	6 ---- 8	9 --- 13	14-16	17 -- 20	21 -- 24	25	26	27—28	29 --- 32
				"SD"					
"UF" =	**"PC" =**	**"RR" =**	**"DI" =**	**"IIS" =**	**"RRS =**	**"X" =**	**"LOS" =**	**"XX" =**	**"TMS" =**
4	0	**17** (11 HEX)	**7**	0	**7**	0	0	0	0

Verify that the transponder replies with a "**DF**" = **20** reply having:

Bit **48** (bit **16** of the **"MB"** field) set to "**1**" to indicate that Register 50_{16} servicing capability has been re-started due to Ground Speed data.

d. **Mode S Specific Services GICB Capability, Register 18_{16}:** (§2.2.25.3)

Within **FIVE** (5) seconds of providing the transponder with data as detailed in Part 8.a., interrogate the transponder with the following GICB Extraction interrogation in order to extract the Register 18_{16} Mode S Specific Services GICB Capability:

REGISTER 18_{16} MODE S SPECIFIC SERVICES CAPABILITY GICB EXTRACTION EXTENDED DATA SOURCE INTERROGATION SETUP									
1 ---- 5	6 ---- 8	9 --- 13	14-16	17 -- 20	21 -- 24	25	26	27—28	29 --- 32
				"SD"					
"UF" =	**"PC" =**	**"RR" =**	**"DI" =**	**"IIS" =**	**"RRS =**	**"X" =**	**"LOS" =**	**"XX" =**	**"TMS" =**
4	0	**17** (11 HEX)	**7**	0	**8**	0	0	0	0

Verify that the transponder replies with a "**DF**" = **20** reply having:

(1). Bit **64** (bit **32** of the **"MB"** field) set to "**1**" to indicate that Register 19_{16} servicing capability has been established during the power-on cycle.

(2). Bit **65** (bit **33** of the **"MB"** field) set to **"1"** to indicate that Register 18_{16} servicing capability has been established during the power-on cycle.

(3). Bit **66** (bit **34** of the **"MB"** field) set to **"1"** to indicate that Register 17_{16} servicing capability has been established during the power-on cycle.

e. **Mode S Specific Services GICB Capability, Register 19_{16}:** (§2.2.25.3.2.8 and 2.2.25.3.3)

Within **FIVE** (5) seconds of providing the transponder with data as detailed in Part 8.a., interrogate the transponder with the following GICB Extraction interrogation in order to extract the Register 19_{16} Mode S Specific Services GICB Capability:

REGISTER 19_{16} MODE S SPECIFIC SERVICES CAPABILITY GICB EXTRACTION EXTENDED DATA SOURCE INTERROGATION SETUP									
1 ---- 5	6 ---- 8	9 --- 13	14-16	17 -- 20	21 -- 24	25	26	27—28	29 --- 32
				"SD"					
"UF" =	**"PC" =**	**"RR" =**	**"DI" =**	**"IIS" =**	**"RRS =**	**"X" =**	**"LOS" =**	**"XX" =**	**"TMS" =**
4	0	**17** (11 HEX)	**7**	0	**9**	0	0	0	0

Verify that the transponder replies with a "**DF**" = **20** reply having:

Bit **65** (bit **33** of the **"MB"** field) set to "**1**" to indicate that Register 50_{16} servicing capability has been established during the power-on cycle.

f. **Comm-B Broadcast Validation:** (§2.2.25.1.4)

Continue to interrogate the transponder with the following GICB Extraction interrogation in order to extract the Register 50_{16} - Track and Turn Report data monitor the **"DR"** field in the reply.

REGISTER 50_{16} TRACK AND TURN REPORT GICB EXTRACTION EXTENDED DATA SOURCE INTERROGATION SETUP									
1 ---- 5	6 ---- 8	9 --- 13	14-16	17 -- 20	21 -- 24	25	26	27—28	29 --- 32
				"SD"					
"UF" =	**"PC" =**	**"RR" =**	**"DI" =**	**"IIS" =**	**"RRS =**	**"X" =**	**"LOS" =**	**"XX" =**	**"TMS" =**
4	0	**21** (15 HEX)	**7**	0	**0**	0	0	0	0

Within **TEN** (10) seconds of providing the transponder with data as detailed in Part 8.a.,

Verify that the **"DR"** field in **DF=20** replies is set to **"DR" = 4, 5, 6**, or **7** to indicate that a Comm-B Broadcast is active.

g. **Comm-B Broadcast Extraction:** (§2.2.25.1.4)

After determining that the **"DR"** field has been set to **"DR"= 4, 5, 6,** or **7** in Part 8.f., interrogate the transponder with the following Comm-B Extraction interrogation in order to extract the Comm-B broadcast message which should be the Data Link Capability Report contained in Register 10_{16}.

COMM-B BROADCAST EXTRACTION INTERROGATION SETUP									
1 ---- 5	6 ---- 8	9 --- 13	14-16	17 -- 20	21 -- 24	25	26	27—28	29 --- 32
				"SD"					
"UF" =	**"PC" =**	**"RR" =**	**"DI" =**	**"IIS" =**	**"RRS =**	**"X" =**	**"LOS" =**	**"XX" =**	**"TMS" =**
4	0	**16** (10 HEX)	**7**	0	**0**	0	0	0	0

Verify that the transponder replies with a "**DF**" = **20** reply having:

(1). "DR" = 4 or 5 if TCAS Information **IS NOT** available

= 6 or 7 if TCAS Information **IS** available.

(2). Bit **33** –through- **40** (bit 1 –through- **8** of the "MB" field) set to 10 HEX (**0001 0000**).

(3). Bit **57** ["Mode S Specific Services Capability" (bit **25** of the "MB" field)] set to ONE (1) to indicate that the transponder has established Mode S Specific Services Capability during the power-on cycle.

(4). Bit **67** ["SIC" subfield (bit **35** of the "MB" field)] set to ONE (1) to indicate that the transponder does have "SI" capability.

(5). Bit **68** [Common Usage GICB Capability Report Bit (bit **36** of the **"MB"** field)] toggled to **"1"** (from **"0"**) to indicate that Register 17_{16} has changed as servicing on Register 50_{16} has changed due to having Ground Speed data.

h. **Comm-B Broadcast due to Data Link Capability Change Termination:** (§2.2.25.1.4)

Continue to interrogate the transponder with the interrogation described in Part 8. g. (e.g., the last step) until the transponder replies with a "DF" = 20 reply with "DR" NOT EQUAL to 4, 5, 6, or 7.

Verify that the elapsed time of the Test Timer started in Part 8.b.(2) is 18 +/- 1 second.

Note: *At this time, the "B" timer started in Part 8.b.(2). as broadcast due to a change in Data Link Capability should have terminated.*

2.7.6.9 PART 9: Register 50_{16} - Track and Turn Report - Data Change Validation - Set 7 (§2.2.25.6 and 2.2.25.6.1)

Repeat **PART 3**:

2.7.6.10 PART 10: Register 50_{16} - Track and Turn Report - Data Change Validation - Set 8 (§2.2.25.6 and 2.2.25.6.1)

Notes:

1. *The primary intent of Part **10** beyond data validation in Register 50_{16} is to validate Declaration of Capability while starting Register 50_{16} servicing with a single parameter, e.g., Track Angle Rate data.*
2. *Review all subparagraphs of Part **10** prior to performing tests. This is necessary to establish the appropriate timing between changing data inputs and interrogations.*

a. **Data / Source Change - Set 8:** (§2.2.25.6.2)

(1). Roll Angle Data Input: (§2.2.25.6.2.1)

Via an appropriate input interface, terminate provision of valid data to the transponder with Roll Angle data.

(2). True Track Angle Data Input: (§2.2.25.6.2.2)

Via an appropriate input interface, terminate provision of valid data to the transponder with True Track Angle data.

(3). Ground Speed Data Input: (§2.2.25.6.2.3)

Via an appropriate input interface, terminate provision of valid data to the transponder with Ground Speed data.

(4). Track Angle Rate Data Input: (§2.2.25.6.2.4)

Via an appropriate input interface, provide the transponder with the following Track Angle Rate data at a minimum rate of 5 per second in order to provide appropriate Track Angle Rate information.

Track Angle Rate (degrees/second)			
[See Note 1]		**[See Note 2]**	
Data Value (degrees/second)	**Typical Binary Encoding**	**Rounded Input Data Value (degrees/second)**	**Rounded Input Encoding**
+ 10.65625	0__010 1010 1010	+10.65625	0_1 0101 0101

Notes:

1. ***Data Input Value*** *and* ***Typical Binary Encoding*** *represent the data as it is provided to the transponder in two's complement format. Sign Bit often referred to as 0 = Clockwise (CW) = Right, 1 = Counter-Clockwise (CCW) = Left.*

2. ***Rounded Input Data Value*** *and* ***Rounded Input Encoding*** *represent the data as it is expected to be seen in the* ***"MB"*** *field of Register* 50_{16}.

Data must be rounded a resolution of 0.03125 degrees; therefore,

```
  0_010 1010 101 0
+       000 0000 0001
  0_010 1010 101 1
```

Register 50_{16} ***"MB"*** *encoding = 0_1 0101 0101 (bit 36 through 45) (2AB Hex)*

(5) True Airspeed Data Input: (§2.2.25.6.2.5)

Via an appropriate input interface, terminate provision of valid data to the transponder with True Airspeed data.

b. **Register 50_{16} Capability Verification:** (§2.2.25.6 –through- 2.2.25.6.3)

Within **1.3** seconds of providing the transponder with data as detailed in Part 10.a., interrogate the transponder with the following GICB Extraction interrogation in order to extract the Register 50_{16} - Track and Turn Report data.

REGISTER 50_{16} TRACK AND TURN REPORT GICB EXTRACTION EXTENDED DATA SOURCE INTERROGATION SETUP									
1 ---- 5	6 ---- 8	9 --- 13	14-16	17 -- 20	21 -- 24	25	26	27—28	29 --- 32
				"SD"					
"UF" =	**"PC" =**	**"RR" =**	**"DI" =**	**"IIS" =**	**"RRS =**	**"X" =**	**"LOS" =**	**"XX" =**	**"TMS" =**
4	0	**21** (15 HEX)	**7**	0	**0**	0	0	0	0

Notes:

1. *The interrogation should initiate the **"B"** timer for **18 ±1.0** seconds since a Comm-B Broadcast is initiated.*

2. *In this case, the Comm-B Broadcast is caused by the contents (e.g., servicing) of Register 50_{16} changing as Ground Speed data has been re-started. This change causes a change to Register 17_{16}, which then forces a change to Register 10_{16}, which then results in the initiation of the Comm-B Broadcast.*

(1). Verify that the transponder replies with a **"DF" = 20** reply.

(2). During replies to this interrogation sequence and subsequent interrogations during this test procedure, monitor the **"DR"** field. If the **"DR"** field changes to **4, 5, 6**, or **7**, then the transponder has initiated a Comm-B Broadcast.

When the **"DR"** field changes, start a Test Timer to monitor that the **"B"-**Timer runs for **18 ±1.0** seconds.

"DR" = 4 or 5 if TCAS Information IS NOT available

= 6 or 7 if TCAS Information IS available.

(3). Verify that the **DF=20** reply **"MB"** field provides Track and Turn Report Data as follows:

Part 10.b.(3) DF = 20, Track and Turn Report "MB" Field													
Reply Bits:	33	34	35 ---------- 43	44	45	46 ---- 55	56	57 -------- 66	67	68	69 ------- 77	78	79 ---------- 88
"MB" Bits:	1	2	3 ---------- 11	12	13	14 ----- 23	24	25 -------- 34	35	36	37 ------- 45	46	47 --------- 56
Field:	**Roll Angle**			**True Track Angle**			**Ground Speed**		**Track Angle Rate**			**True Airspeed**	
	Status	Sign	Data	Status	Sign	Data	Status	Data	Status	Sign	Data	Status	Data
Data:	0	0	0 0000 0000	0	0	00 0000 0000	0	00 0000 0000	1	0	1 0101 0101	0	00 0000 0000

c. **Common Usage GICB Capability Report, Register 17_{16}:** (§2.2.25.2.2.4 and 2.2.25.2.2.7)

Within **FIVE** (5) seconds of providing the transponder with data as detailed in Part 10.a., interrogate the transponder with the following GICB Extraction interrogation in order to extract the Register 17_{16} Common Usage GICB Capability Report:

REGISTER 17_{16} COMMON USAGE GICB CAPABILITY GICB EXTRACTION EXTENDED DATA SOURCE INTERROGATION SETUP									
1 ---- 5	6 ---- 8	9 --- 13	14-16	17 -- 20	21 -- 24	25	26	27—28	29 --- 32
				"SD"					
"UF" =	**"PC" =**	**"RR" =**	**"DI" =**	**"IIS" =**	**"RRS =**	**"X" =**	**"LOS" =**	**"XX" =**	**"TMS" =**
4	0	**17** (11 HEX)	**7**	0	**7**	0	0	0	0

Verify that the transponder replies with a "**DF**" = **20** reply having:

Bit **48** (bit **16** of the **"MB"** field) set to "**1**" to indicate that Register 50_{16} servicing capability has been re-started due to Track Angle Rate data.

d. **Mode S Specific Services GICB Capability, Register 18_{16}:** (§2.2.25.3)

Within **FIVE** (5) seconds of providing the transponder with data as detailed in Part 10.a., interrogate the transponder with the following GICB Extraction interrogation in order to extract the Register 18_{16} Mode S Specific Services GICB Capability:

REGISTER 18_{16} MODE S SPECIFIC SERVICES CAPABILITY GICB EXTRACTION EXTENDED DATA SOURCE INTERROGATION SETUP									
1 ---- 5	6 ---- 8	9 --- 13	14-16	17 -- 20	21 -- 24	25	26	27—28	29 --- 32
				"SD"					
"UF" =	**"PC" =**	**"RR" =**	**"DI" =**	**"IIS" =**	**"RRS =**	**"X" =**	**"LOS" =**	**"XX" =**	**"TMS" =**
4	0	**17** (11 HEX)	**7**	0	**8**	0	0	0	0

Verify that the transponder replies with a "**DF**" = **20** reply having:

(1). Bit **64** (bit **32** of the **"MB"** field) set to "**1**" to indicate that Register 19_{16} servicing capability has been established during the power-on cycle.

(2). Bit **65** (bit **33** of the **"MB"** field) set to **"1"** to indicate that Register 18_{16} servicing capability has been established during the power-on cycle.

(3). Bit **66** (bit **34** of the **"MB"** field) set to **"1"** to indicate that Register 17_{16} servicing capability has been established during the power-on cycle.

e. **Mode S Specific Services GICB Capability, Register 19_{16}:** (§2.2.25.3.2.8 and 2.2.25.3.3)

Within **FIVE** (5) seconds of providing the transponder with data as detailed in Part 10.a., interrogate the transponder with the following GICB Extraction interrogation in order to extract the Register 19_{16} Mode S Specific Services GICB Capability:

REGISTER 19_{16} MODE S SPECIFIC SERVICES CAPABILITY GICB EXTRACTION EXTENDED DATA SOURCE INTERROGATION SETUP									
1 ---- 5	6 ---- 8	9 --- 13	14-16	17 -- 20	21 -- 24	25	26	27—28	29 --- 32
				"SD"					
"UF" =	**"PC" =**	**"RR" =**	**"DI" =**	**"IIS" =**	**"RRS =**	**"X" =**	**"LOS" =**	**"XX" =**	**"TMS" =**
4	0	**17** (11 HEX)	**7**	0	**9**	0	0	0	0

Verify that the transponder replies with a "**DF**" = **20** reply having:

Bit **65** (bit **33** of the **"MB"** field) set to "**1**" to indicate that Register 50_{16} servicing capability has been established during the power-on cycle.

f. **Comm-B Broadcast Validation:** (§2.2.25.1.4)

Continue to interrogate the transponder with the following GICB Extraction interrogation in order to extract the Register 50_{16} - Track and Turn Report data monitor the **"DR"** field in the reply.

REGISTER 50_{16} TRACK AND TURN REPORT GICB EXTRACTION EXTENDED DATA SOURCE INTERROGATION SETUP									
1 ---- 5	6 ---- 8	9 --- 13	14-16	17 -- 20	21 -- 24	25	26	27—28	29 --- 32
				"SD"					
"UF" =	**"PC" =**	**"RR" =**	**"DI" =**	**"IIS" =**	**"RRS =**	**"X" =**	**"LOS" =**	**"XX" =**	**"TMS" =**
4	0	**21** (15 HEX)	**7**	0	**0**	0	0	0	0

Within **TEN** (10) seconds of providing the transponder with data as detailed in Part 10.a.,

Verify that the **"DR"** field in **DF=20** replies is set to **"DR" = 4, 5, 6**, or **7** to indicate that a Comm-B Broadcast is active.

g. **Comm-B Broadcast Extraction:** (§2.2.25.1.4)

After determining that the **"DR"** field has been set to **"DR"= 4, 5, 6,** or **7** in Part 10.f., interrogate the transponder with the following Comm-B Extraction interrogation in order to extract the Comm-B broadcast message which should be the Data Link Capability Report contained in Register 10_{16}.

COMM-B BROADCAST EXTRACTION INTERROGATION SETUP									
1 ---- 5	6 ---- 8	9 --- 13	14-16	17 -- 20	21 -- 24	25	26	27—28	29 --- 32
				"SD"					
"UF" =	**"PC" =**	**"RR" =**	**"DI" =**	**"IIS" =**	**"RRS =**	**"X" =**	**"LOS" =**	**"XX" =**	**"TMS" =**
4	0	**16** (10 HEX)	**7**	0	**0**	0	0	0	0

Verify that the transponder replies with a "**DF**" = **20** reply having:

(1). "DR" = 4 or 5 if TCAS Information **IS NOT** available

= 6 or 7 if TCAS Information **IS** available.

(2). Bit **33** –through- **40** (bit 1 –through- **8** of the "MB" field) set to 10 HEX (**0001 0000**).

(3). Bit **57** ["Mode S Specific Services Capability" (bit **25** of the "MB" field)] set to ONE (1) to indicate that the transponder has established Mode S Specific Services Capability during the power-on cycle.

(4). Bit **67** ["SIC" subfield (bit **35** of the "MB" field)] set to ONE (1) to indicate that the transponder does have "SI" capability.

(5). Bit **68** [Common Usage GICB Capability Report Bit (bit **36** of the **"MB"** field)] toggled to **"1"** (from **"0"**) to indicate that Register 17_{16} has changed as servicing on Register 50_{16} has changed due to having Track Angle Rate data.

h. **Comm-B Broadcast due to Data Link Capability Change Termination:** (§2.2.25.1.4)

Continue to interrogate the transponder with the interrogation described in Part 10. g. (e.g., the last step) until the transponder replies with a "DF" = 20 reply with "DR" NOT EQUAL to 4, 5, 6, or 7.

Verify that the elapsed time of the Test Timer started in Part 10.b.(2) is 18 +/- 1 second.

Note: *At this time, the "B" timer started in Part 10.b.(2). as broadcast due to a change in Data Link Capability should have terminated.*

2.7.6.11 PART 11: Register 50_{16} - Track and Turn Report - Data Change Validation - Set 9 (§2.2.25.6 and 2.2.25.6.1)

Repeat **PART 3**:

2.7.6.12 PART 12: Register 50_{16} - Track and Turn Report - Data Change Validation - Set 10 (§2.2.25.6 and 2.2.25.6.1)

Notes:

1. *The primary intent of Part **12** beyond data validation in Register 50_{16} is to validate Declaration of Capability while starting Register 50_{16} servicing with a single parameter, e.g., True Airspeed data.*
2. *Review all subparagraphs of Part **12** prior to performing tests. This is necessary to establish the appropriate timing between changing data inputs and interrogations.*

a. **Data / Source Change - Set 10:** (§2.2.25.6.2)

(1). Roll Angle Data Input: (§2.2.25.6.2.1)

Via an appropriate input interface, terminate provision of valid data to the transponder with Roll Angle data.

(2). True Track Angle Data Input: (§2.2.25.6.2.2)

Via an appropriate input interface, terminate provision of valid data to the transponder with True Track Angle data.

(3). Ground Speed Data Input: (§2.2.25.6.2.3)

Via an appropriate input interface, terminate provision of valid data to the transponder with Ground Speed data.

(4). Track Angle Rate Data Input: (§2.2.25.6.2.4)

Via an appropriate input interface, terminate provision of valid data to the transponder with Track Angle Rate data.

(5) True Airspeed Data Input: (§2.2.25.6.2.5)

Via an appropriate input interface, provide the transponder with the following True Airspeed data at a minimum rate of 5 per second in order to provide appropriate True Airspeed information.

True Air Speed (knots) - ADS			
[See Note 1]		**[See Note 2,3]**	
Data Value (knots)	**Typical Binary Encoding**	**Rounded Input Data Value (knots)**	**Rounded Input Encoding**
682.625	0_010 1010 1010 1010	**1,366.00**	01 0101 0101

Notes:

*1. **Data Input Value** and **Typical Binary Encoding** represent the data as it is provided to the transponder in two's complement format. Sign Bit is always positive (e,g., = "0").*

*2. **Rounded Input Data Value** and **Rounded Input Encoding** represent the data as it is expected to be seen in the **"MB"** field of Register 50_{16}.*
Data must be rounded to a resolution of 2.0 knots; therefore:

0_010 1010 101 0 1010
+ 000 0000 000 1 0000

0_010 1010 101 1 1010 01 0101 0101

*Register 50_{16} **"MB"** encoding = 01 0101 0101 (bits **47** through **56**) (155 Hex)*

b. **Register 50_{16} Capability Verification:** (§2.2.25.6 –through- 2.2.25.6.3)

Within **1.3** seconds of providing the transponder with data as detailed in Part 12.a., interrogate the transponder with the following GICB Extraction interrogation in order to extract the Register 50_{16} - Track and Turn Report data.

REGISTER 50_{16} TRACK AND TURN REPORT GICB EXTRACTION EXTENDED DATA SOURCE INTERROGATION SETUP									
1 ---- 5	6 ---- 8	9 --- 13	14-16	17 -- 20	21 -- 24	25	26	27—28	29 --- 32
				"SD"					
"UF" =	"PC" =	"RR" =	"DI" =	"IIS" =	"RRS =	"X" =	"LOS" =	"XX" =	"TMS" =
4	0	**21** (15 HEX)	**7**	0	**0**	0	0	0	0

Notes:

1. *The interrogation should initiate the **"B"** timer for **18 ±1.0** seconds since a Comm-B Broadcast is initiated.*

2. *In this case, the Comm-B Broadcast is caused by the contents (e.g., servicing) of Register 50_{16} changing as True Airspeed data has been re-started. This change causes a change to Register 17_{16}, which then forces a change to Register 10_{16}, which then results in the initiation of the Comm-B Broadcast.*

(1). Verify that the transponder replies with a **"DF" = 20** reply.

(2). During replies to this interrogation sequence and subsequent interrogations during this test procedure, monitor the **"DR"** field. If the **"DR"** field changes to **4, 5, 6**, or **7**, then the transponder has initiated a Comm-B Broadcast.

When the **"DR"** field changes, start a Test Timer to monitor that the **"B"-**Timer runs for **18 ±1.0** seconds.

"DR" = 4 or 5 if TCAS Information IS NOT available

= 6 or 7 if TCAS Information IS available.

(3). Verify that the **DF=20** reply **"MB"** field provides Track and Turn Report Data as follows:

Part 12.b.(3) DF = 20, Track and Turn Report "MB" Field													
Reply Bits:	33	34	35 ---------- 43	44	45	46 ---- 55	56	57 -------- 66	67	68	69 ------- 77	78	79 ---------- 88
"MB" Bits:	1	2	3 ---------- 11	12	13	14 ----- 23	24	25 -------- 34	35	36	37 ------- 45	46	47 --------- 56
Field:	**Roll Angle**			**True Track Angle**			**Ground Speed**		**Track Angle Rate**			**True Airspeed**	
	Status	Sign	Data	Status	Sign	Data	Status	Data	Status	Sign	Data	Status	Data
Data:	0	0	0 0000 0000	0	0	00 0000 0000	0	00 0000 0000	0	0	0 0000 0000	1	01 0101 0101

c. **Common Usage GICB Capability Report, Register 17_{16}:** (§2.2.25.2.2.4 and 2.2.25.2.2.7)

Within **FIVE** (5) seconds of providing the transponder with data as detailed in Part 12.a., interrogate the transponder with the following GICB Extraction interrogation in order to extract the Register 17_{16} Common Usage GICB Capability Report:

REGISTER 17_{16} COMMON USAGE GICB CAPABILITY GICB EXTRACTION EXTENDED DATA SOURCE INTERROGATION SETUP									
1 ---- 5	6 ---- 8	9 --- 13	14-16	17 -- 20	21 -- 24	25	26	27—28	29 --- 32
				"SD"					
"UF" =	**"PC" =**	**"RR" =**	**"DI" =**	**"IIS" =**	**"RRS =**	**"X" =**	**"LOS" =**	**"XX" =**	**"TMS" =**
4	0	**17** (11 HEX)	**7**	0	**7**	0	0	0	0

Verify that the transponder replies with a "**DF**" = **20** reply having:

Bit **48** (bit **16** of the **"MB"** field) set to "**1**" to indicate that Register 50_{16} servicing capability has been re-started due to True Airspeed data.

d. **Mode S Specific Services GICB Capability, Register 18_{16}:** (§2.2.25.3)

Within **FIVE** (5) seconds of providing the transponder with data as detailed in Part 12.a., interrogate the transponder with the following GICB Extraction interrogation in order to extract the Register 18_{16} Mode S Specific Services GICB Capability:

REGISTER 18_{16} MODE S SPECIFIC SERVICES CAPABILITY GICB EXTRACTION EXTENDED DATA SOURCE INTERROGATION SETUP									
1 ---- 5	6 ---- 8	9 --- 13	14-16	17 -- 20	21 -- 24	25	26	27—28	29 --- 32
				"SD"					
"UF" =	**"PC" =**	**"RR" =**	**"DI" =**	**"IIS" =**	**"RRS =**	**"X" =**	**"LOS" =**	**"XX" =**	**"TMS" =**
4	0	**17** (11 HEX)	**7**	0	**8**	0	0	0	0

Verify that the transponder replies with a "**DF**" = **20** reply having:

(1). Bit **64** (bit **32** of the **"MB"** field) set to "**1**" to indicate that Register 19_{16} servicing capability has been established during the power-on cycle.

(2). Bit **65** (bit **33** of the **"MB"** field) set to **"1"** to indicate that Register 18_{16} servicing capability has been established during the power-on cycle.

(3). Bit **66** (bit **34** of the **"MB"** field) set to **"1"** to indicate that Register 17_{16} servicing capability has been established during the power-on cycle.

e. **Mode S Specific Services GICB Capability, Register 19_{16}:** (§2.2.25.3.2.8 and 2.2.25.3.3)

Within **FIVE** (5) seconds of providing the transponder with data as detailed in Part 12.a., interrogate the transponder with the following GICB Extraction interrogation in order to extract the Register 19_{16} Mode S Specific Services GICB Capability:

REGISTER 19_{16} MODE S SPECIFIC SERVICES CAPABILITY GICB EXTRACTION EXTENDED DATA SOURCE INTERROGATION SETUP									
1 ---- 5	6 ---- 8	9 --- 13	14-16	17 -- 20	21 -- 24	25	26	27—28	29 --- 32
				"SD"					
"UF" =	**"PC" =**	**"RR" =**	**"DI" =**	**"IIS" =**	**"RRS =**	**"X" =**	**"LOS" =**	**"XX" =**	**"TMS" =**
4	0	**17** (11 HEX)	**7**	0	**9**	0	0	0	0

Verify that the transponder replies with a "**DF**" = **20** reply having:

Bit **65** (bit **33** of the **"MB"** field) set to "**1**" to indicate that Register 50_{16} servicing capability has been established during the power-on cycle.

f. **Comm-B Broadcast Validation:** (§2.2.25.1.4)

Continue to interrogate the transponder with the following GICB Extraction interrogation in order to extract the Register 50_{16} - Track and Turn Report data monitor the **"DR"** field in the reply.

REGISTER 50_{16} TRACK AND TURN REPORT GICB EXTRACTION EXTENDED DATA SOURCE INTERROGATION SETUP									
1 ---- 5	6 ---- 8	9 --- 13	14-16	17 -- 20	21 -- 24	25	26	27—28	29 --- 32
				"SD"					
"UF" =	**"PC" =**	**"RR" =**	**"DI" =**	**"IIS" =**	**"RRS =**	**"X" =**	**"LOS" =**	**"XX" =**	**"TMS" =**
4	0	**21** (15 HEX)	**7**	0	**0**	0	0	0	0

Within **TEN** (10) seconds of providing the transponder with data as detailed in Part 12.a.,

Verify that the **"DR"** field in **DF=20** replies is set to **"DR" = 4, 5, 6**, or **7** to indicate that a Comm-B Broadcast is active.

g. **Comm-B Broadcast Extraction:** (§2.2.25.1.4)

After determining that the **"DR"** field has been set to **"DR"= 4, 5, 6,** or **7** in Part 12.f., interrogate the transponder with the following Comm-B Extraction interrogation in order to extract the Comm-B broadcast message which should be the Data Link Capability Report contained in Register 10_{16}.

COMM-B BROADCAST EXTRACTION INTERROGATION SETUP									
1 ---- 5	6 ---- 8	9 --- 13	14-16	17 -- 20	21 -- 24	25	26	27—28	29 --- 32
				"SD"					
"UF" =	**"PC" =**	**"RR" =**	**"DI" =**	**"IIS" =**	**"RRS =**	**"X" =**	**"LOS" =**	**"XX" =**	**"TMS" =**
4	0	**16** (10 HEX)	**7**	0	**0**	0	0	0	0

Verify that the transponder replies with a "**DF**" = **20** reply having:

(1). "DR" = 4 or 5 if TCAS Information **IS NOT** available

= 6 or 7 if TCAS Information **IS** available.

(2). Bit **33** –through- **40** (bit 1 –through- **8** of the "MB" field) set to 10 HEX (**0001 0000**).

(3). Bit **57** ["Mode S Specific Services Capability" (bit **25** of the "MB" field)] set to ONE (1) to indicate that the transponder has established Mode S Specific Services Capability during the power-on cycle.

(4). Bit **67** ["SIC" subfield (bit **35** of the "MB" field)] set to ONE (1) to indicate that the transponder does have "SI" capability.

(5). Bit **68** [Common Usage GICB Capability Report Bit (bit **36** of the **"MB"** field)] toggled to **"1"** (from **"0"**) to indicate that Register 17_{16} has changed as servicing on Register 50_{16} has changed due to having True Airspeed data.

h. **Comm-B Broadcast due to Data Link Capability Change Termination:** (§2.2.25.1.4)

Continue to interrogate the transponder with the interrogation described in Part 12. g. (e.g., the last step) until the transponder replies with a "DF" = 20 reply with "DR" NOT EQUAL to 4, 5, 6, or 7.

Verify that the elapsed time of the Test Timer started in Part 12.b.(2) is 18 +/- 1 second.

Note: *At this time, the "B" timer started in Part 12.b.(2). as broadcast due to a change in Data Link Capability should have terminated.*

2.7.6.13 PART 13: Register 50_{16} - Track and Turn Report - Data Change Validation - Sets 11 (§2.2.25.6 and 2.2.25.6.1)

a. **Data / Source Change - Sets 11:** (§2.2.25.6.2)

(1). Roll Angle Data Input: (§2.2.25.6.2.1)

For each line Item # in the following table (Table 13.a(1)), provide the transponder with Roll Angle data having a value as indicated in the "Data Value" (degrees) Column in the table.

Table 13.a(1): Register 50_{16} (Register 50_{16}) Roll Angle (degrees)								
Item #	**Type of Value**	**Generic Roll Angle Input (degrees) [Binary (BNR)]**			**Register 50_{16} (Register 50_{16}) Roll Angle (degrees)**			
		Status	**Sense (See Note 2)**	**Data Value (degrees)**	**Status (bit 1)**	**Sense (See Note 2)**	**Decimal Value (degrees)**	**Binary Value (bit 2 ----- 11) (See Note 3)**
1	Basic	Valid	Left (CCW)	- 29.88 (330.12)	1	Left	- 29.8828125 (330.1171875)	1_1 0101 0110
2	Basic	Valid	Right (CW)	59.94	1	Right	59.94140611	0_1 0101 0101
3	Basic	Valid	Left (CCW)	- 65.92 (294.08)	1	Left	65.91796875	1_0 1000 1001
4	Basic	Valid	Left (CCW)	-77.87 (282.13)	1	Left	- 77.8710944 (282.1289056)	1_0 0100 0101
5	Basic	Valid	Right (CW)	83.85	1	Right	83.84765606	0_1 1101 1101
6	Basic	Valid	Left (CCW)	- 41.84 (318.1600)	1	Left	- 41.8359375 (318.1640625)	1_1 0001 0010
7	Max	Valid	Left (CCW)	- 100.00 (260.00)	1	Left	-90 (270)	1_0 0000 0000
8	Min	Valid	Right (CW)	0	1	Left	0	0_0 0000 0000
9	Rounded (½ LSB)	Valid	Right (CW)	60.21	1	Right	60.29296875	0_1 0101 0111
10	Rounded (¼ LSB)	Valid	Right (CW)	59.98	1	Right	59.94140625	0_1 0101 0101
11	Invalid	Invalid	Not Applicable	0	0	N/A	0	0_0 0000 0000

Notes:

1. *Input data Sense refers to (a) Positive, being Clockwise (CW), commonly meaning Right Wing Down, or (b) Negative, being Counter-Clockwise (CCW), commonly meaning Left Wing Down.*

2. *Register 50_{16} Sense refers to (a)* ***"1"*** *for negative or Left Wing Down, or (b)* ***"0"*** *for positive or Right Wing Down.*

3. *Data is shown encoded with the "Sign Bit", e.g., bit* ***2*** *being to the left of the "Underscore".*

(2). True Track Angle Data Input: (§2.2.25.6.2.2)

For each line Item # in the following table (Table 13.a(2)), provide the transponder with True Track Angle data having a value as indicated in the "Data Value" (degrees) Column in the table.

Table 13.a(2): Register 50_{16} (Register 50_{16}) True Track Angle (degrees)								
Item #	**Type of Value**	**Generic True Track Angle Input (degrees) [Binary (BNR)]**			**Register 50_{16} (Register 50_{16}) True Track Angle (degrees)**			
		Status	**Sense (See Note 2)**	**Data Value (degrees)**	**Status (bit 12)**	**Sense (See Note 2)**	**Decimal Value (degrees)**	**Binary Value (bit 13 ----- 23) (See Note 3)**
1	Basic	Valid	Left (CCW)	- 120.10 (239.9)	1	Left	- 120.0585937 (239.9414063)	1_01 0101 0101
2	Basic	Valid	Right (CW)	119.90	1	Right	119.8828125	0_10 1010 1010
3	Basic	Valid	Left (CCW)	- 24.10 (335.9)	1	Left	- 24.0820312 (335.9179688)	1_11 0111 0111
4	Basic	Valid	Right (CW)	167.85	1	Right	167.8710938	0_11 1011 1011
5	Basic	Valid	Left (CCW)	- 96.15 (263.85)	1	Left	- 96.1523437 263.8476563	1_01 1101 1101
6	Basic	Valid	Left (CCW)	- 48.15 (311.85)	1	Left	- 48.1640625 (311.8359375)	1_10 1110 1110
7	Basic	Valid	Left (CCW)	- 0.20 (359.80)	1	Left	- 0.1757812 (359.8242188)	1_11 1111 1111
8	Basic	Valid	Right (CW)	0	1	Right	0	0_00 0000 0000
9	Rounded (½ LSB)	Valid	Right (CW)	60.25	1	Right	60.29296875	0_01 0101 0111
10	Rounded (¼ LSB)	Valid	Right (CW)	60.00	1	Right	59.94140625	0_01 0101 0101
11	Invalid	Invalid	Not Applicable	0	0	N/A	0	0_00 0000 0000

Notes:

1. *Input data Sense refers to (a) Positive, being Clockwise (CW), commonly meaning East of North, or (b) Negative, being Counter-Clockwise (CCW), commonly meaning West of North.*

2. *Register 50_{16} Sense refers to (a)* ***"1"*** *for negative or West, or (b)* ***"0"*** *for positive or East.*

3. *Data is shown encoded with the "Sign Bit", e.g., bit* ***13*** *being to the left of the "Underscore".*

(3). Ground Speed Data Input: (§2.2.25.6.2.3)

For each line Item # in the following table (Table 13.a(3)), provide the transponder with Ground Speed data having a value as indicated in the "Data Value" (degrees) Column in the table.

Table 13.a(3): Register 50_{16} (Register 50_{16}) Ground Speed (knots)						
Item #	**Type of Value**	**Generic Ground Speed (knots) [Binary (BNR)]**		**Register 50_{16} (Register 50_{16}) Ground Speed (knots)**		
		Status	**Data Value (knots)**	**Status (bit 24)**	**Decimal Value (knots)**	**Binary Value (bit 25 ----- 34)**
1	Basic	Valid	1,364	1	1,364	10 1010 1010
2	Basic	Valid	682	1	682	01 0101 0101
3	Basic	Valid	1,774	1	1,774	11 0111 0111
4	Basic	Valid	1,910	1	1,910	11 1011 1011
5	Basic	Valid	954	1	954	01 1101 1101
6	Basic	Valid	1,500	1	1,500	10 1110 1110
7	Max	Valid	3,006	1	2,046	11 1111 1111
8	Min	Valid	0	1	0	00 0000 0000
9	Rounded (½ LSB)	Valid	683	1	684	01 0101 0110
10	Rounded (¼ LSB)	Valid	682.5	1	682	01 0101 0101
11	Invalid	Invalid	Not Applicable	0	0	00 0000 0000

(4). Track Angle Rate Data Input: (§2.2.25.6.2.4)

For each line Item # in the following table (Table 13.a(4)), provide the transponder with Track Angle Rate data having a value as indicated in the "Data Value" (degrees) Column in the table.

Table 13.a(4): Register 50_{16} (Register 50_{16}) Track Angle Rate (degrees/second)

Item #	Type of Value	Generic Track Angle Rate Input (degrees/second) [Binary (BNR)]			Register 50_{16} (Register 50_{16}) Track Angle Rate (degrees/second)			
		Status	Sense (See Note 2)	Data Value (degrees)	Status (bit 35)	Sense (See Note 2)	Decimal Value (degrees)	Binary Value (bits 36 ---- 45) (See Note 3)
1	Basic	Valid	Left (CCW)	- 10.68	1	Left	- 10.6875	1_0 1010 1010
2	Basic	Valid	Right (CW)	10.65	1	Right	10.65625	0_1 0101 0101
3	Basic	Valid	Left (CCW)	- 4.275	1	Left	- 4.28125	1_1 0111 0111
4	Basic	Valid	Left (CCW)	- 2.16	1	Left	- 2.15625	1_1 1011 1011
5	Basic	Valid	Left (CCW)	14.91	1	Left	14.90625	0_1 1101 1101
6	Basic	Valid	Left (CCW)	- 8.565	1	Left	- 8.5625	1_0 1110 1110
7	Basic	Valid	Left (CCW)	-0.030	1	Left	- 0.03125	1_1 1111 1111
8	Basic	Valid	Right (CW)	0	1	Right	0	0_0 0000 0000
9	Rounded (½ LSB)	Valid	Right (CW)	10.68	1	Right	10.6875	0_1 0101 0110
10	Rounded (¼ LSB)	Valid	Right (CW)	10.665	1	Right	10.6875	0_1 0101 0110
11	Invalid	Invalid	Not Applicable	0	0	N/A	0	0_0 0000 0000

Notes:

1. *Input data Sense refers to (a) Positive, being Clockwise (CW), commonly meaning East of North, or (b) Negative, being Counter-Clockwise (CCW), commonly meaning West of North.*

2. *Register 50_{16} Sense refers to (a)* ***"1"*** *for negative or West, or (b)* ***"0"*** *for positive or East.*

3. *Data is shown encoded with the "Sign Bit", e.g., bit* ***36*** *being to the left of the "Underscore".*

(5) True Airspeed Data Input: (§2.2.25.6.2.5)

For each line Item # in the following table (Table 13.a(5)), provide the transponder with True Airspeed data having a value as indicated in the "Data Value" (degrees) Column in the table.

Table 13.a(5): Register 50_{16} (Register 50_{16}) True Airspeed (knots)						
Item #	**Type of Value**	**Generic True Airspeed (knots) [Binary (BNR)]**		**Register 50_{16} (Register 50_{16}) True Airspeed (knots)**		
		Status	**Data Value (knots)**	**Status (bit 46)**	**Decimal Value (knots)**	**Binary Value (bits 47 ---56)**
1	Basic	Valid	1,364	1	1,364	10 1010 1010
2	Basic	Valid	682	1	682	01 0101 0101
3	Basic	Valid	1,774	1	1,774	11 0111 0111
4	Basic	Valid	1,910	1	1,910	11 1011 1011
5	Basic	Valid	954	1	954	01 1101 1101
6	Basic	Valid	1,500	1	1,500	10 1110 1110
7	Max	Valid	3,006	1	2,046	11 1111 1111
8	Min	Valid	0	1	0	00 0000 0000
9	Rounded (½ LSB)	Valid	683.125	1	684	01 0101 0110
10	Rounded (¼ LSB)	Valid	682.625	1	682	01 0101 0101
11	Invalid	Invalid	Not Applicable	0	0	00 0000 0000

b. **<u>Register 50_{16} Capability Verification:</u>** (§2.2.25.6 –through- 2.2.25.6.3)

Within **1.3** seconds of providing the transponder with data as detailed in Part 13.a., interrogate the transponder with the following GICB Extraction interrogation in order to extract the Register 50_{16} - Track and Turn Report data.

REGISTER 50_{16} TRACK AND TURN REPORT GICB EXTRACTION EXTENDED DATA SOURCE INTERROGATION SETUP									
1 ---- 5	6 ---- 8	9 --- 13	14-16	17 -- 20	21 -- 24	25	26	27—28	29 --- 32
				"SD"					
"UF" =	**"PC" =**	**"RR" =**	**"DI" =**	**"IIS" =**	**"RRS =**	**"X" =**	**"LOS" =**	**"XX" =**	**"TMS" =**
4	0	**21** (15 HEX)	**7**	0	**0**	0	0	0	0

Verify that the transponder replies with a **"DF" = 20** reply.

(1). For each line Item # in Table 13.a(1) with **"MB"** field Status (bit **1**) equivalent to that shown in the Status (bit **1**) column of Table 13.a(1).

(2). For each line Item # in Table 13.a(1), with **"MB"** field bits **2** through **11** equivalent to that shown in the Binary Value (bit 2 - 11) column of Table 13.a(1).

(3). For each line Item # in Table 13.a(2) with **"MB"** field Status (bit **12**) equivalent to that shown in the Status (bit **14**) column of Table 14.a(2).

(4). For each line Item # in Table 13.a(2), with **"MB"** field bits **13** through **23** equivalent to that shown in the Binary Value (bits **13** - **23)** column of Table 13.a(2).

(5). For each line Item # in Table 13.a(3) with **"MB"** field Status (bit **24**) equivalent to that shown in the Status (bit **24**) column of Table 13.a(3).

(6). For each line Item # in Table 13.a(3), with **"MB"** field bits **25** through **34** equivalent to that shown in the Binary Value (bits **25** - **34**) column of Table 13.a(3).

(7). For each line Item # in Table 13.a(4) with **"MB"** field Status (bit **35**) equivalent to that shown in the Status (bit **35**) column of Table 13.a(4).

(8). For each line Item # in Table 13.a(4), with **"MB"** field bits **36** through **45** equivalent to that shown in the Binary Value (bits **36 - 45**) column of Table 13.a(4).

(9). For each line Item # in Table 13.a(5) with **"MB"** field Status (bit **46**) equivalent to that shown in the Status (bit **46**) column of Table 13.a(5).

(10). For each line Item # in Table 13.a(5), with **"MB"** field bits **47** through **56** equivalent to that shown in the Binary Value (bits **47 - 56**) column of Table 13.a(5).

Note: *Cumulative results are as shown in the following table.*

Part 13.b. DF = 20, Track and Turn Report "MB" Field													
Reply Bits:	33	34	35 ---------- 43	44	45	46 ---- 55	56	57 -------- 66	67	68	69 ------- 77	78	79 ---------- 88
"MB" Bits:	1	2	3 ---------- 11	12	13	14 ----- 23	24	25 -------- 34	35	36	37 ------- 45	46	47 --------- 56
Field:	**Roll Angle**			**True Track Angle**			**Ground Speed**		**Track Angle Rate**			**True Airspeed**	
Data: Item #	**Status**	**Sign**	**Data**	**Status**	**Sign**	**Data**	**Status**	**Data**	**Status**	**Sign**	**Data**	**Status**	**Data**
1	1	1	1 0101 0110	1	1	01 0101 0101	1	10 1010 1010	1	1	0 1010 1010	1	10 1010 1010
2	1	0	1 0101 0101	1	0	10 1010 1010	1	01 0101 0101	1	0	1 0101 0101	1	01 0101 0101
3	1	1	0 1000 1001	1	1	11 0111 0111	1	11 0111 0111	1	1	1 0111 0111	1	11 0111 0111
4	1	1	0 0100 0101	1	0	11 1011 1011	1	11 1011 1011	1	1	1 1011 1011	1	11 1011 1011
5	1	0	1 1101 1101	1	1	01 1101 1101	1	01 1101 1101	1	0	1 1101 1101	1	01 1101 1101
6	1	1	1 0001 0010	1	1	10 1110 1110	1	10 1110 1110	1	1	0 1110 1110	1	10 1110 1110
7	1	1	0 0000 0000	1	1	11 1111 1111	1	11 1111 1111	1	1	1 1111 1111	1	11 1111 1111
8	1	0	0 0000 0000	1	0	00 0000 0000	1	00 0000 0000	1	0	0 0000 0000	1	00 0000 0000
9	1	0	1 0101 0111	1	0	01 0101 0111	1	01 0101 0110	1	0	1 0101 0110	1	01 0101 0110
10	1	0	1 0101 0101	1	0	01 0101 0101	1	01 0101 0101	1	0	1 0101 0110	1	01 0101 0101
11	0	0	0 0000 0000	0	0	00 0000 0000	0	00 0000 0000	0	0	0 0000 0000	0	00 0000 0000

2.7.6.14 PART 14: Reduced Data Rate (§2.2.25.6.3)

Notes:

1. *The primary intent of Part 3 beyond data validation in Register 50_{16} is to validate Declaration of Capability as data inputs are reduced to rates that are less than the minimum acceptable rate.*

2. *Review all subparagraphs of Part **3** prior to performing tests. This is necessary to establish the appropriate timing between changing data inputs and interrogations.*

a. **Data / Source Change:** (§2.2.25.6.2)

(1). Roll Angle Data Input: (§2.2.25.6.2.1)

Via an appropriate input interface, set the rate at which valid Roll Angle data is provided to less than once in **2.6** seconds.

(2). True Track Angle Data Input: (§2.2.25.6.2.2)

Via an appropriate input interface, set the rate at which valid True Track Angle data is provided to less than once in **2.6** seconds.

(3). Ground Speed Data Input: (§2.2.25.6.2.3)

Via an appropriate input interface, set the rate at which valid Ground Speed data is provided to less than once in **2.6** seconds.

(4). Track Angle Rate Data Input: (§2.2.25.6.2.4)

Via an appropriate input interface, set the rate at which valid Track Angle Rate data is provided to less than once in **2.6** seconds.

(5) True Airspeed Data Input: (§2.2.25.6.2.5)

Via an appropriate input interface, set the rate at which valid True Airspeed data is provided to less than once in **2.6** seconds.

b. **Register 50_{16} Validation:** (§2.2.25.6 –through- 2.2.25.6.3)

Within **1.3** seconds of changing the data sources in Part 3.a, interrogate the transponder with the following GICB Extraction interrogation in order to extract the Register 50_{16} Track and Turn Report Data:

REGISTER 50_{16} TRACK AND TURN REPORT GICB EXTRACTION EXTENDED DATA SOURCE INTERROGATION SETUP									
1 ---- 5	6 ---- 8	9 --- 13	14-16	17 -- 20	21 -- 24	25	26	27—28	29 --- 32
				"SD"					
"UF" =	**"PC" =**	**"RR" =**	**"DI" =**	**"IIS" =**	**"RRS =**	**"X" =**	**"LOS" =**	**"XX" =**	**"TMS" =**
4	0	**21** (15 HEX)	**7**	0	**0**	0	0	0	0

Notes:

1. *The interrogation should initiate the **"B"** timer for **18 ±1.0** seconds since a Comm-B Broadcast is initiated.*

2. *In this case, the Comm-B Broadcast is caused by the contents (e.g., servicing) of Register 50_{16} changing as data for Register 50_{16} has effectively been terminated. This change causes a change to Register 17_{16}, which then forces a change to Register 10_{16}, which then results in the initiation of the Comm-B Broadcast.*

(1). Verify that the transponder replies with a **"DF" = 20** reply.

(2). During replies to this interrogation sequence and subsequent interrogations during this test procedure, monitor the **"DR"** field. If the **"DR"** field changes to **4, 5, 6,** or **7**, then the transponder has initiated a Comm-B Broadcast.

When the **"DR"** field changes, start a Test Timer to monitor that the **"B"**-Timer runs for **18 ±1.0** seconds.

"DR" = 4 or 5 if TCAS Information IS NOT available

= 6 or 7 if TCAS Information IS available.

(3). Verify that the **"DF"=20** reply **"MB"** field provides data with:

Part 3.b.(3) DF = 20, Track and Turn Report "MB" Field													
Reply Bits:	33	34	35 ---------- 43	44	45	46 ---- 55	56	57 -------- 66	67	68	69 ------- 77	78	79 ---------- 88
"MB" Bits:	1	2	3 ---------- 11	12	13	14 ----- 23	24	25 -------- 34	35	36	37 ------- 45	46	47 --------- 56
Field:	**Roll Angle**			**True Track Angle**			**Ground Speed**		**Track Angle Rate**			**True Airspeed**	
	Status	Sign	Data	Status	Sign	Data	Status	Data	Status	Sign	Data	Status	Data
Data:	0	0	0 0000 0000	0	0	00 0000 0000	0	00 0000 0000	0	0	0 0000 0000	0	00 0000 0000

c. **Common Usage GICB Capability Report, Register 17_{16}:** (§2.2.25.2.2.4 and 2.2.25.2.2.7)

Within **FIVE** (5) seconds of the interrogation/reply sequence in Part 3.b., interrogate the transponder with the following GICB Extraction interrogation in order to extract the Register 17_{16} Common Usage GICB Capability Report:

REGISTER 17_{16} COMMON USAGE GICB CAPABILITY GICB EXTRACTION EXTENDED DATA SOURCE INTERROGATION SETUP									
1 ---- 5	6 ---- 8	9 --- 13	14-16	17 -- 20	21 -- 24	25	26	27—28	29 --- 32
				"SD"					
"UF" =	**"PC" =**	**"RR" =**	**"DI" =**	**"IIS" =**	**"RRS =**	**"X" =**	**"LOS" =**	**"XX" =**	**"TMS" =**
4	0	**17** (11 HEX)	**7**	0	**7**	0	0	0	0

Verify that the transponder replies with a "**DF**" = **20** reply having:

Bit **48** (bit **16** of the **"MB"** field) set to "**0**" to indicate that Register 50_{16} servicing capability has been changed as data for Register 50_{16} has been terminated.

d. **Mode S Specific Services GICB Capability, Register 19_{16}:** (§2.2.25.3)

Within **FIVE** (5) seconds of the interrogation/reply sequence in Part 3.b., interrogate the transponder with the following GICB Extraction interrogation in order to extract the Register 19_{16} Mode S Specific Services GICB Capability:

REGISTER 19_{16} MODE S SPECIFIC SERVICES CAPABILITY GICB EXTRACTION EXTENDED DATA SOURCE INTERROGATION SETUP									
1 ---- 5	6 ---- 8	9 --- 13	14-16	17 -- 20	21 -- 24	25	26	27—28	29 --- 32
				"SD"					
"UF" =	**"PC" =**	**"RR" =**	**"DI" =**	**"IIS" =**	**"RRS =**	**"X" =**	**"LOS" =**	**"XX" =**	**"TMS" =**
4	0	**17** (11 HEX)	**7**	0	**9**	0	0	0	0

Verify that the transponder replies with a "**DF**" = **20** reply having:

Bit **65** (bit **33** of the **"MB"** field) set to "**1**" to indicate that Register 50_{16} servicing capability has been established during the power-on cycle.

e. **Mode S Specific Services GICB Capability, Register 18_{16}:** (§2.2.25.3.2.8 and 2.2.25.3.3)

Within **FIVE** (5) seconds of the interrogation/reply sequence in Part 3.b., Interrogate the transponder with the following GICB Extraction interrogation in order to extract the Register 18_{16} Mode S Specific Services GICB Capability:

REGISTER 18_{16} MODE S SPECIFIC SERVICES CAPABILITY GICB EXTRACTION EXTENDED DATA SOURCE INTERROGATION SETUP									
1 ---- 5	6 ---- 8	9 --- 13	14-16	17 -- 20	21 -- 24	25	26	27—28	29 --- 32
				"SD"					
"UF" =	**"PC" =**	**"RR" =**	**"DI" =**	**"IIS" =**	**"RRS =**	**"X" =**	**"LOS" =**	**"XX" =**	**"TMS" =**
4	0	**17** (11 HEX)	**7**	0	**8**	0	0	0	0

Verify that the transponder replies with a "**DF**" = **20** reply having:

(1). Bit **64** (bit **32** of the **"MB"** field) set to "**1**" to indicate that Register 19_{16} servicing capability has been established during the power-on cycle.

(2). Bit **65** (bit **33** of the **"MB"** field) set to **"1"** to indicate that Register 18_{16} servicing capability has been established during the power-on cycle.

(3). Bit **66** (bit **34** of the **"MB"** field) set to **"1"** to indicate that Register 17_{16} servicing capability has been established during the power-on cycle.

f. **Comm-B Broadcast Validation:** (§2.2.25.1.4)

Continue to interrogate the transponder with the following GICB Extraction interrogation in order to extract the Register 50_{16} - Track and Turn Report data monitor the **"DR"** field in the reply.

REGISTER 50_{16} TRACK AND TURN REPORT GICB EXTRACTION EXTENDED DATA SOURCE INTERROGATION SETUP									
1 ---- 5	6 ---- 8	9 --- 13	14-16	17 -- 20	21 -- 24	25	26	27—28	29 --- 32
				"SD"					
"UF" =	**"PC" =**	**"RR" =**	**"DI" =**	**"IIS" =**	**"RRS =**	**"X" =**	**"LOS" =**	**"XX" =**	**"TMS" =**
4	0	**21** (15 HEX)	**7**	0	**0**	0	0	0	0

Within **TEN** (10) seconds of providing the transponder with data as detailed in Part 3.a.,

Verify that the **"DR"** field in **DF=20** replies is set to **"DR" = 4, 5, 6**, or **7** to indicate that a Comm-B Broadcast is active.

g. **Comm-B Broadcast Extraction:** (§2.2.25.1.4)

After determining that the **"DR"** field has been set to **"DR"= 4, 5, 6,** or **7** in Part 3.f., interrogate the transponder with the following Comm-B Extraction interrogation in order to extract the Comm-B broadcast message which should be the Data Link Capability Report contained in Register 10_{16}.

COMM-B BROADCAST EXTRACTION INTERROGATION SETUP									
1 ---- 5	6 ---- 8	9 --- 13	14-16	17 -- 20	21 -- 24	25	26	27—28	29 --- 32
				"SD"					
"UF" =	**"PC" =**	**"RR" =**	**"DI" =**	**"IIS" =**	**"RRS =**	**"X" =**	**"LOS" =**	**"XX" =**	**"TMS" =**
4	0	**16** (10 HEX)	**7**	0	**0**	0	0	0	0

Verify that the transponder replies with a "**DF**" = **20** reply with:

(1). "DR" = 4 or 5 if TCAS Information **IS NOT** available

= 6 or 7 if TCAS Information **IS** available.

(2). Bit **33** –through- **40** (bit 1 –through- **8** of the "MB" field) set to 10 HEX (**0001 0000**).

(3). Bit **57** ["Mode S Specific Services Capability" (bit **25** of the "MB" field)] set to ONE (1) to indicate that the transponder has established Mode S Specific Services Capability during the power-on cycle.

(4). Bit **67** ["SIC" subfield (bit **35** of the "MB" field)] set to ONE (1) to indicate that the transponder does have "SI" capability.

(5). Bit **68** [Common Usage GICB Capability Report Bit (bit **36** of the **"MB"** field)] toggled to **"0"** (from **"1"**) to indicate that Register 17_{16} has changed.

h. **Comm-B Broadcast due to Data Link Capability Change Termination:** (§2.2.25.1.4)

Continue to interrogate the transponder with the interrogation described in Part 3. g. (e.g., the last step) until the transponder replies with a "DF" = 20 reply with "DR" NOT EQUAL to 4, 5, 6, or 7.

Verify that the elapsed time of the Test Timer started in Part 3.b.(2) is 18 +/- 1 second.

Note: *At this time, the "B" timer started in Part 3.b.(2). as broadcast due to a change in Data Link Capability should have terminated.*

RHS Commentary: *Added new Part 14 in order to test under reduced data rate conditions. Remove this commentary after making change to review copy.*

2.7.6.15 PART 15: Multiple Data Sources (§2.2.25 –through- 2.2.25.4, and 2.2.25.6)

If Multiple Data Sources of Register 50_{16} parameters are provided to the Unit-Under-Test (UUT), then **REPEAT** all applicable sections of Part **2** for each additional data source that was not tested while performing Parts **1** through **13** above.

2.7.7 Register 60_{16} – ENHANCED SURVEILLANCE - PROTOCOL AND INTERFACE (§2.2.25.8)

Introduction:

The intent of this procedure is to validate all aspects of Enhanced Surveillance Servicing of Register 60_{16}.

2.7.7.1 PART 1: Capability Verification (§2.2.25.8)

TEST PROCEDURE:

Note: *The primary intent of Part 1 is to validate appropriate capability declaration of No Capability prior to providing data to Register 60_{16}.*

Ensure that **NO** Flight Identification or Aircraft Registration data is being provided to the transponder.

Ensure that the TCAS / Transponder interface is NOT ACTIVE. If the interface is active, TCAS will provide data to set the Data Link Capability and thereby compromise the results of the following tests. Likewise, TCAS could attempt to set the Resolution Advisory Report and thereby compromise the results of the following tests.

Ensure that no other data is being provided to the transponder that could result in the loading of BDS registers internal to the transponder. This includes **NO** Servicing of Register 40_{16} and / or Register 50_{16}.

Disable the Extended Squitter function prior to starting the following procedures in order to keep from setting various BDS registers during the following tests.

a. **Register 60_{16} Initial Setting – Part A:** (§2.2.25.8)

Interrogate the transponder with the following GICB Extraction interrogation in order to extract the Register 60_{16} Heading and Speed Report.

REGISTER 60_{16} HEADING AND SPEED REPORT GICB EXTRACTION DATA SOURCE INTERROGATION SETUP					
1 ---- 5	6 ---- 8	9 --- 13	14-16	17 -- 20	21 ---------- 32
				"SD"	
"UF" =	**"PC" =**	**"RR" =**	**"DI" =**	**"IIS" =**	**"NOT ASSIGNED" =**
4	0	22 (16 HEX)	**0**	0	0

Verify that the transponder replies with a "DF" = 20 reply with Bit **33** –through- **88** ("BDS" subfield (bit **1** –through- **56** of the "MB" field)] set to ALL ZERO (0).

b. **Register 60_{16} Initial Setting – Part B:** (§2.2.25.8)

Interrogate the transponder with the following GICB Extraction interrogation in order to extract the Register 60_{16} Heading and Speed Report.

REGISTER 60_{16} HEADING AND SPEED REPORT GICB EXTRACTION EXTENDED DATA SOURCE INTERROGATION SETUP									
1 ---- 5	6 ---- 8	9 --- 13	14-16	17 -- 20	21 -- 24	25	26	27—28	29 --- 32
				"SD"					
"UF" =	**"PC" =**	**"RR" =**	**"DI" =**	**"IIS" =**	**"RRS =**	**"X" =**	**"LOS" =**	**"XX" =**	**"TMS" =**
4	0	**22** (16 HEX)	**7**	0	**0**	0	0	0	0

Verify that the transponder replies with the same content as required in section 2.7.7.1.a.

Note: *Two separate interrogations are used as Register 60_{16} can be extracted by using either the Data Source or Extended Data Source extraction protocols.*

c. **Data Link Capability Report, Register 10_{16}:** (§2.2.25.1)

Interrogate the transponder with the following GICB Extraction interrogation in order to extract the Register 10_{16} Data Link Capability Report.

REGISTER 10_{16} DATA LINK CAPABILITY GICB EXTRACTION DATA SOURCE INTERROGATION SETUP					
1 ---- 5	6 ---- 8	9 --- 13	14-16	17 -- 20	21 ---------- 32
				"SD"	
"UF" =	**"PC" =**	**"RR" =**	**"DI" =**	**"IIS" =**	**"NOT ASSIGNED" =**
4	0	**17** (11 HEX)	**0**	0	0

Verify that the transponder replies with a "**DF**" = **20** reply having:

(1). Bit **65 [**"**AIS**" subfield (bit **33** of the **"MB"** field)] set to "**0**" to indicate **NO** Flight Identification capability,

(2). Bit **57** [Mode S Specific Services Capability (bit **25** of the **"MB"** field)] set to "**1**" to indicate Mode S Specific Services Capability (This is because Register 10_{16} and Register 18_{16} are being serviced).

(3). Bit **67** [Surveillance Identifier **("SI"**) (bit **35** of the **"MB"** field)] set to **"1"** to indicate that the transponder **DOES** Have **"SI"** Capability,

(4). Bit **68** [Common Usage GICB Capability Report (bit **36** of the **"MB"** field)] set to **"0"** to indicate that there has been no change in the Common Usage GICB Capability Report, Register 17_{16}.

d. **Common Usage GICB Capability Report, Register 17_{16}:** (§2.2.25.2)

Interrogate the transponder with the following GICB Extraction interrogation in order to extract the Register 17_{16} Common Usage GICB Capability Report:

REGISTER 17_{16} COMMON USAGE GICB CAPABILITY GICB EXTRACTION EXTENDED DATA SOURCE INTERROGATION SETUP									
1 ---- 5	6 ---- 8	9 --- 13	14-16	17 -- 20	21 -- 24	25	26	27—28	29 --- 32
				"SD"					
"UF" =	**"PC" =**	**"RR" =**	**"DI" =**	**"IIS" =**	**"RRS =**	**"X" =**	**"LOS" =**	**"XX" =**	**"TMS" =**
4	0	**17** (11 HEX)	**7**	0	**7**	0	0	0	0

Verify that the transponder replies with a "**DF**" = **20** reply with:

(1). Bits **33** through **60** (bits **1** through **28** of the **"MB"** field) set to "**0**" to indicate **NO** Capability or capability changes in the Common Usage GICB Capability Report, Register 17_{16}.

(2). Bits **61** through **88** (bits **29** through **56** of the **"MB"** field) set to "**0**" since these bits are Reserved or **"Don't Care"**.

e. **Mode S Specific Services GICB Capability, Register 18_{16}:** (§2.2.25.3)

Interrogate the transponder with the following GICB Extraction interrogation in order to extract the Register 18_{16} Mode S Specific Services GICB Capability:

REGISTER 18_{16} MODE S SPECIFIC SERVICES CAPABILITY GICB EXTRACTION EXTENDED DATA SOURCE INTERROGATION SETUP									
1 ---- 5	6 ---- 8	9 --- 13	14-16	17 -- 20	21 -- 24	25	26	27—28	29 --- 32
				"SD"					
"UF" =	**"PC" =**	**"RR" =**	**"DI" =**	**"IIS" =**	**"RRS =**	**"X" =**	**"LOS" =**	**"XX" =**	**"TMS" =**
4	0	**17** (11 HEX)	**7**	0	**8**	0	0	0	0

Verify that the transponder replies with a "**DF**" = **20** reply with:

Bits **33** –through- **88** (bits **1** –through- **56** of the "MB" Field) set to ZERO (0) to indicate NO Capability has been established to service the BDS Codes designated in Register 18_{16}.

f. **Mode S Specific Services GICB Capability, Register 19_{16}:** (§2.2.25.3)

Interrogate the transponder with the following GICB Extraction interrogation in order to extract the Register 19_{16} Mode S Specific Services GICB Capability:

REGISTER 19_{16} MODE S SPECIFIC SERVICES CAPABILITY GICB EXTRACTION EXTENDED DATA SOURCE INTERROGATION SETUP									
1 ---- 5	6 ---- 8	9 --- 13	14-16	17 -- 20	21 -- 24	25	26	27—28	29 --- 32
				"SD"					
"UF" =	**"PC" =**	**"RR" =**	**"DI" =**	**"IIS" =**	**"RRS =**	**"X" =**	**"LOS" =**	**"XX" =**	**"TMS" =**
4	0	**17** (11 HEX)	**7**	0	**9**	0	0	0	0

Verify that the transponder replies with a "**DF**" = **20** reply with:

Bits **33** through **88** (bits **1** through **56** of the **"MB"** field) set to "**0**" to indicate **NO** Capability has been established to service the BDS Codes designated in Register 19_{16}.

g. **Mode S Specific Services GICB Capability, Register $1A_{16}$:** (§2.2.25.3)

Interrogate the transponder with the following GICB Extraction interrogation in order to extract the Register $1A_{16}$ Mode S Specific Services GICB Capability:

REGISTER $1A_{16}$ MODE S SPECIFIC SERVICES CAPABILITY GICB EXTRACTION EXTENDED DATA SOURCE INTERROGATION SETUP									
1 ---- 5	6 ---- 8	9 --- 13	14-16	17 -- 20	21 -- 24	25	26	27—28	29 --- 32
				"SD"					
"UF" =	**"PC" =**	**"RR" =**	**"DI" =**	**"IIS" =**	**"RRS =**	**"X" =**	**"LOS" =**	**"XX" =**	**"TMS" =**
4	0	**17** (11 HEX)	**7**	0	**A**	0	0	0	0

Verify that the transponder replies with a "**DF**" = **20** reply with:

Bits **33** through **88** (bits **1** through **56** of the **"MB"** field) set to "**0**" to indicate **NO** Capability has been established to service the BDS Codes designated in Register $1A_{16}$.

h. **Mode S Specific Services GICB Capability, Register $1B_{16}$:** (§2.2.25.3)

Interrogate the transponder with the following GICB Extraction interrogation in order to extract the Register $1B_{16}$ Mode S Specific Services GICB Capability:

REGISTER $1B_{16}$ MODE S SPECIFIC SERVICES CAPABILITY GICB EXTRACTION EXTENDED DATA SOURCE INTERROGATION SETUP									
1 ---- 5	6 ---- 8	9 --- 13	14-16	17 -- 20	21 -- 24	25	26	27—28	29 --- 32
				"SD"					
"UF" =	**"PC" =**	**"RR" =**	**"DI" =**	**"IIS" =**	**"RRS =**	**"X" =**	**"LOS" =**	**"XX" =**	**"TMS" =**
4	0	**17** (11 HEX)	**7**	0	**B**	0	0	0	0

Verify that the transponder replies with a "**DF**" = **20** reply with:

Bits **33** through **88** (bits **1** through **56** of the **"MB"** field) set to "**0**" to indicate **NO** Capability has been established to service the BDS Codes designated in Register $1B_{16}$.

i. **Mode S Specific Services GICB Capability, Register $1C_{16}$:** (§2.2.25.3)

Interrogate the transponder with the following GICB Extraction interrogation in order to extract the Register $1C_{16}$ Mode S Specific Services GICB Capability:

REGISTER $1C_{16}$ MODE S SPECIFIC SERVICES CAPABILITY GICB EXTRACTION EXTENDED DATA SOURCE INTERROGATION SETUP									
1 ---- 5	6 ---- 8	9 --- 13	14-16	17 -- 20	21 -- 24	25	26	27—28	29 --- 32
				"SD"					
"UF" =	**"PC" =**	**"RR" =**	**"DI" =**	**"IIS" =**	**"RRS =**	**"X" =**	**"LOS" =**	**"XX" =**	**"TMS" =**
4	0	**17** (11 HEX)	**7**	0	**C**	0	0	0	0

Verify that the transponder replies with a "**DF**" = **20** reply with:

Bits **33** through **88** (bits **1** through **56** of the **"MB"** field) set to "**0**" to indicate **NO** Capability has been established to service the BDS Codes designated in Register $1C_{16}$.

2.7.7.2 PART 2: Register 60_{16} - Heading and Speed Report Validation (§2.2.25.8 and 2.2.25.8.1)

Notes:

1. *The primary intent of Part 2 beyond data validation in Register 60_{16} is to validate capability declaration.*
2. *Review all subparagraphs of Part 2 prior to performing tests. This is necessary to establish the appropriate timing between changing data inputs and interrogations.*

a. **Data Input Initialization:** (§2.2.25.8.2)

(1). Magnetic Heading Data Input: (§2.2.25.8.2.1)

Via an appropriate input interface, provide the transponder with the following Magnetic Heading data at a minimum rate of 5 per second in order to provide appropriate Magnetic Heading information.

Magnetic Heading (degrees)			
[See Note 1]		[See Note 2,3]	
Data Value (degrees)	**Typical Binary Encoding**	**Rounded Input Data Value (degrees)**	**Rounded Input Encoding**
+ 119.9981689	0_101 0101 0101 0101	+ 120.0585938	0_10 1010 1011

Notes:

1. ***Data Input Value*** *and* ***Typical Binary Encoding*** *represent the data as it is provided to the transponder in two's complement format. Sign Bit often referred to as 0 = East, 1 = West.*

2. ***Rounded Input Data Value*** *and* ***Rounded Input Encoding*** *represent the data as it is expected to be seen in the* ***"MB"*** *field of Register* 60_{16}.

Data must be rounded to a resolution of 0.17578125 degrees; therefore,

0_101 0101 010 1 0101
+ 000 0000 000 1 0000

0_101 0101 011 0 0101

Register 60_{16} ***"MB"*** *encoding = 0_10 1010 1011 (bits* ***2*** *through* ***12****) (2AB Hex)*

3. *Data is shown encoded with the "Sign Bit", e.g., bit* ***2*** *being to the left of the "Underscore".*

(2). Indicated Airspeed Data Input - ADS: (§2.2.25.8.2.2)

Via an appropriate input interface, provide the transponder with the following Indicated Airspeed data at a minimum rate of 5 per second in order to provide appropriate Indicated Airspeed information.

Indicated Airspeed Speed (knots) - ADS			
[See Note 1]		[See Note 2]	
Data Value (knots)	**Typical Binary Encoding**	**Rounded Input Data Value (knots)**	**Rounded Input Encoding**
341.3125	0_01 0101 0101 0101	**341.00**	01 0101 0101

Notes:

1. ***Data Input Value*** *and* ***Typical Binary Encoding*** *represent the data as it is provided to the transponder in two's complement format. Sign Bit is always positive (e,g., = "0").*

2. ***Rounded Input Data Value*** *and* ***Rounded Input Encoding*** *represent the data as it is expected to be seen in the* ***"MB"*** *field of Register* 60_{16}.

Data must be rounded to a resolution of 1.0 knots; therefore,

01 0101 0101 0 101
+ 00 0000 0000 1 000
01 0101 0101 1 101

Register 60_{16} ***"MB"*** *encoding = 01 0101 0101 (bits* ***14*** *through* ***23****) (155 Hex)*

(3). Mach Data Input - ADS: (§2.2.25.8.2.3)

Via an appropriate input interface, provide the transponder with the following Mach data at a minimum rate of 5 per second in order to provide appropriate Mach information.

Mach (milli-Mach) - ADS			
[See Note 1]		**[See Note 2]**	
Data Value (mill-Mach)	**Typical Binary Encoding**	**Rounded Input Data Value (knots)**	**Rounded Input Encoding**
+1365.3125 (1.3653125 Mach)	0__0101 0101 0101 0101	**341.00**	01 0101 0101

Notes:

1. ***Data Input Value*** *and* ***Typical Binary Encoding*** *represent the data as it is provided to the transponder in two's complement format. Sign Bit is always positive (e,g., = "0").*

2. ***Rounded Input Data Value*** *and* ***Rounded Input Encoding*** *represent the data as it is expected to be seen in the* ***"MB"*** *field of Register* 60_{16}.
Data must be rounded to a resolution of 4 milli-mach; therefore,
0101 0101 0 1 01 0101
+ 0000 0000 0 0 10 0000
0101 0101 0 1 11 0101
Register 60_{16} ***"MB"*** *encoding = 01 0101 0101 (bits* ***25*** *through* ***34****) (155 Hex)*

(4). Barometric Altitude Rate Data Input - ADS: (§2.2.25.8.2.4)

Via an appropriate input interface, provide the transponder with the following Barometric Altitude Rate data at a minimum rate of 5 per second in order to provide appropriate Barometric Altitude Rate information.

Barometric Altitude Rate (feet/minute) - ADS			
[See Note 1]		**[See Note 2,3]**	
Barometric Altitude Rate (feet/minute)	**Typical Binary Encoding**	**Rounded Input Data Value (feet/minute)**	**Rounded Input Encoding**
+13,648.00	0__011 0101 0101	**13,648.00**	0_1 1010 1011

Notes:

1. ***Data Input Value*** *and* ***Typical Binary Encoding*** *represent the data as it is provided to the transponder in two's complement format. Sign Bit is* ***"0"*** *for* ***"UP"*** *and* ***"1"*** *for* ***"Down"****.*

2. ***Rounded Input Data Value*** *and* ***Rounded Input Encoding*** *represent the data as it is expected to be seen in the* ***"MB"*** *field of Register* 60_{16}.
Data must be rounded to a resolution of 32 feet/minute; therefore,
0_011 0101 01 0 1
+ 0_000 0000 00 0 1
0_011 0101 01 10
Register 60_{16} ***"MB"*** *encoding = 0_1 1010 1011 (bits* ***36*** *through* ***45****) (1AB Hex)*

3. *Data is shown encoded with the "Sign Bit", e.g., bit* ***36*** *being to the left of the "Underscore".*

(5). Inertial Vertical Rate Data Input - FMS / IRS: (§2.2.25.8.2.5)

Via an appropriate input interface, provide the transponder with the following Inertial Vertica Rate data at a minimum rate of 5 per second in order to provide appropriate Inertial Vertical Rate information.

Inertial Vertical Rate (feet/minute) - FMS / IRS			
[See Note 1]		**[See Note 2,3]**	
Inertial Vertical Rate (feet/minute)	**Typical Binary Encoding**	**Rounded Input Data Value (feet/minute)**	**Rounded Input Encoding**
+9,637.00	0__010 0101 1010 0101	**9,632.00**	0_1 0010 1101

Notes:

1. ***Data Input Value*** *and* ***Typical Binary Encoding*** *represent the data as it is provided to the transponder in two's complement format. Sign Bit is* ***"0"*** *for* ***"UP"*** *and* ***"1"*** *for* ***"Down"****.*

2. ***Rounded Input Data Value*** *and* ***Rounded Input Encoding*** *represent the data as it is expected to be seen in the* ***"MB"*** *field of Register* 60_{16}*.*
Data must be rounded to a resolution of 32 feet/minute; therefore,
0_010 0101 10 1 0 0101
+ 0_000 0000 00 0 1 0000
0_010 0101 10 1 1 0101
Register 60_{16} ***"MB"*** *encoding = 0_1 0010 1101 (bits* ***47*** *through* ***56****) (12D Hex)*

3. *Data is shown encoded with the "Sign Bit", e.g., bit* ***47*** *being to the left of the "Underscore".*

b. **Register 60_{16} Capability Verification:** (§2.2.25.8 –through- 2.2.25.8.3)

Within **1.3** seconds of providing the transponder with data as detailed in Part 2.a., interrogate the transponder with the following GICB Extraction interrogation in order to extract the Register 60_{16} - Heading and Speed Report data.

REGISTER 60_{16} HEADING AND SPEED REPORT GICB EXTRACTION EXTENDED DATA SOURCE INTERROGATION SETUP									
1 ---- 5	6 ---- 8	9 --- 13	14-16	17 -- 20	21 -- 24	25	26	27—28	29 --- 32
				"SD"					
"UF" =	**"PC" =**	**"RR" =**	**"DI" =**	**"IIS" =**	**"RRS =**	**"X" =**	**"LOS" =**	**"XX" =**	**"TMS" =**
4	0	**22** (16 HEX)	**7**	0	**0**	0	0	0	0

Notes:

1. *The interrogation should initiate the* ***"B"*** *timer for* ***18 ±1.0*** *seconds since a Comm-B Broadcast is initiated.*

2. *In this case, the Comm-B Broadcast is caused by the contents of Register* 60_{16} *changing. This change causes a change to Register* 17_{16}*, which then forces a change to Register* 10_{16}*, which then results in the initiation of the Comm-B Broadcast.*

(1). Verify that the transponder replies with a **"DF" = 20** reply.

(2). During replies to this interrogation sequence and subsequent interrogations during this test procedure, monitor the **"DR"** field. If the **"DR"** field changes to **4, 5, 6,** or **7**, then the transponder has initiated a Comm-B Broadcast.

When the **"DR"** field changes, start a Test Timer to monitor that the **"B"-**Timer runs for **18 ±1.0** seconds.

"DR" = 4 or 5 if TCAS Information IS NOT available

= 6 or 7 if TCAS Information IS available.

(3). Verify that the **"DF"=20** reply **"MB"** field provides Data with:

Part 2.b.(3) DF = 20, Heading and Speed "MB" Field													
Reply Bits:	33	34	35 ---------- 44	45	46 ---- 55	56	57 -------- 66	67	68	69 ------- 77	78	79	80 ---------- 88
"MB" Bits:	1	2	3 ---------- 12	13	14 ----- 23	24	25 -------- 34	35	36	37 ------- 45	46	47	48 --------- 56
Field:	**Magnetic Heading**			**Indicated Airspeed**		**Mach**		**Barometric Altitude Rate**			**Inertial Vertical Rate**		
	Status	Sign	Data	Status	Data	Status	Data	Status	Sign	Data	Status	Sign	Data
Data:	1	0	10 1010 1011	1	01 0101 0101	1	01 0101 0101	1	0	1 1010 1011	1	0	1 0010 1101

c. **<u>Common Usage GICB Capability Report, Register 17_{16}:</u>** (§2.2.25.2.2.6 and 2.2.25.2.2.7)

Within **FIVE** (5) seconds of providing the transponder with data as detailed in Part 2.a., interrogate the transponder with the following GICB Extraction interrogation in order to extract the Register 17_{16} Common Usage GICB Capability Report:

REGISTER 17_{16} COMMON USAGE GICB CAPABILITY GICB EXTRACTION EXTENDED DATA SOURCE INTERROGATION SETUP									
1 ---- 5	6 ---- 8	9 --- 13	14-16	17 -- 20	21 -- 24	25	26	27—28	29 --- 32
				"SD"					
"UF" =	**"PC" =**	**"RR" =**	**"DI" =**	**"IIS" =**	**"RRS =**	**"X" =**	**"LOS" =**	**"XX" =**	**"TMS" =**
4	0	**17** (11 HEX)	**7**	0	**7**	0	0	0	0

Verify that the transponder replies with a "**DF**" = **20** reply with:

Bit **56** (bit **24** of the **"MB"** field) set to "**1**" to indicate that Register 60_{16} servicing capability has been established and that data is valid.

d. **Mode S Specific Services GICB Capability, Register 18_{16}:** (§2.2.25.3)

Within **FIVE** (5) seconds of providing the transponder with data as detailed in Part 2.a., interrogate the transponder with the following GICB Extraction interrogation in order to extract the Register 18_{16} Mode S Specific Services GICB Capability:

REGISTER 18_{16} MODE S SPECIFIC SERVICES CAPABILITY GICB EXTRACTION EXTENDED DATA SOURCE INTERROGATION SETUP									
1 ---- 5	6 ---- 8	9 --- 13	14-16	17 -- 20	21 -- 24	25	26	27—28	29 --- 32
				"SD"					
"UF" =	**"PC" =**	**"RR" =**	**"DI" =**	**"IIS" =**	**"RRS =**	**"X" =**	**"LOS" =**	**"XX" =**	**"TMS" =**
4	0	**17** (11 HEX)	**7**	0	**8**	0	0	0	0

Verify that the transponder replies with a "**DF**" = **20** reply with:

(1). Bit **64** (bit **32** of the **"MB"** field) set to "**1**" to indicate that Register 19_{16} servicing capability has been established.

(2). Bit **65** (bit **33** of the **"MB"** field) set to **"1"** to indicate that Register 18_{16} servicing capability has been established.

(3). Bit **66** (bit **34** of the **"MB"** field) set to **"1"** to indicate that Register 17_{16} servicing capability has been established.

e. **Mode S Specific Services GICB Capability, Register 19_{16}:** (§2.2.25.3)

Within **FIVE** (5) seconds of providing the transponder with data as detailed in Part 2.a., interrogate the transponder with the following GICB Extraction interrogation in order to extract the Register 19_{16} Mode S Specific Services GICB Capability:

REGISTER 19_{16} MODE S SPECIFIC SERVICES CAPABILITY GICB EXTRACTION EXTENDED DATA SOURCE INTERROGATION SETUP									
1 ---- 5	6 ---- 8	9 --- 13	14-16	17 -- 20	21 -- 24	25	26	27—28	29 --- 32
				"SD"					
"UF" =	**"PC" =**	**"RR" =**	**"DI" =**	**"IIS" =**	**"RRS =**	**"X" =**	**"LOS" =**	**"XX" =**	**"TMS" =**
4	0	**17** (11 HEX)	**7**	0	**9**	0	0	0	0

Verify that the transponder replies with a "**DF**" = **20** reply with:

Bit **49** (bit **17** of the **"MB"** field) set to "**1**" to indicate that Register 60_{16} servicing capability has been established.

f. **Comm-B Broadcast Validation:** (§2.2.25.1.4)

Continue to interrogate the transponder with the following GICB Extraction interrogation in order to extract the Register 60_{16} - Heading and Speed Report data monitor the **"DR"** field in the reply.

REGISTER 60_{16} HEADING AND SPEED REPORT GICB EXTRACTION EXTENDED DATA SOURCE INTERROGATION SETUP									
1 ---- 5	6 ---- 8	9 --- 13	14-16	17 -- 20	21 -- 24	25	26	27—28	29 --- 32
				"SD"					
"UF" =	**"PC" =**	**"RR" =**	**"DI" =**	**"IIS" =**	**"RRS =**	**"X" =**	**"LOS" =**	**"XX" =**	**"TMS" =**
4	0	**22** (16 HEX)	**7**	0	**0**	0	0	0	0

Within **TEN** (10) seconds of providing the transponder with data as detailed in Part 2.a.,

Verify that the **"DR"** field in **DF=20** replies is set to **"DR" = 4, 5, 6**, or **7** to indicate that a Comm-B Broadcast is active.

g. **Comm-B Broadcast Extraction:** (§2.2.25.1.4)

After determining that the **"DR"** field has been set to **"DR"= 4, 5, 6,** or **7** in Part 2.f., interrogate the transponder with the following Comm-B Extraction interrogation in order to extract the Comm-B broadcast message which should be the Data Link Capability Report contained in Register 10_{16}.

COMM-B BROADCAST EXTRACTION INTERROGATION SETUP									
1 ---- 5	6 ---- 8	9 --- 13	14-16	17 -- 20	21 -- 24	25	26	27—28	29 --- 32
				"SD"					
"UF" =	**"PC" =**	**"RR" =**	**"DI" =**	**"IIS" =**	**"RRS =**	**"X" =**	**"LOS" =**	**"XX" =**	**"TMS" =**
4	0	**16** (10 HEX)	**7**	0	**0**	0	0	0	0

Verify that the transponder replies with a "**DF**" = **20** reply with:

(1). "DR" = 4 or 5 if TCAS Information **IS NOT** available

= 6 or 7 if TCAS Information **IS** available.

(2). Bit **33** –through- **40** (bit 1 –through- **8** of the "MB" field) set to 10 HEX (**0001 0000**).

(3). Bit **57** ["Mode S Specific Services Capability" (bit **25** of the "MB" field)] set to ONE (1) to indicate that the transponder has established Mode S Specific Services Capability.

(4). Bit **67** ["SIC" subfield (bit **35** of the "MB" field)] set to ONE (1) to indicate that the transponder does have "SI" capability.

(5). Bit **68** [Common Usage GICB Capability Report Bit (bit **36** of the **"MB"** field)] toggled to **"1"** (from **"0"**) to indicate that Register 17_{16} has changed.

h. **Comm-B Broadcast due to Data Link Capability Change Termination:** (§2.2.25.1.4)

Continue to interrogate the transponder with the interrogation described in Part 2. g. (e.g., the last step) until the transponder replies with a "DF" = 20 reply with "DR" NOT EQUAL to 4, 5, 6, or 7.

Verify that the elapsed time of the Test Timer started in Part 2.b.(2) is 18 +/- 1 second.

Note: *At this time, the "B" timer started in Part 2.b.(2). as broadcast due to a change in Data Link Capability should have terminated.*

2.7.7.3 PART 3: Register 60_{16} - Heading and Speed Report - Data Change Validation (§2.2.25.8 and 2.2.25.8.1)

Notes:

1. *The primary intent of Part 3 beyond data validation in Register 60_{16} is to validate Declaration of Capability as data has been terminated.*
2. *Review all subparagraphs of Part **3** prior to performing tests. This is necessary to establish the appropriate timing between changing data inputs and interrogations.*

a. **Data / Source Change - Set 1:** (§2.2.25.8.2)

(1). Magnetic Heading Data Input: (§2.2.25.8.2.1)

Via an appropriate input interface, terminate provision of valid data to the transponder with Magnetic Heading data.

(2). Indicated Airspeed Data Input - ADS: (§2.2.25.8.2.2)

Via an appropriate input interface, terminate provision of valid data to the transponder with Indicated Airspeed data.

(3). Mach Data Input - ADS: (§2.2.25.8.2.3)

Via an appropriate input interface, terminate provision of valid data to the transponder with Mach data.

(4). Barometric Altitude Rate Data Input - ADS: (§2.2.25.8.2.4)

Via an appropriate input interface, terminate provision of valid data to the transponder with Barometric Altitude Rate data.

(5). Inertial Vertical Rate Data Input - FMS / IRS: (§2.2.25.8.2.5)

Via an appropriate input interface, terminate provision of valid data to the transponder with Inertial Vertical Rate data.

b. **Register 60_{16} Capability Verification:** (§2.2.25.8 –through- 2.2.25.8.3)

Within **1.3** seconds of providing the transponder with data as detailed in Part 2.a., interrogate the transponder with the following GICB Extraction interrogation in order to extract the Register 60_{16} - Heading and Speed Report data.

REGISTER 60_{16} HEADING AND SPEED REPORT GICB EXTRACTION EXTENDED DATA SOURCE INTERROGATION SETUP									
1 ---- 5	6 ---- 8	9 --- 13	14-16	17 -- 20	21 -- 24	25	26	27—28	29 --- 32
				"SD"					
"UF" =	**"PC" =**	**"RR" =**	**"DI" =**	**"IIS" =**	**"RRS =**	**"X" =**	**"LOS" =**	**"XX" =**	**"TMS" =**
4	0	**22** (16 HEX)	**7**	0	**0**	0	0	0	0

Notes:

1. *The interrogation should initiate the **"B"** timer for **18 ±1.0** seconds since a Comm-B Broadcast is initiated.*

2. *In this case, the Comm-B Broadcast is caused by the contents of Register 60_{16} changing as provision of all parameter data has been terminated. This change causes a change to Register 17_{16}, which then forces a change to Register 10_{16}, which then results in the initiation of the Comm-B Broadcast.*

(1). Verify that the transponder replies with a **"DF" = 20** reply.

(2). During replies to this interrogation sequence and subsequent interrogations during this test procedure, monitor the **"DR"** field. If the **"DR"** field changes to **4, 5, 6,** or **7**, then the transponder has initiated a Comm-B Broadcast.

When the **"DR"** field changes, start a Test Timer to monitor that the **"B"-**Timer runs for **18 ±1.0** seconds.

"DR" = 4 or 5 if TCAS Information IS NOT available

= 6 or 7 if TCAS Information IS available.

(3). Verify that the **"DF"=20** reply **"MB"** field provides Data with:

Part 2.b.(3) DF = 20, Heading and Speed "MB" Field													
Reply Bits:	33	34	35 ---------- 44	45	46 ---- 55	56	57 -------- 66	67	68	69 ------- 77	78	79	80 ---------- 88
"MB" Bits:	1	2	3 ---------- 12	13	14 ----- 23	24	25 -------- 34	35	36	37 ------- 45	46	47	48 --------- 56
Field:	**Magnetic Heading**			**Indicated Airspeed**		**Mach**		**Barometric Altitude Rate**			**Inertial Vertical Rate**		
	Status	Sign	Data	Status	Data	Status	Data	Status	Sign	Data	Status	Sign	Data
Data:	0	0	00 0000 0000	0	00 0000 0000	0	00 0000 0000	0	0	0 0000 0000	0	0	0 0000 0000

c. **Common Usage GICB Capability Report, Register 17_{16}:** (§2.2.25.2.2.6 and 2.2.25.2.2.7)

Within **FIVE** (5) seconds of the interrogation / reply sequence in Part 3.b., interrogate the transponder with the following GICB Extraction interrogation in order to extract the Register 17_{16} Common Usage GICB Capability Report:

REGISTER 17_{16} COMMON USAGE GICB CAPABILITY GICB EXTRACTION EXTENDED DATA SOURCE INTERROGATION SETUP									
1 ---- 5	6 ---- 8	9 --- 13	14-16	17 -- 20	21 -- 24	25	26	27—28	29 --- 32
				"SD"					
"UF" =	**"PC" =**	**"RR" =**	**"DI" =**	**"IIS" =**	**"RRS =**	**"X" =**	**"LOS" =**	**"XX" =**	**"TMS" =**
4	0	**17** (11 HEX)	**7**	0	**7**	0	0	0	0

Verify that the transponder replies with a "**DF**" = **20** reply with:

Bit **56** (bit **24** of the **"MB"** field) set to "**0**" to indicate that Register 60_{16} servicing capability has been changed as data for Register 60_{16} has been terminated.

d. **Mode S Specific Services GICB Capability, Register 18_{16}:** (§2.2.25.3)

Within **FIVE** (5) seconds of the interrogation / reply sequence in Part 3.b., interrogate the transponder with the following GICB Extraction interrogation in order to extract the Register 18_{16} Mode S Specific Services GICB Capability:

REGISTER 18_{16} MODE S SPECIFIC SERVICES CAPABILITY GICB EXTRACTION EXTENDED DATA SOURCE INTERROGATION SETUP									
1 ---- 5	6 ---- 8	9 --- 13	14-16	17 -- 20	21 -- 24	25	26	27—28	29 --- 32
				"SD"					
"UF" =	**"PC" =**	**"RR" =**	**"DI" =**	**"IIS" =**	**"RRS =**	**"X" =**	**"LOS" =**	**"XX" =**	**"TMS" =**
4	0	**17** (11 HEX)	**7**	0	**8**	0	0	0	0

Verify that the transponder replies with a "**DF**" = **20** reply with:

(1). Bit **64** (bit **32** of the **"MB"** field) set to "**1**" to indicate that Register 19_{16} servicing capability has been established during the power-on cycle.

(2). Bit **65** (bit **33** of the **"MB"** field) set to **"1"** to indicate that Register 18_{16} servicing capability has been established during the power-on cycle.

(3). Bit **66** (bit **34** of the **"MB"** field) set to **"1"** to indicate that Register 17_{16} servicing capability has been established during the power-on cycle.

e. **Mode S Specific Services GICB Capability, Register 19_{16}:** (§2.2.25.3)

Within **FIVE** (5) seconds of the interrogation / reply sequence in Part 3.b., interrogate the transponder with the following GICB Extraction interrogation in order to extract the Register 19_{16} Mode S Specific Services GICB Capability:

REGISTER 19_{16} MODE S SPECIFIC SERVICES CAPABILITY GICB EXTRACTION EXTENDED DATA SOURCE INTERROGATION SETUP									
1 ---- 5	6 ---- 8	9 --- 13	14-16	17 -- 20	21 -- 24	25	26	27—28	29 --- 32
				"SD"					
"UF" =	**"PC" =**	**"RR" =**	**"DI" =**	**"IIS" =**	**"RRS =**	**"X" =**	**"LOS" =**	**"XX" =**	**"TMS" =**
4	0	**17** (11 HEX)	**7**	0	**9**	0	0	0	0

Verify that the transponder replies with a "**DF**" = **20** reply with:

Bit **49** (bit **17** of the **"MB"** field) set to "**1**" to indicate that Register 60_{16} servicing capability has been established during the power-on cycle.

f. **Comm-B Broadcast Validation:** (§2.2.25.1.4)

Continue to interrogate the transponder with the following GICB Extraction interrogation in order to extract the Register 60_{16} - Heading and Speed Report data monitor the **"DR"** field in the reply.

REGISTER 60_{16} HEADING AND SPEED REPORT GICB EXTRACTION EXTENDED DATA SOURCE INTERROGATION SETUP									
1 ---- 5	6 ---- 8	9 --- 13	14-16	17 -- 20	21 -- 24	25	26	27—28	29 --- 32
				"SD"					
"UF" =	**"PC" =**	**"RR" =**	**"DI" =**	**"IIS" =**	**"RRS =**	**"X" =**	**"LOS" =**	**"XX" =**	**"TMS" =**
4	0	**22** (16 HEX)	**7**	0	**0**	0	0	0	0

Within **TEN** (10) seconds of providing the transponder with data as detailed in Part 2.a.,

Verify that the **"DR"** field in **DF=20** replies is set to **"DR" = 4, 5, 6**, or **7** to indicate that a Comm-B Broadcast is active.

g. **Comm-B Broadcast Extraction:** (§2.2.25.1.4)

After determining that the **"DR"** field has been set to **"DR"= 4, 5, 6,** or **7** in Part 3.f., interrogate the transponder with the following Comm-B Extraction interrogation in order to extract the Comm-B broadcast message which should be the Data Link Capability Report contained in Register 10_{16}.

COMM-B BROADCAST EXTRACTION INTERROGATION SETUP									
1 ---- 5	6 ---- 8	9 --- 13	14-16	17 -- 20	21 -- 24	25	26	27—28	29 --- 32
				"SD"					
"UF" =	**"PC" =**	**"RR" =**	**"DI" =**	**"IIS" =**	**"RRS =**	**"X" =**	**"LOS" =**	**"XX" =**	**"TMS" =**
4	0	**16** (10 HEX)	**7**	0	**0**	0	0	0	0

Verify that the transponder replies with a "**DF**" = **20** reply with:

(1). "DR" = 4 or 5 if TCAS Information **IS NOT** available

= 6 or 7 if TCAS Information **IS** available.

(2). Bit **33** –through- **40** (bit 1 –through- **8** of the "MB" field) set to 10 HEX (**0001 0000**).

(3). Bit **57** ["Mode S Specific Services Capability" (bit **25** of the "MB" field)] set to ONE (1) to indicate that the transponder has established Mode S Specific Services Capability.

(4). Bit **67** ["SIC" subfield (bit **35** of the "MB" field)] set to ONE (1) to indicate that the transponder does have "SI" capability.

(5). Bit **68** [Common Usage GICB Capability Report Bit (bit **36** of the **"MB"** field)] toggled to **"0"** (from **"1"**) to indicate that Register 17_{16} has changed.

h. **Comm-B Broadcast due to Data Link Capability Change Termination:** (§2.2.25.1.4)

Continue to interrogate the transponder with the interrogation described in Part 3. g. (e.g., the last step) until the transponder replies with a "DF" = 20 reply with "DR" NOT EQUAL to 4, 5, 6, or 7.

Verify that the elapsed time of the Test Timer started in Part 3.b.(2) is 18 +/- 1 second.

Note: *At this time, the "B" timer started in Part 3.b.(2). as broadcast due to a change in Data Link Capability should have terminated.*

2.7.7.4 PART 4: Register 60_{16} - Heading and Speed Report - Data Change Validation - Set 2 (§2.2.25.8 and 2.2.25.8.1)

Notes:

1. *The primary intent of Part 4 beyond data validation in Register 60_{16} is to validate Declaration of Capability while starting Register 60_{16} servicing with a single parameter, e.g., Roll Angle.*
2. *Review all subparagraphs of Part **4** prior to performing tests. This is necessary to establish the appropriate timing between changing data inputs and interrogations.*

a. **Data / Source Change - Set 2:** (§2.2.25.8.2)

(1). Magnetic Heading Data Input: (§2.2.25.8.2.1)

Via an appropriate input interface, provide the transponder with the following Magnetic Heading data at a minimum rate of 5 per second in order to provide appropriate Magnetic Heading information.

Magnetic Heading (degrees)			
[See Note 1]		[See Note 2]	
Data Value (degrees)	**Typical Binary Encoding**	**Rounded Input Data Value (degrees)**	**Rounded Input Encoding**
- 120.0036621 - (239.9963379)	1_010 1010 1010 1010	- 120.0585937 (239.9414062)	1_01 0101 0101

Notes:

1. ***Data Input Value*** *and* ***Typical Binary Encoding*** *represent the data as it is provided to the transponder in two's complement format. Sign Bit often referred to as 0 = East, 1 = West.*

2. ***Rounded Input Data Value*** *and* ***Rounded Input Encoding*** *represent the data as it is expected to be seen in the* ***"MB"*** *field of Register* 60_{16}.

Data must be rounded to a resolution of 0.17578125 degrees; therefore,

1 010 1010 101 0 1010
+ 0 000 0000 000 1 0000
1 010 1010 101 1 1010

Register 60_{16} ***"MB"*** *encoding = 1_01 0101 0101 (bits* ***2*** *through* ***12****)* *(555 Hex)*

3. *Data is shown encoded with the "Sign Bit", e.g., bit* ***2*** *being to the left of the "Underscore".*

(2). Indicated Airspeed Data Input - ADS: (§2.2.25.8.2.2)

Via an appropriate input interface, terminate provision of valid data to the transponder with Indicated Airspeed data.

(3). Mach Data Input - ADS: (§2.2.25.8.2.3)

Via an appropriate input interface, terminate provision of valid data to the transponder with Mach data.

(4). Barometric Altitude Rate Data Input - ADS: (§2.2.25.8.2.4)

Via an appropriate input interface, terminate provision of valid data to the transponder with Barometric Altitude Rate data.

(5). Inertial Vertical Rate Data Input - FMS / IRS: (§2.2.25.8.2.5)

Via an appropriate input interface, terminate provision of valid data to the transponder with Inertial Vertical Rate data.

b. **Register 60_{16} Capability Verification:** (§2.2.25.8 –through- 2.2.25.8.3)

Within **1.3** seconds of providing the transponder with data as detailed in Part 4.a., interrogate the transponder with the following GICB Extraction interrogation in order to extract the Register 60_{16} - Heading and Speed Report data.

REGISTER 60_{16} HEADING AND SPEED REPORT GICB EXTRACTION EXTENDED DATA SOURCE INTERROGATION SETUP									
1 ---- 5	6 ---- 8	9 --- 13	14-16	17 -- 20	21 -- 24	25	26	27—28	29 --- 32
				"SD"					
"UF" =	**"PC" =**	**"RR" =**	**"DI" =**	**"IIS" =**	**"RRS =**	**"X" =**	**"LOS" =**	**"XX" =**	**"TMS" =**
4	0	**22** (16 HEX)	**7**	0	**0**	0	0	0	0

Notes:

1. *The interrogation should initiate the **"B"** timer for **18 ±1.0** seconds since a Comm-B Broadcast is initiated.*

2. *In this case, the Comm-B Broadcast is caused by the contents of Register 60_{16} changing as Magnetic Heading data has been re-started. This change causes a change to Register 17_{16}, which then forces a change to Register 10_{16}, which then results in the initiation of the Comm-B Broadcast.*

(1). Verify that the transponder replies with a **"DF" = 20** reply.

(2). During replies to this interrogation sequence and subsequent interrogations during this test procedure, monitor the **"DR"** field. If the **"DR"** field changes to **4, 5, 6,** or **7**, then the transponder has initiated a Comm-B Broadcast.

When the **"DR"** field changes, start a Test Timer to monitor that the **"B"-**Timer runs for **18 ±1.0** seconds.

"DR" = 4 or 5 if TCAS Information IS NOT available

= 6 or 7 if TCAS Information IS available.

(3). Verify that the **"DF"=20** reply **"MB"** field provides Data with:

Part 4.b.(3) DF = 20, Heading and Speed "MB" Field													
Reply Bits:	33	34	35 ---------- 44	45	46 ---- 55	56	57 -------- 66	67	68	69 ------- 77	78	79	80 ---------- 88
"MB" Bits:	1	2	3 ---------- 12	13	14 ----- 23	24	25 -------- 34	35	36	37 ------- 45	46	47	48 --------- 56
Field:	**Magnetic Heading**			**Indicated Airspeed**		**Mach**		**Barometric Altitude Rate**			**Inertial Vertical Rate**		
	Status	Sign	Data	Status	Data	Status	Data	Status	Sign	Data	Status	Sign	Data
Data:	1	1	01 0101 0101	0	00 0000 0000	0	00 0000 0000	0	0	0 0000 0000	0	0	0 0000 0000

c. **Common Usage GICB Capability Report, Register 17_{16}:** (§2.2.25.2.2.6 and 2.2.25.2.2.7)

Within **FIVE** (5) seconds of the interrogation / reply sequence in Part 4.b., interrogate the transponder with the following GICB Extraction interrogation in order to extract the Register 17_{16} Common Usage GICB Capability Report:

REGISTER 17_{16} COMMON USAGE GICB CAPABILITY GICB EXTRACTION EXTENDED DATA SOURCE INTERROGATION SETUP									
1 ---- 5	6 ---- 8	9 --- 13	14-16	17 -- 20	21 -- 24	25	26	27—28	29 --- 32
				"SD"					
"UF" =	**"PC" =**	**"RR" =**	**"DI" =**	**"IIS" =**	**"RRS =**	**"X" =**	**"LOS" =**	**"XX" =**	**"TMS" =**
4	0	**17** (11 HEX)	**7**	0	**7**	0	0	0	0

Verify that the transponder replies with a "**DF**" = **20** reply with:

Bit **56** (bit **24** of the **"MB"** field) set to "**1**" to indicate that Register 60_{16} servicing capability has been re-started due to Magnetic Heading data being provided.

d. **<u>Mode S Specific Services GICB Capability, Register 18_{16}:</u>** (§2.2.25.3)

Within **FIVE** (5) seconds of the interrogation / reply sequence in Part 4.b., interrogate the transponder with the following GICB Extraction interrogation in order to extract the Register 18_{16} Mode S Specific Services GICB Capability:

REGISTER 18_{16} MODE S SPECIFIC SERVICES CAPABILITY GICB EXTRACTION EXTENDED DATA SOURCE INTERROGATION SETUP									
1 ---- 5	6 ---- 8	9 --- 13	14-16	17 -- 20	21 -- 24	25	26	27—28	29 --- 32
				"SD"					
"UF" =	**"PC" =**	**"RR" =**	**"DI" =**	**"IIS" =**	**"RRS =**	**"X" =**	**"LOS" =**	**"XX" =**	**"TMS" =**
4	0	**17** (11 HEX)	**7**	0	**8**	0	0	0	0

Verify that the transponder replies with a "**DF**" = **20** reply with:

(1). Bit **64** (bit **32** of the **"MB"** field) set to "**1**" to indicate that Register 19_{16} servicing capability has been established during the power-on cycle.

(2). Bit **65** (bit **33** of the **"MB"** field) set to **"1"** to indicate that Register 18_{16} servicing capability has been established during the power-on cycle.

(3). Bit **66** (bit **34** of the **"MB"** field) set to **"1"** to indicate that Register 17_{16} servicing capability has been established during the power-on cycle.

e. **<u>Mode S Specific Services GICB Capability, Register 19_{16}:</u>** (§2.2.25.3)

Within **FIVE** (5) seconds of the interrogation / reply sequence in Part 4.b., interrogate the transponder with the following GICB Extraction interrogation in order to extract the Register 19_{16} Mode S Specific Services GICB Capability:

REGISTER 19_{16} MODE S SPECIFIC SERVICES CAPABILITY GICB EXTRACTION EXTENDED DATA SOURCE INTERROGATION SETUP									
1 ---- 5	6 ---- 8	9 --- 13	14-16	17 -- 20	21 -- 24	25	26	27—28	29 --- 32
				"SD"					
"UF" =	**"PC" =**	**"RR" =**	**"DI" =**	**"IIS" =**	**"RRS =**	**"X" =**	**"LOS" =**	**"XX" =**	**"TMS" =**
4	0	**17** (11 HEX)	**7**	0	**9**	0	0	0	0

Verify that the transponder replies with a "**DF**" = **20** reply with:

Bit **49** (bit **17** of the **"MB"** field) set to "**1**" to indicate that Register 60_{16} servicing capability has been established during the power-on cycle.

f. **Comm-B Broadcast Validation:** (§2.2.25.1.4)

Continue to interrogate the transponder with the following GICB Extraction interrogation in order to extract the Register 60_{16} - Heading and Speed Report data monitor the **"DR"** field in the reply.

REGISTER 60_{16} HEADING AND SPEED REPORT GICB EXTRACTION EXTENDED DATA SOURCE INTERROGATION SETUP									
1 ---- 5	6 ---- 8	9 --- 13	14-16	17 -- 20	21 -- 24	25	26	27—28	29 --- 32
				"SD"					
"UF" =	**"PC" =**	**"RR" =**	**"DI" =**	**"IIS" =**	**"RRS =**	**"X" =**	**"LOS" =**	**"XX" =**	**"TMS" =**
4	0	**22** (16 HEX)	**7**	0	**0**	0	0	0	0

Within **TEN** (10) seconds of providing the transponder with data as detailed in Part 4.a.,

Verify that the **"DR"** field in **DF=20** replies is set to **"DR" = 4, 5, 6**, or **7** to indicate that a Comm-B Broadcast is active.

g. **Comm-B Broadcast Extraction:** (§2.2.25.1.4)

After determining that the **"DR"** field has been set to **"DR"= 4, 5, 6,** or **7** in Part 4.f., interrogate the transponder with the following Comm-B Extraction interrogation in order to extract the Comm-B broadcast message which should be the Data Link Capability Report contained in Register 10_{16}.

COMM-B BROADCAST EXTRACTION INTERROGATION SETUP									
1 ---- 5	6 ---- 8	9 --- 13	14-16	17 -- 20	21 -- 24	25	26	27—28	29 --- 32
				"SD"					
"UF" =	**"PC" =**	**"RR" =**	**"DI" =**	**"IIS" =**	**"RRS =**	**"X" =**	**"LOS" =**	**"XX" =**	**"TMS" =**
4	0	**16** (10 HEX)	**7**	0	**0**	0	0	0	0

Verify that the transponder replies with a "**DF**" = **20** reply with:

(1). "DR" = 4 or 5 if TCAS Information **IS NOT** available

= 6 or 7 if TCAS Information **IS** available.

(2). Bit **33** –through- **40** (bit 1 –through- **8** of the "MB" field) set to 10 HEX (**0001 0000**).

(3). Bit **57** ["Mode S Specific Services Capability" (bit **25** of the "MB" field)] set to ONE (1) to indicate that the transponder has established Mode S Specific Services Capability.

(4). Bit **67** ["SIC" subfield (bit **35** of the "MB" field)] set to ONE (1) to indicate that the transponder does have "SI" capability.

(5). Bit **68** [Common Usage GICB Capability Report Bit (bit **36** of the **"MB"** field)] toggled to **"1"** (from **"0"**) to indicate that Register 17_{16} has changed servicing on Register 60_{16} has changed due to having Magnetic Heading data.

h. **Comm-B Broadcast due to Data Link Capability Change Termination:** (§2.2.25.1.4)

Continue to interrogate the transponder with the interrogation described in Part 4. g. (e.g., the last step) until the transponder replies with a "DF" = 20 reply with "DR" NOT EQUAL to 4, 5, 6, or 7.

Verify that the elapsed time of the Test Timer started in Part 4.b.(2) is 18 +/- 1 second.

Note: *At this time, the "B" timer started in Part 4.b.(2). as broadcast due to a change in Data Link Capability should have terminated.*

2.7.7.5 PART 5: Register 60_{16} - Heading and Speed Report - Data Change Validation - Set 3 (§2.2.25.8 and 2.2.25.8.1)

Repeat **PART 3:**

2.7.7.6 PART 6: Register 60_{16} - Heading and Speed Report - Data Change Validation - Set 4 (§2.2.25.8 and 2.2.25.8.1)

Notes:

1. *The primary intent of Part 6 beyond data validation in Register 60_{16} is to validate Declaration of Capability while starting Register 60_{16} Servicing with a single parameter, e.g., Indicated Airspeed.*
2. *Review all subparagraphs of Part **4** prior to performing tests. This is necessary to establish the appropriate timing between changing data inputs and interrogations.*

a. **Data / Source Change - Set 4:** (§2.2.25.8.2)

(1). Magnetic Heading Data Input: (§2.2.25.8.2.1)

Via an appropriate input interface, terminate provision of valid data to the transponder with Magnetic Heading data.

(2). Indicated Airspeed Data Input - ADS: (§2.2.25.8.2.2)

Via an appropriate input interface, provide the transponder with the following Indicated Airspeed data at a minimum rate of 5 per second in order to provide appropriate Indicated Airspeed information.

Indicated Airspeed Speed (knots) - ADS			
[See Note 1]		**[See Note 2]**	
Data Value (knots)	**Typical Binary Encoding**	**Rounded Input Data Value (knots)**	**Rounded Input Encoding**
682.625	0_10 1010 1010 1010	**683.00**	10 1010 1011

Notes:

*1. **Data Input Value** and **Typical Binary Encoding** represent the data as it is provided to the transponder in two's complement format. Sign Bit is always positive (e,g., = "0").*

*2. **Rounded Input Data Value** and **Rounded Input Encoding** represent the data as it is expected to be seen in the **"MB"** field of Register 60_{16}.*
Data must be rounded to a resolution of 1.0 knots; therefore,

```
    10 1010 1010 1 010
+   00 0000 0000 1 000
    10 1010 1011 0 010
```

*Register 60_{16} **"MB"** encoding = 10 1010 1011 (bits **14** through **23**) (2AB Hex)*

(3). Mach Data Input - ADS: (§2.2.25.8.2.3)

Via an appropriate input interface, terminate provision of valid data to the transponder with Mach data.

(4). Barometric Altitude Rate Data Input - ADS: (§2.2.25.8.2.4)

Via an appropriate input interface, terminate provision of valid data to the transponder with Barometric Altitude Rate data.

(5). Inertial Vertical Rate Data Input - FMS / IRS: (§2.2.25.8.2.5)

Via an appropriate input interface, terminate provision of valid data to the transponder with Inertial Vertical Rate data.

b. **Register 60_{16} Capability Verification:** (§2.2.25.8 –through- 2.2.25.8.3)

Within **1.3** seconds of providing the transponder with data as detailed in Part 6.a., interrogate the transponder with the following GICB Extraction interrogation in order to extract the Register 60_{16} - Heading and Speed Report data.

REGISTER 60_{16} HEADING AND SPEED REPORT GICB EXTRACTION EXTENDED DATA SOURCE INTERROGATION SETUP									
1 ---- 5	6 ---- 8	9 --- 13	14-16	17 -- 20	21 -- 24	25	26	27—28	29 --- 32
				"SD"					
"UF" =	**"PC" =**	**"RR" =**	**"DI" =**	**"IIS" =**	**"RRS =**	**"X" =**	**"LOS" =**	**"XX" =**	**"TMS" =**
4	0	**22** (16 HEX)	**7**	0	**0**	0	0	0	0

Notes:

1. *The interrogation should initiate the **"B"** timer for **18 ±1.0** seconds since a Comm-B Broadcast is initiated.*

2. *In this case, the Comm-B Broadcast is caused by the contents of Register 60_{16} changing as Indicated Airspeed data has been re-started. This change causes a change to Register 17_{16}, which then forces a change to Register 10_{16}, which then results in the initiation of the Comm-B Broadcast.*

(1). Verify that the transponder replies with a **"DF" = 20** reply.

(2). During replies to this interrogation sequence and subsequent interrogations during this test procedure, monitor the **"DR"** field. If the **"DR"** field changes to **4, 5, 6,** or **7**, then the transponder has initiated a Comm-B Broadcast.

When the **"DR"** field changes, start a Test Timer to monitor that the **"B"-**Timer runs for **18 ±1.0** seconds.

"DR" = 4 or 5 if TCAS Information IS NOT available

= 6 or 7 if TCAS Information IS available.

(3). Verify that the **"DF"=20** reply **"MB"** field provides Data with:

Part 6.b.(3) DF = 20, Heading and Speed "MB" Field													
Reply Bits:	33	34	35 ---------- 44	45	46 ---- 55	56	57 -------- 66	67	68	69 ------- 77	78	79	80 ---------- 88
"MB" Bits:	1	2	3 ---------- 12	13	14 ----- 23	24	25 -------- 34	35	36	37 ------- 45	46	47	48 --------- 56
Field:	**Magnetic Heading**			**Indicated Airspeed**		**Mach**		**Barometric Altitude Rate**			**Inertial Vertical Rate**		
	Status	Sign	Data	Status	Data	Status	Data	Status	Sign	Data	Status	Sign	Data
Data:	0	0	00 0000 0000	1	10 1010 1011	0	00 0000 0000	0	0	0 0000 0000	0	0	0 0000 0000

c. **Common Usage GICB Capability Report, Register 17_{16}:** (§2.2.25.2.2.6 and 2.2.25.2.2.7)

Within **FIVE** (5) seconds of the interrogation / reply sequence in Part 6.b., interrogate the transponder with the following GICB Extraction interrogation in order to extract the Register 17_{16} Common Usage GICB Capability Report:

REGISTER 17_{16} COMMON USAGE GICB CAPABILITY GICB EXTRACTION EXTENDED DATA SOURCE INTERROGATION SETUP									
1 ---- 5	6 ---- 8	9 --- 13	14-16	17 -- 20	21 -- 24	25	26	27—28	29 --- 32
				"SD"					
"UF" =	**"PC" =**	**"RR" =**	**"DI" =**	**"IIS" =**	**"RRS =**	**"X" =**	**"LOS" =**	**"XX" =**	**"TMS" =**
4	0	**17** (11 HEX)	**7**	0	**7**	0	0	0	0

Verify that the transponder replies with a "**DF**" = **20** reply with:

Bit **56** (bit **24** of the **"MB"** field) set to "**1**" to indicate that Register 60_{16} servicing capability has been re-started due to Indicated Airspeed data being provided.

d. **Mode S Specific Services GICB Capability, Register 18_{16}:** (§2.2.25.3)

Within **FIVE** (5) seconds of the interrogation / reply sequence in Part 6.b., interrogate the transponder with the following GICB Extraction interrogation in order to extract the Register 18_{16} Mode S Specific Services GICB Capability:

REGISTER 18_{16} MODE S SPECIFIC SERVICES CAPABILITY GICB EXTRACTION EXTENDED DATA SOURCE INTERROGATION SETUP									
1 ---- 5	6 ---- 8	9 --- 13	14-16	17 -- 20	21 -- 24	25	26	27—28	29 --- 32
				"SD"					
"UF" =	**"PC" =**	**"RR" =**	**"DI" =**	**"IIS" =**	**"RRS =**	**"X" =**	**"LOS" =**	**"XX" =**	**"TMS" =**
4	0	**17** (11 HEX)	**7**	0	**8**	0	0	0	0

Verify that the transponder replies with a "**DF**" = **20** reply with:

(1). Bit **64** (bit **32** of the **"MB"** field) set to "**1**" to indicate that Register 19_{16} servicing capability has been established during the power-on cycle.

(2). Bit **65** (bit **33** of the **"MB"** field) set to **"1"** to indicate that Register 18_{16} servicing capability has been established during the power-on cycle.

(3). Bit **66** (bit **34** of the **"MB"** field) set to **"1"** to indicate that Register 17_{16} servicing capability has been established during the power-on cycle.

e. **Mode S Specific Services GICB Capability, Register 19_{16}:** (§2.2.25.3)

Within **FIVE** (5) seconds of the interrogation / reply sequence in Part 6.b., interrogate the transponder with the following GICB Extraction interrogation in order to extract the Register 19_{16} Mode S Specific Services GICB Capability:

REGISTER 19_{16} MODE S SPECIFIC SERVICES CAPABILITY GICB EXTRACTION EXTENDED DATA SOURCE INTERROGATION SETUP									
1 ---- 5	6 ---- 8	9 --- 13	14-16	17 -- 20	21 -- 24	25	26	27—28	29 --- 32
				"SD"					
"UF" =	**"PC" =**	**"RR" =**	**"DI" =**	**"IIS" =**	**"RRS =**	**"X" =**	**"LOS" =**	**"XX" =**	**"TMS" =**
4	0	**17** (11 HEX)	**7**	0	**9**	0	0	0	0

Verify that the transponder replies with a "**DF**" = **20** reply with:

Bit **49** (bit **17** of the **"MB"** field) set to "**1**" to indicate that Register 60_{16} servicing capability has been established during the power-on cycle.

f. **Comm-B Broadcast Validation:** (§2.2.25.1.4)

Continue to interrogate the transponder with the following GICB Extraction interrogation in order to extract the Register 60_{16} - Heading and Speed Report data monitor the **"DR"** field in the reply.

REGISTER 60_{16} HEADING AND SPEED REPORT GICB EXTRACTION EXTENDED DATA SOURCE INTERROGATION SETUP									
1 ---- 5	6 ---- 8	9 --- 13	14-16	17 -- 20	21 -- 24	25	26	27—28	29 --- 32
				"SD"					
"UF" =	**"PC" =**	**"RR" =**	**"DI" =**	**"IIS" =**	**"RRS =**	**"X" =**	**"LOS" =**	**"XX" =**	**"TMS" =**
4	0	**22** (16 HEX)	**7**	0	**0**	0	0	0	0

Within **TEN** (10) seconds of providing the transponder with data as detailed in Part 6.a.,

Verify that the **"DR"** field in **DF=20** replies is set to **"DR" = 4, 5, 6**, or **7** to indicate that a Comm-B Broadcast is active.

g. **Comm-B Broadcast Extraction:** (§2.2.25.1.4)

After determining that the **"DR"** field has been set to **"DR"= 4, 5, 6,** or **7** in Part 6.f., interrogate the transponder with the following Comm-B Extraction interrogation in order to extract the Comm-B broadcast message which should be the Data Link Capability Report contained in Register 10_{16}.

COMM-B BROADCAST EXTRACTION INTERROGATION SETUP									
1 ---- 5	6 ---- 8	9 --- 13	14-16	17 -- 20	21 -- 24	25	26	27—28	29 --- 32
				"SD"					
"UF" =	**"PC" =**	**"RR" =**	**"DI" =**	**"IIS" =**	**"RRS =**	**"X" =**	**"LOS" =**	**"XX" =**	**"TMS" =**
4	0	**16** (10 HEX)	**7**	0	**0**	0	0	0	0

Verify that the transponder replies with a "**DF**" = **20** reply with:

(1). "DR" = 4 or 5 if TCAS Information **IS NOT** available

= 6 or 7 if TCAS Information **IS** available.

(2). Bit **33** –through- **40** (bit 1 –through- **8** of the "MB" field) set to 10 HEX (**0001 0000**).

(3). Bit **57** ["Mode S Specific Services Capability" (bit **25** of the "MB" field)] set to ONE (1) to indicate that the transponder has established Mode S Specific Services Capability.

(4). Bit **67** ["SIC" subfield (bit **35** of the "MB" field)] set to ONE (1) to indicate that the transponder does have "SI" capability.

(5). Bit **68** [Common Usage GICB Capability Report Bit (bit **36** of the **"MB"** field)] toggled to **"1"** (from **"0"**) to indicate that Register 17_{16} has changed servicing on Register 60_{16} has changed due to having Indicated Airspeed data.

h. **Comm-B Broadcast due to Data Link Capability Change Termination:** (§2.2.25.1.4)

Continue to interrogate the transponder with the interrogation described in Part 6. g. (e.g., the last step) until the transponder replies with a "DF" = 20 reply with "DR" NOT EQUAL to 4, 5, 6, or 7.

Verify that the elapsed time of the Test Timer started in Part 6.b.(2) is 18 +/- 1 second.

Note: *At this time, the "B" timer started in Part 6.b.(2). as broadcast due to a change in Data Link Capability should have terminated.*

2.7.7.7 PART 7: Register 60_{16} - Heading and Speed Report - Data Change Validation - Set 5 (§2.2.25.8 and 2.2.25.8.1)

Repeat **PART 3:**

2.7.7.8 PART 8: Register 60_{16} - Heading and Speed Report - Data Change Validation - Set 6 (§2.2.25.8 and 2.2.25.8.1)

Notes:

1. *The primary intent of Part **8** beyond data validation in Register 60_{16} is to validate Declaration of Capability while starting Register 60_{16} servicing with a single parameter, e.g., Mach.*
2. *Review all subparagraphs of Part **8** prior to performing tests. This is necessary to establish the appropriate timing between changing data inputs and interrogations.*

a. **Data / Source Change - Set 2:** (§2.2.25.8.2)

(1). Magnetic Heading Data Input: (§2.2.25.8.2.1)

Via an appropriate input interface, terminate provision of valid data to the transponder with Indicated Airspeed data.

(2). Indicated Airspeed Data Input - ADS: (§2.2.25.8.2.2)

Via an appropriate input interface, terminate provision of valid data to the transponder with Indicated Airspeed data.

(3). Mach Data Input - ADS: (§2.2.25.8.2.3)

Via an appropriate input interface, provide the transponder with the following Mach data at a minimum rate of 5 per second in order to provide appropriate Mach information.

Mach (milli-Mach) - ADS			
[See Note 1]		**[See Note 2]**	
Data Value (mill-Mach)	**Typical Binary Encoding**	**Rounded Input Data Value (knots)**	**Rounded Input Encoding**
+2730.625 (2.730625 Mach)	0__1010 1010 1010 1010	**2,732.00**	10 1010 1011

Notes:

1. ***Data Input Value*** *and* ***Typical Binary Encoding*** *represent the data as it is provided to the transponder in two's complement format. Sign Bit is always positive (e,g., = "0").*

2. ***Rounded Input Data Value*** *and* ***Rounded Input Encoding*** *represent the data as it is expected to be seen in the* ***"MB"*** *field of Register* 60_{16}.
Data must be rounded to a resolution of 4 milli-mach; therefore,

```
    1010 1010 1 0 10 1010
+   0000 0000 0 0 10 0000
    1010 1010 1 1 10 1010
```

Register 60_{16} ***"MB"*** *encoding = 10 1010 1011 (bits* ***25*** *through* ***34****) (2AB Hex)*

(4). Barometric Altitude Rate Data Input - ADS: (§2.2.25.8.2.4)

Via an appropriate input interface, terminate provision of valid data to the transponder with Barometric Altitude Rate data.

(5). Inertial Vertical Rate Data Input - FMS / IRS: (§2.2.25.8.2.5)

Via an appropriate input interface, terminate provision of valid data to the transponder with Inertial Vertical Rate data.

b. **Register 60_{16} Capability Verification:** (§2.2.25.8 –through- 2.2.25.8.3)

Within **1.3** seconds of providing the transponder with data as detailed in Part 8.a., interrogate the transponder with the following GICB Extraction interrogation in order to extract the Register 60_{16} - Heading and Speed Report data.

REGISTER 60_{16} HEADING AND SPEED REPORT GICB EXTRACTION EXTENDED DATA SOURCE INTERROGATION SETUP									
1 ---- 5	6 ---- 8	9 --- 13	14-16	17 -- 20	21 -- 24	25	26	27—28	29 --- 32
				"SD"					
"UF" =	**"PC" =**	**"RR" =**	**"DI" =**	**"IIS" =**	**"RRS =**	**"X" =**	**"LOS" =**	**"XX" =**	**"TMS" =**
4	0	**22** (16 HEX)	**7**	0	**0**	0	0	0	0

Notes:

1. *The interrogation should initiate the **"B"** timer for **18 ±1.0** seconds since a Comm-B Broadcast is initiated.*

2. *In this case, the Comm-B Broadcast is caused by the contents of Register 60_{16} changing as Mach data has been re-started. This change causes a change to Register 17_{16}, which then forces a change to Register 10_{16}, which then results in the initiation of the Comm-B Broadcast.*

(1). Verify that the transponder replies with a **"DF" = 20** reply.

(2). During replies to this interrogation sequence and subsequent interrogations during this test procedure, monitor the **"DR"** field. If the **"DR"** field changes to **4, 5, 6,** or **7**, then the transponder has initiated a Comm-B Broadcast.

When the **"DR"** field changes, start a Test Timer to monitor that the **"B"-**Timer runs for **18 ±1.0** seconds.

"DR" = 4 or 5 if TCAS Information IS NOT available

= 6 or 7 if TCAS Information IS available.

(3). Verify that the **"DF"=20** reply **"MB"** field provides Data with:

Part 8.b.(3) DF = 20, Heading and Speed "MB" Field													
Reply Bits:	33	34	35 ---------- 44	45	46 ---- 55	56	57 -------- 66	67	68	69 ------- 77	78	79	80 ---------- 88
"MB" Bits:	1	2	3 ---------- 12	13	14 ----- 23	24	25 -------- 34	35	36	37 ------- 45	46	47	48 --------- 56
Field:	**Magnetic Heading**			**Indicated Airspeed**		**Mach**		**Barometric Altitude Rate**			**Inertial Vertical Rate**		
	Status	Sign	Data	Status	Data	Status	Data	Status	Sign	Data	Status	Sign	Data
Data:	0	0	00 0000 0000	0	00 0000 0000	1	10 1010 1011	0	0	0 0000 0000	0	0	0 0000 0000

c. **Common Usage GICB Capability Report, Register 17_{16}:** (§2.2.25.2.2.6 and 2.2.25.2.2.7)

Within **FIVE** (5) seconds of the interrogation / reply sequence in Part 8.b., interrogate the transponder with the following GICB Extraction interrogation in order to extract the Register 17_{16} Common Usage GICB Capability Report:

REGISTER 17_{16} COMMON USAGE GICB CAPABILITY GICB EXTRACTION EXTENDED DATA SOURCE INTERROGATION SETUP									
1 ---- 5	6 ---- 8	9 --- 13	14-16	17 -- 20	21 -- 24	25	26	27—28	29 --- 32
				"SD"					
"UF" =	**"PC" =**	**"RR" =**	**"DI" =**	**"IIS" =**	**"RRS =**	**"X" =**	**"LOS" =**	**"XX" =**	**"TMS" =**
4	0	**17** (11 HEX)	**7**	0	**7**	0	0	0	0

Verify that the transponder replies with a "**DF**" = **20** reply with:

Bit **56** (bit **24** of the **"MB"** field) set to "**1**" to indicate that Register 60_{16} servicing capability has been re-started due to Mach data being provided.

d. **Mode S Specific Services GICB Capability, Register 18_{16}:** (§2.2.25.3)

Within **FIVE** (5) seconds of the interrogation / reply sequence in Part 8.b., interrogate the transponder with the following GICB Extraction interrogation in order to extract the Register 18_{16} Mode S Specific Services GICB Capability:

REGISTER 18_{16} MODE S SPECIFIC SERVICES CAPABILITY GICB EXTRACTION EXTENDED DATA SOURCE INTERROGATION SETUP									
1 ---- 5	6 ---- 8	9 --- 13	14-16	17 -- 20	21 -- 24	25	26	27—28	29 --- 32
				"SD"					
"UF" =	**"PC" =**	**"RR" =**	**"DI" =**	**"IIS" =**	**"RRS =**	**"X" =**	**"LOS" =**	**"XX" =**	**"TMS" =**
4	0	**17** (11 HEX)	**7**	0	**8**	0	0	0	0

Verify that the transponder replies with a "**DF**" = **20** reply with:

(1). Bit **64** (bit **32** of the **"MB"** field) set to "**1**" to indicate that Register 19_{16} servicing capability has been established during the power-on cycle.

(2). Bit **65** (bit **33** of the **"MB"** field) set to **"1"** to indicate that Register 18_{16} servicing capability has been established during the power-on cycle.

(3). Bit **66** (bit **34** of the **"MB"** field) set to **"1"** to indicate that Register 17_{16} servicing capability has been established during the power-on cycle.

e. **Mode S Specific Services GICB Capability, Register 19_{16}:** (§2.2.25.3)

Within **FIVE** (5) seconds of the interrogation / reply sequence in Part 8.b., interrogate the transponder with the following GICB Extraction interrogation in order to extract the Register 19_{16} Mode S Specific Services GICB Capability:

REGISTER 19_{16} MODE S SPECIFIC SERVICES CAPABILITY GICB EXTRACTION EXTENDED DATA SOURCE INTERROGATION SETUP									
1 ---- 5	6 ---- 8	9 --- 13	14-16	17 -- 20	21 -- 24	25	26	27—28	29 --- 32
				"SD"					
"UF" =	**"PC" =**	**"RR" =**	**"DI" =**	**"IIS" =**	**"RRS =**	**"X" =**	**"LOS" =**	**"XX" =**	**"TMS" =**
4	0	**17** (11 HEX)	**7**	0	**9**	0	0	0	0

Verify that the transponder replies with a "**DF**" = **20** reply with:

Bit **49** (bit **17** of the **"MB"** field) set to "**1**" to indicate that Register 60_{16} servicing capability has been established during the power-on cycle.

f. **Comm-B Broadcast Validation:** (§2.2.25.1.4)

Continue to interrogate the transponder with the following GICB Extraction interrogation in order to extract the Register 60_{16} - Heading and Speed Report data monitor the **"DR"** field in the reply.

REGISTER 60_{16} HEADING AND SPEED REPORT GICB EXTRACTION EXTENDED DATA SOURCE INTERROGATION SETUP									
1 ---- 5	6 ---- 8	9 --- 13	14-16	17 -- 20	21 -- 24	25	26	27—28	29 --- 32
				"SD"					
"UF" =	**"PC" =**	**"RR" =**	**"DI" =**	**"IIS" =**	**"RRS =**	**"X" =**	**"LOS" =**	**"XX" =**	**"TMS" =**
4	0	**22** (16 HEX)	**7**	0	**0**	0	0	0	0

Within **TEN** (10) seconds of providing the transponder with data as detailed in Part 8.a.,

Verify that the **"DR"** field in **DF=20** replies is set to **"DR" = 4, 5, 6**, or **7** to indicate that a Comm-B Broadcast is active.

g. **Comm-B Broadcast Extraction:** (§2.2.25.1.4)

After determining that the **"DR"** field has been set to **"DR"= 4, 5, 6,** or **7** in Part 8.f., interrogate the transponder with the following Comm-B Extraction interrogation in order to extract the Comm-B broadcast message which should be the Data Link Capability Report contained in Register 10_{16}.

COMM-B BROADCAST EXTRACTION INTERROGATION SETUP									
1 ---- 5	6 ---- 8	9 --- 13	14-16	17 -- 20	21 -- 24	25	26	27—28	29 --- 32
				"SD"					
"UF" =	**"PC" =**	**"RR" =**	**"DI" =**	**"IIS" =**	**"RRS =**	**"X" =**	**"LOS" =**	**"XX" =**	**"TMS" =**
4	0	**16** (10 HEX)	**7**	0	**0**	0	0	0	0

Verify that the transponder replies with a "**DF**" = **20** reply with:

(1). "DR" = 4 or 5 if TCAS Information **IS NOT** available

= 6 or 7 if TCAS Information **IS** available.

(2). Bit **33** –through- **40** (bit 1 –through- **8** of the "MB" field) set to 10 HEX (**0001 0000**).

(3). Bit **57** ["Mode S Specific Services Capability" (bit **25** of the "MB" field)] set to ONE (1) to indicate that the transponder has established Mode S Specific Services Capability.

(4). Bit **67** ["SIC" subfield (bit **35** of the "MB" field)] set to ONE (1) to indicate that the transponder does have "SI" capability.

(5). Bit **68** [Common Usage GICB Capability Report Bit (bit **36** of the **"MB"** field)] toggled to **"1"** (from **"0"**) to indicate that Register 17_{16} has changed servicing on Register 60_{16} has changed due to having Mach data.

h. **Comm-B Broadcast due to Data Link Capability Change Termination:** (§2.2.25.1.4)

Continue to interrogate the transponder with the interrogation described in Part 8. g. (e.g., the last step) until the transponder replies with a "DF" = 20 reply with "DR" NOT EQUAL to 4, 5, 6, or 7.

Verify that the elapsed time of the Test Timer started in Part 8.b.(2) is 18 +/- 1 second.

Note: *At this time, the "B" timer started in Part 8.b.(2). as broadcast due to a change in Data Link Capability should have terminated.*

2.7.7.9 PART 9: Register 60_{16} - Heading and Speed Report - Data Change Validation - Set 7 (§2.2.25.8 and 2.2.25.8.1)

Repeat **PART 3:**

2.7.7.10 PART 10: Register 60_{16} - Heading and Speed Report - Data Change Validation - Set 8 (§2.2.25.8 and 2.2.25.8.1)

Notes:

1. *The primary intent of Part **10** beyond data validation in Register 60_{16} is to validate Declaration of Capability while starting Register 60_{16} servicing with a single parameter, e.g., Barometric Altitude Rate.*
2. *Review all subparagraphs of Part **10** prior to performing tests. This is necessary to establish the appropriate timing between changing data inputs and interrogations.*

a. **Data / Source Change - Set 2:** (§2.2.25.8.2)

(1). Magnetic Heading Data Input: (§2.2.25.8.2.1)

Via an appropriate input interface, terminate provision of valid data to the transponder with Indicated Airspeed data.

(2). Indicated Airspeed Data Input - ADS: (§2.2.25.8.2.2)

Via an appropriate input interface, terminate provision of valid data to the transponder with Indicated Airspeed data.

(3). Mach Data Input - ADS: (§2.2.25.8.2.3)

Via an appropriate input interface, terminate provision of valid data to the transponder with Mach data.

(4). Barometric Altitude Rate Data Input - ADS: (§2.2.25.8.2.4)

Via an appropriate input interface, provide the transponder with the following Barometric Altitude Rate data at a minimum rate of 5 per second in order to provide appropriate Barometric Altitude Rate information.

Barometric Altitude Rate (feet/minute) - ADS			
[See Note 1]		**[See Note 2,3]**	
Barometric Altitude Rate (feet/minute)	**Typical Binary Encoding**	**Rounded Input Data Value (feet/minute)**	**Rounded Input Encoding**
-13,648.00	1_100 1010 1010	**-13,664.00**	1_0 0101 0101

Notes:

1. ***Data Input Value*** *and* ***Typical Binary Encoding*** *represent the data as it is provided to the transponder in two's complement format. Sign Bit is* ***"0"*** *for* ***"UP"*** *and* ***"1"*** *for* ***"Down"****.*

2. ***Rounded Input Data Value*** *and* ***Rounded Input Encoding*** *represent the data as it is expected to be seen in the* ***"MB"*** *field of Register* 60_{16}*.*
Data must be rounded to a resolution of 32 feet/minute; therefore,
0_011 0101 01 0 1 (+13,648)
+0_000 0000 00 0 1 (round LSB)
0_011 0101 01 1
1_100 1010 10 0 (complement)
+0_000 0000 00 1
1_100 1010 10 1 (2's complement)
Register 60_{16} ***"MB"*** *encoding = 1__0 0101 0101 (bits* ***36*** *through* ***45****) (1AB Hex)*

3. *Data is shown encoded with the "Sign Bit", e.g., bit* ***36*** *being to the left of the "Underscore".*

(5). Inertial Vertical Rate Data Input - FMS / IRS: (§2.2.25.8.2.5)

Via an appropriate input interface, terminate provision of valid data to the transponder with Inertial Vertical Rate data.

b. **Register 60_{16} Capability Verification:** (§2.2.25.8 –through- 2.2.25.8.3)

Within **1.3** seconds of providing the transponder with data as detailed in Part 10.a., interrogate the transponder with the following GICB Extraction interrogation in order to extract the Register 60_{16} - Heading and Speed Report data.

REGISTER 60_{16} HEADING AND SPEED REPORT GICB EXTRACTION EXTENDED DATA SOURCE INTERROGATION SETUP									
1 ---- 5	6 ---- 8	9 --- 13	14-16	17 -- 20	21 -- 24	25	26	27—28	29 --- 32
				"SD"					
"UF" =	**"PC" =**	**"RR" =**	**"DI" =**	**"IIS" =**	**"RRS =**	**"X" =**	**"LOS" =**	**"XX" =**	**"TMS" =**
4	0	**22** (16 HEX)	**7**	0	**0**	0	0	0	0

Notes:

1. *The interrogation should initiate the **"B"** timer for **18 ±1.0** seconds since a Comm-B Broadcast is initiated.*

2. *In this case, the Comm-B Broadcast is caused by the contents of Register 60_{16} changing as Barometric Altitude Rate data has been re-started. This change causes a change to Register 17_{16}, which then forces a change to Register 10_{16}, which then results in the initiation of the Comm-B Broadcast.*

(1). Verify that the transponder replies with a **"DF" = 20** reply.

(2). During replies to this interrogation sequence and subsequent interrogations during this test procedure, monitor the **"DR"** field. If the **"DR"** field changes to **4, 5, 6,** or **7**, then the transponder has initiated a Comm-B Broadcast.

When the **"DR"** field changes, start a Test Timer to monitor that the **"B"-**Timer runs for **18 ±1.0** seconds.

"DR" = 4 or 5 if TCAS Information IS NOT available

= 6 or 7 if TCAS Information IS available.

(3). Verify that the **"DF"=20** reply **"MB"** field provides Data with:

Part 8.b.(3) DF = 20, Heading and Speed "MB" Field													
Reply Bits:	33	34	35 ---------- 44	45	46 ---- 55	56	57 -------- 66	67	68	69 ------- 77	78	79	80 ---------- 88
"MB" Bits:	1	2	3 ---------- 12	13	14 ----- 23	24	25 -------- 34	35	36	37 ------- 45	46	47	48 --------- 56
Field:	**Magnetic Heading**			**Indicated Airspeed**		**Mach**		**Barometric Altitude Rate**			**Inertial Vertical Rate**		
	Status	Sign	Data	Status	Data	Status	Data	Status	Sign	Data	Status	Sign	Data
Data:	0	0	00 0000 0000	0	00 0000 0000	0	00 0000 0000	1	1	0 0101 0101	0	0	0 0000 0000

c. **Common Usage GICB Capability Report, Register 17_{16}:** (§2.2.25.2.2.6 and 2.2.25.2.2.7)

Within **FIVE** (5) seconds of the interrogation / reply sequence in Part 10.b., interrogate the transponder with the following GICB Extraction interrogation in order to extract the Register 17_{16} Common Usage GICB Capability Report:

REGISTER 17_{16} COMMON USAGE GICB CAPABILITY GICB EXTRACTION EXTENDED DATA SOURCE INTERROGATION SETUP									
1 ---- 5	6 ---- 8	9 --- 13	14-16	17 -- 20	21 -- 24	25	26	27—28	29 --- 32
				"SD"					
"UF" =	**"PC" =**	**"RR" =**	**"DI" =**	**"IIS" =**	**"RRS =**	**"X" =**	**"LOS" =**	**"XX" =**	**"TMS" =**
4	0	**17** (11 HEX)	**7**	0	**7**	0	0	0	0

Verify that the transponder replies with a "**DF**" = **20** reply with:

Bit **56** (bit **24** of the **"MB"** field) set to "**1**" to indicate that Register 60_{16} servicing capability has been re-started due to Barometric Altitude Rate data being provided.

d. **Mode S Specific Services GICB Capability, Register 18_{16}:** (§2.2.25.3)

Within **FIVE** (5) seconds of the interrogation / reply sequence in Part 10.b., interrogate the transponder with the following GICB Extraction interrogation in order to extract the Register 18_{16} Mode S Specific Services GICB Capability:

REGISTER 18_{16} MODE S SPECIFIC SERVICES CAPABILITY GICB EXTRACTION EXTENDED DATA SOURCE INTERROGATION SETUP									
1 ---- 5	6 ---- 8	9 --- 13	14-16	17 -- 20	21 -- 24	25	26	27—28	29 --- 32
				"SD"					
"UF" =	**"PC" =**	**"RR" =**	**"DI" =**	**"IIS" =**	**"RRS =**	**"X" =**	**"LOS" =**	**"XX" =**	**"TMS" =**
4	0	**17** (11 HEX)	**7**	0	**8**	0	0	0	0

Verify that the transponder replies with a "**DF**" = **20** reply with:

(1). Bit **64** (bit **32** of the **"MB"** field) set to "**1**" to indicate that Register 19_{16} servicing capability has been established during the power-on cycle.

(2). Bit **65** (bit **33** of the **"MB"** field) set to **"1"** to indicate that Register 18_{16} servicing capability has been established during the power-on cycle.

(3). Bit **66** (bit **34** of the **"MB"** field) set to **"1"** to indicate that Register 17_{16} servicing capability has been established during the power-on cycle.

e. **Mode S Specific Services GICB Capability, Register 19_{16}:** (§2.2.25.3)

Within **FIVE** (5) seconds of the interrogation / reply sequence in Part 10.b., interrogate the transponder with the following GICB Extraction interrogation in order to extract the Register 19_{16} Mode S Specific Services GICB Capability:

REGISTER 19_{16} MODE S SPECIFIC SERVICES CAPABILITY GICB EXTRACTION EXTENDED DATA SOURCE INTERROGATION SETUP									
1 ---- 5	6 ---- 8	9 --- 13	14-16	17 -- 20	21 -- 24	25	26	27—28	29 --- 32
				"SD"					
"UF" =	**"PC" =**	**"RR" =**	**"DI" =**	**"IIS" =**	**"RRS =**	**"X" =**	**"LOS" =**	**"XX" =**	**"TMS" =**
4	0	**17** (11 HEX)	**7**	0	**9**	0	0	0	0

Verify that the transponder replies with a "**DF**" = **20** reply with:

Bit **49** (bit **17** of the **"MB"** field) set to "**1**" to indicate that Register 60_{16} servicing capability has been established during the power-on cycle.

f. **Comm-B Broadcast Validation:** (§2.2.25.1.4)

Continue to interrogate the transponder with the following GICB Extraction interrogation in order to extract the Register 60_{16} - Heading and Speed Report data monitor the **"DR"** field in the reply.

REGISTER 60_{16} HEADING AND SPEED REPORT GICB EXTRACTION EXTENDED DATA SOURCE INTERROGATION SETUP									
1 ---- 5	6 ---- 8	9 --- 13	14-16	17 -- 20	21 -- 24	25	26	27—28	29 --- 32
				"SD"					
"UF" =	**"PC" =**	**"RR" =**	**"DI" =**	**"IIS" =**	**"RRS =**	**"X" =**	**"LOS" =**	**"XX" =**	**"TMS" =**
4	0	**22** (16 HEX)	**7**	0	**0**	0	0	0	0

Within **TEN** (10) seconds of providing the transponder with data as detailed in Part 10.a.,

Verify that the **"DR"** field in **DF=20** replies is set to **"DR" = 4, 5, 6**, or **7** to indicate that a Comm-B Broadcast is active.

g. **Comm-B Broadcast Extraction:** (§2.2.25.1.4)

After determining that the **"DR"** field has been set to **"DR"= 4, 5, 6,** or **7** in Part 10.f., interrogate the transponder with the following Comm-B Extraction interrogation in order to extract the Comm-B broadcast message which should be the Data Link Capability Report contained in Register 10_{16}.

COMM-B BROADCAST EXTRACTION INTERROGATION SETUP									
1 ---- 5	6 ---- 8	9 --- 13	14-16	17 -- 20	21 -- 24	25	26	27—28	29 --- 32
				"SD"					
"UF" =	**"PC" =**	**"RR" =**	**"DI" =**	**"IIS" =**	**"RRS =**	**"X" =**	**"LOS" =**	**"XX" =**	**"TMS" =**
4	0	**16** (10 HEX)	**7**	0	**0**	0	0	0	0

Verify that the transponder replies with a "**DF**" = **20** reply with:

(1). "DR" = 4 or 5 if TCAS Information **IS NOT** available

= 6 or 7 if TCAS Information **IS** available.

(2). Bit **33** –through- **40** (bit 1 –through- **8** of the "MB" field) set to 10 HEX (**0001 0000**).

(3). Bit **57** ["Mode S Specific Services Capability" (bit **25** of the "MB" field)] set to ONE (1) to indicate that the transponder has established Mode S Specific Services Capability.

(4). Bit **67** ["SIC" subfield (bit **35** of the "MB" field)] set to ONE (1) to indicate that the transponder does have "SI" capability.

(5). Bit **68** [Common Usage GICB Capability Report Bit (bit **36** of the **"MB"** field)] toggled to **"1"** (from **"0"**) to indicate that Register 17_{16} has changed servicing on Register 60_{16} has changed due to having Barometric Altitude Rate data.

h. **Comm-B Broadcast due to Data Link Capability Change Termination:** (§2.2.25.1.4)

Continue to interrogate the transponder with the interrogation described in Part 10. g. (e.g., the last step) until the transponder replies with a "DF" = 20 reply with "DR" NOT EQUAL to 4, 5, 6, or 7.

Verify that the elapsed time of the Test Timer started in Part 10.b.(2) is 18 +/- 1 second.

Note: *At this time, the "B" timer started in Part 10.b.(2). as broadcast due to a change in Data Link Capability should have terminated.*

2.7.7.11 PART 11: Register 60_{16} - Heading and Speed Report - Data Change Validation - Set 9 (§2.2.25.8 and 2.2.25.8.1)

Repeat **PART 3:**

2.7.7.12 PART 12: Register 60_{16} - Heading and Speed Report - Data Change Validation - Set 10 (§2.2.25.8 and 2.2.25.8.1)

Notes:

1. *The primary intent of Part **12** beyond data validation in Register 60_{16} is to validate Declaration of Capability while starting Register 60_{16} servicing with a single parameter, e.g., Inertial Vertical Rate.*
2. *Review all subparagraphs of Part **12** prior to performing tests. This is necessary to establish the appropriate timing between changing data inputs and interrogations.*

a. **Data / Source Change - Set 2:** (§2.2.25.8.2)

(1). Magnetic Heading Data Input: (§2.2.25.8.2.1)

Via an appropriate input interface, terminate provision of valid data to the transponder with Indicated Airspeed data.

(2). Indicated Airspeed Data Input - ADS: (§2.2.25.8.2.2)

Via an appropriate input interface, terminate provision of valid data to the transponder with Indicated Airspeed data.

(3). Mach Data Input - ADS: (§2.2.25.8.2.3)

Via an appropriate input interface, terminate provision of valid data to the transponder with Mach data.

(4). Barometric Altitude Rate Data Input - ADS: (§2.2.25.8.2.4)

Via an appropriate input interface, terminate provision of valid data to the transponder with Barometric Altitude Rate data.

(5). Inertial Vertical Rate Data Input - FMS / IRS: (§2.2.25.8.2.5)

Via an appropriate input interface, provide the transponder with the following Inertial Vertical Rate data at a minimum rate of 5 per second in order to provide appropriate Inertial Vertical Rate information.

Inertial Vertical Rate (feet/minute) - FMS / IRS			
[See Note 1]		**[See Note 2,3]**	
Inertial Vertical Rate (feet/minute)	**Typical Binary Encoding**	**Rounded Input Data Value (feet/minute)**	**Rounded Input Encoding**
- 9,557	1_101 1010 1010 1011	**9,568**	1_0 1101 0101

Notes:

1. ***Data Input Value*** *and* ***Typical Binary Encoding*** *represent the data as it is provided to the transponder in two's complement format. Sign Bit is* ***"0"*** *for* ***"UP"*** *and* ***"1"*** *for* ***"Down"****.*

2. ***Rounded Input Data Value*** *and* ***Rounded Input Encoding*** *represent the data as it is expected to be seen in the* ***"MB"*** *field of Register* 60_{16}*.*
Data must be rounded to a resolution of 32 feet/minute; therefore,

```
    0_010 0101 01 0 1 0101   (+9,557)
+   0_000 0000 00 0 1 0000   (round LSB)
    0_010 0101 01 1 0 0110
    1_101 1010 10 0          (complement)
  + 0_000 0000 00 1
    1_101 1010 10 1          (2's complement)
```

Register 60_{16} ***"MB"*** *encoding = 1_0 1101 0101 (bits* ***47*** *through* ***56***

3. *Data is shown encoded with the "Sign Bit", e.g., bit* ***47*** *being to the left of the "Underscore".*

b. **Register 60_{16} Capability Verification:** (§2.2.25.8 –through- 2.2.25.8.3)

Within **1.3** seconds of providing the transponder with data as detailed in Part 10.a., interrogate the transponder with the following GICB Extraction interrogation in order to extract the Register 60_{16} - Heading and Speed Report data.

REGISTER 60_{16} HEADING AND SPEED REPORT GICB EXTRACTION EXTENDED DATA SOURCE INTERROGATION SETUP									
1 ---- 5	6 ---- 8	9 --- 13	14-16	17 -- 20	21 -- 24	25	26	27—28	29 --- 32
				"SD"					
"UF" =	**"PC" =**	**"RR" =**	**"DI" =**	**"IIS" =**	**"RRS =**	**"X" =**	**"LOS" =**	**"XX" =**	**"TMS" =**
4	0	**22** (16 HEX)	**7**	0	**0**	0	0	0	0

Notes:

1. *The interrogation should initiate the **"B"** timer for **18 ±1.0** seconds since a Comm-B Broadcast is initiated.*

2. *In this case, the Comm-B Broadcast is caused by the contents of Register 60_{16} changing as Inertial Vertical Rate data has been re-started. This change causes a change to Register 17_{16}, which then forces a change to Register 10_{16}, which then results in the initiation of the Comm-B Broadcast.*

(1). Verify that the transponder replies with a **"DF" = 20** reply.

(2). During replies to this interrogation sequence and subsequent interrogations during this test procedure, monitor the **"DR"** field. If the **"DR"** field changes to **4, 5, 6,** or **7**, then the transponder has initiated a Comm-B Broadcast.

When the **"DR"** field changes, start a Test Timer to monitor that the **"B"-**Timer runs for **18 ±1.0** seconds.

"DR" = 4 or 5 if TCAS Information IS NOT available

= 6 or 7 if TCAS Information IS available.

(3). Verify that the **"DF"=20** reply **"MB"** field provides Data with:

Part 8.b.(3) DF = 20, Heading and Speed "MB" Field													
Reply Bits:	33	34	35 ---------- 44	45	46 ---- 55	56	57 -------- 66	67	68	69 ------- 77	78	79	80 ---------- 88
"MB" Bits:	1	2	3 ---------- 12	13	14 ----- 23	24	25 -------- 34	35	36	37 ------- 45	46	47	48 --------- 56
Field:	**Magnetic Heading**			**Indicated Airspeed**		**Mach**		**Barometric Altitude Rate**			**Inertial Vertical Rate**		
	Status	Sign	Data	Status	Data	Status	Data	Status	Sign	Data	Status	Sign	Data
Data:	0	0	00 0000 0000	0	00 0000 0000	0	00 0000 0000	0	0	0 0000 0000	1	1	0 1101 0101

c. **Common Usage GICB Capability Report, Register 17_{16}:** (§2.2.25.2.2.6 and 2.2.25.2.2.7)

Within **FIVE** (5) seconds of the interrogation / reply sequence in Part 12.b., interrogate the transponder with the following GICB Extraction interrogation in order to extract the Register 17_{16} Common Usage GICB Capability Report:

REGISTER 17_{16} COMMON USAGE GICB CAPABILITY GICB EXTRACTION EXTENDED DATA SOURCE INTERROGATION SETUP									
1 ---- 5	6 ---- 8	9 --- 13	14-16	17 -- 20	21 -- 24	25	26	27—28	29 --- 32
				"SD"					
"UF" =	**"PC" =**	**"RR" =**	**"DI" =**	**"IIS" =**	**"RRS =**	**"X" =**	**"LOS" =**	**"XX" =**	**"TMS" =**
4	0	**17** (11 HEX)	**7**	0	**7**	0	0	0	0

Verify that the transponder replies with a "**DF**" = **20** reply with:

Bit **56** (bit **24** of the **"MB"** field) set to "**1**" to indicate that Register 60_{16} servicing capability has been re-started due to Inertial Vertical Rate data being provided.

d. **Mode S Specific Services GICB Capability, Register 18_{16}:** (§2.2.25.3)

Within **FIVE** (5) seconds of the interrogation / reply sequence in Part 12.b., interrogate the transponder with the following GICB Extraction interrogation in order to extract the Register 18_{16} Mode S Specific Services GICB Capability:

REGISTER 18_{16} MODE S SPECIFIC SERVICES CAPABILITY GICB EXTRACTION EXTENDED DATA SOURCE INTERROGATION SETUP									
1 ---- 5	6 ---- 8	9 --- 13	14-16	17 -- 20	21 -- 24	25	26	27—28	29 --- 32
				"SD"					
"UF" =	**"PC" =**	**"RR" =**	**"DI" =**	**"IIS" =**	**"RRS =**	**"X" =**	**"LOS" =**	**"XX" =**	**"TMS" =**
4	0	**17** (11 HEX)	**7**	0	**8**	0	0	0	0

Verify that the transponder replies with a "**DF**" = **20** reply with:

(1). Bit **64** (bit **32** of the **"MB"** field) set to "**1**" to indicate that Register 19_{16} servicing capability has been established during the power-on cycle.

(2). Bit **65** (bit **33** of the **"MB"** field) set to **"1"** to indicate that Register 18_{16} servicing capability has been established during the power-on cycle.

(3). Bit **66** (bit **34** of the **"MB"** field) set to **"1"** to indicate that Register 17_{16} servicing capability has been established during the power-on cycle.

e. **Mode S Specific Services GICB Capability, Register 19_{16}:** (§2.2.25.3)

Within **FIVE** (5) seconds of the interrogation / reply sequence in Part 12.b., interrogate the transponder with the following GICB Extraction interrogation in order to extract the Register 19_{16} Mode S Specific Services GICB Capability:

REGISTER 19_{16} MODE S SPECIFIC SERVICES CAPABILITY GICB EXTRACTION EXTENDED DATA SOURCE INTERROGATION SETUP									
1 ---- 5	6 ---- 8	9 --- 13	14-16	17 -- 20	21 -- 24	25	26	27—28	29 --- 32
				"SD"					
"UF" =	**"PC" =**	**"RR" =**	**"DI" =**	**"IIS" =**	**"RRS =**	**"X" =**	**"LOS" =**	**"XX" =**	**"TMS" =**
4	0	**17** (11 HEX)	**7**	0	**9**	0	0	0	0

Verify that the transponder replies with a "**DF**" = **20** reply with:

Bit **49** (bit **17** of the **"MB"** field) set to "**1**" to indicate that Register 60_{16} servicing capability has been established during the power-on cycle.

f. **Comm-B Broadcast Validation:** (§2.2.25.1.4)

Continue to interrogate the transponder with the following GICB Extraction interrogation in order to extract the Register 60_{16} - Heading and Speed Report data monitor the **"DR"** field in the reply.

REGISTER 60_{16} HEADING AND SPEED REPORT GICB EXTRACTION EXTENDED DATA SOURCE INTERROGATION SETUP									
1 ---- 5	6 ---- 8	9 --- 13	14-16	17 -- 20	21 -- 24	25	26	27—28	29 --- 32
				"SD"					
"UF" =	**"PC" =**	**"RR" =**	**"DI" =**	**"IIS" =**	**"RRS =**	**"X" =**	**"LOS" =**	**"XX" =**	**"TMS" =**
4	0	**22** (16 HEX)	**7**	0	**0**	0	0	0	0

Within **TEN** (10) seconds of providing the transponder with data as detailed in Part 12.a.,

Verify that the **"DR"** field in **DF=20** replies is set to **"DR" = 4, 5, 6**, or **7** to indicate that a Comm-B Broadcast is active.

g. **Comm-B Broadcast Extraction:** (§2.2.25.1.4)

After determining that the **"DR"** field has been set to **"DR"= 4, 5, 6,** or **7** in Part 12.f., interrogate the transponder with the following Comm-B Extraction interrogation in order to extract the Comm-B broadcast message which should be the Data Link Capability Report contained in Register 10_{16}.

COMM-B BROADCAST EXTRACTION INTERROGATION SETUP									
1 ---- 5	6 ---- 8	9 --- 13	14-16	17 -- 20	21 -- 24	25	26	27—28	29 --- 32
				"SD"					
"UF" =	**"PC" =**	**"RR" =**	**"DI" =**	**"IIS" =**	**"RRS =**	**"X" =**	**"LOS" =**	**"XX" =**	**"TMS" =**
4	0	**16** (10 HEX)	**7**	0	**0**	0	0	0	0

Verify that the transponder replies with a "**DF**" = **20** reply with:

(1). "DR" = 4 or 5 if TCAS Information **IS NOT** available

= 6 or 7 if TCAS Information **IS** available.

(2). Bit **33** –through- **40** (bit 1 –through- **8** of the "MB" field) set to 10 HEX (**0001 0000**).

(3). Bit **57** ["Mode S Specific Services Capability" (bit **25** of the "MB" field)] set to ONE (1) to indicate that the transponder has established Mode S Specific Services Capability.

(4). Bit **67** ["SIC" subfield (bit **35** of the "MB" field)] set to ONE (1) to indicate that the transponder does have "SI" capability.

(5). Bit **68** [Common Usage GICB Capability Report Bit (bit **36** of the **"MB"** field)] toggled to **"1"** (from **"0"**) to indicate that Register 17_{16} has changed servicing on

Register 60_{16} has changed due to having Inertial Vertical Rate data.

h. **Comm-B Broadcast due to Data Link Capability Change Termination:** (§2.2.25.1.4)

Continue to interrogate the transponder with the interrogation described in Part 12. g. (e.g., the last step) until the transponder replies with a "DF" = 20 reply with "DR" NOT EQUAL to 4, 5, 6, or 7.

Verify that the elapsed time of the Test Timer started in Part 12.b.(2) is 18 +/- 1 second.

Note: *At this time, the "B" timer started in Part 12.b.(2). as broadcast due to a change in Data Link Capability should have terminated.*

2.7.7.13 PART 13: Register 60_{16} - Heading and Speed Report - Data Change Validation - Set 11 (§2.2.25.8 and 2.2.25.8.1)

a. **Data Input Initialization:** (§2.2.25.8.2)

(1). Magnetic Heading Data Input: (§2.2.25.8.2.1)

For each line Item # in the following table (Table 13.a(1)), provide the transponder with Magnetic Heading data having a value as indicated in the "Data Value" (degrees) Column in the table.

Table 13.a(1): Register 60_{16} - Magnetic Heading (degrees)								
Item #	**Type of Value**	**Generic Magnetic Heading Input (degrees) [Binary (BNR)]**			**Register 60_{16} Magnetic Heading (degrees)**			
		Status	**Sense (See Note 2)**	**Data Value (degrees)**	**Status (bit 1)**	**Sense (See Note 2)**	**Decimal Value (degrees)**	**Binary Value (bits 2 ---- 12) (See Note 3)**
1	Basic	Valid	West (CCW)	- 120.05859375 (239.9414063)	1	Left	- 120.0585937 (239.9414063)	1_01 0101 0101
2	Basic	Valid	East (CW)	119.8828125	1	Right	119.8828125	0_10 1010 1010
3	Basic	Valid	West (CCW)	- 24.08203125 (335.9196875)	1	Left	- 24.08203125 (335.9179688)	1_11 0111 0111
4	Basic	Valid	East (CW)	167.87109375	1	Right	167.87109375	0_11 1011 1011
5	Basic	Valid	Left (CCW)	- 96.15234375 (263.8476563)	1	Left	- 96.15234375 263.8476563	1_01 1101 1101
6	Basic	Valid	Left (CCW)	- 48.1640625 (311.8359375)	1	Left	- 48.1640625 (311.8359375)	1_10 1110 1110
7	Basic	Valid	Left (CCW)	- 0.16479 (359.83521)	1	Left	- 0.17578125 (359.8242188)	1_11 1111 1111
8	Basic	Valid	Right (CW)	0	1	Right	0	0_00 0000 0000
9	Rounded (½ LSB)	Valid	Right (CW)	60.25	1	Right	60.29296875	0_01 0101 0111
10	Rounded (¼ LSB)	Valid	Right (CW)	60.00	1	Right	59.94140625	0_01 0101 0101
11	Invalid	Invalid	Not Applicable	0	0	N/A	0	0_00 0000 0000

Notes:

1. *Input data Sense refers to (a) Positive, being Clockwise (CW), commonly meaning East of North, or (b) Negative, being Counter-Clockwise (CCW), commonly meaning West of North.*

2. *Register **60_{16}** Sense refers to (a) **"1"** for negative or West of North, or (b) **"0"** for positive or East of North.*

3. *Data is shown encoded with the "Sign Bit", e.g., bit **2** being to the left of the "Underscore".*

(2). Indicated Airspeed Data Input - ADS: (§2.2.25.8.2.2)

For each line Item # in the following table (Table 13.a(2)), provide the transponder with Indicated Airspeed data having a value as indicated in the "Data Value" (degrees) Column in the table.

Table 13.a(2): Register 60_{16} - Indicated Airspeed (knots)

Item #	Type of Value	Generic Indicated Airspeed (knots) [Binary (BNR)]		Register 60_{16} Indicated Airspeed (knots)		
		Status	Data Value (knots)	Status (bit 13)	Decimal Value (knots)	Binary Value (bits 14 ---23)
1	Basic	Valid	682	1	682	10 1010 1010
2	Basic	Valid	341	1	341	01 0101 0101
3	Basic	Valid	887	1	887	11 0111 0111
4	Basic	Valid	955	1	955	11 1011 1011
5	Basic	Valid	477	1	477	01 1101 1101
6	Basic	Valid	750	1	750	10 1110 1110
7	Max	Valid	1,024	1	1,023	11 1111 1111
8	Min	Valid	0	1	0	00 0000 0000
9	Rounded (½ LSB)	Valid	342.75	1		01 0101 0111
10	Rounded (¼ LSB)	Valid	341.25	1		01 0101 0101
11	Invalid	Invalid	Not Applicable	0	0	00 0000 0000

(3). Mach Data Input - ADS: (§2.2.25.8.2.3)

For each line Item # in the following table (Table 13.a(3)), provide the transponder with Mach data having a value as indicated in the "Data Value" (degrees) Column in the table.

Table 13.a(3): Register 60_{16} - Mach (milli-Mach)

Item #	Type of Value	Generic Mach (milli-Mach) [Binary (BNR)]		Register 60_{16} Mach (milli-Mach)		
		Status	Data Value (knots)	Status (bit 24)	Decimal Value (knots)	Binary Value (bits 25 ---34)
1	Basic	Valid	1,928	1	1,928	01 1110 0010
2	Basic	Valid	1,364	1	1,364	01 0101 0101
3	Basic	Valid	3,548	1	3,548	11 0111 0111
4	Basic	Valid	3,820	1	3,820	11 1011 1011
5	Basic	Valid	1,908	1	1,908	01 1101 1101
6	Basic	Valid	3,000	1	3,000	10 1110 1110
7	Max	Valid	4,096	1	4,902	11 1111 1111
8	Min	Valid	0	1	0	00 0000 0000
9	Rounded (½ LSB)	Valid	1,370	1	1,372	01 0101 0111
10	Rounded (¼ LSB)	Valid	1,365	1	1,364	01 0101 0101
11	Invalid	Invalid	Not Applicable	0	0	00 0000 0000

(4). Barometric Altitude Rate Data Input - ADS: (§2.2.25.8.2.4)

For each line Item # in the following table (Table 13.a(4)), provide the transponder with Barometric Altitude Rate data having a value as indicated in the "Data Value" (degrees) Column in the table.

Table 13.a(4): Register 60_{16} - Barometric Altitude Rate (feet / minute)								
Item #	**Type of Value**	**Generic Barometric Altitude Rate (feet / minute) [Binary (BNR)]**			**Register 60_{16} Barometric Altitude Rate (feet / minute)**			
		Status	**Sense (See Note 2)**	**Data Value (feet / minute)**	**Status (bit 35)**	**Sense (See Note 2)**	**Decimal Value (feet / minute)**	**Binary Value (bits 36 ---- 45) (See Note 3)**
1	Basic	Valid	0, +, UP	10,912	1	UP	10,912	0_1 0101 0101
2	Basic	Valid	1, -, Down	- 10,912	1	Down	- 10,912	1_0 1010 1011
3	Basic	Valid	1, -, Down	- 4,384	1	Down	- 4,384	1_1 0111 0111
4	Basic	Valid	1, -, Down	- 2,208	1	Down	- 2,208	1_1 1011 1011
5	Basic	Valid	0, +, UP	15,264	1	UP	15,264	0_1 1101 1101
6	Basic	Valid	1, -, Down	- 8,768	1	Down	- 8,768	1_0 1110 1110
7	Basic	Valid	1, -, Down	- 16,384	1	Down	- 16,356	1_0 0000 0000
8	Basic	Valid	0, +, UP	16,356	1	UP	16,352	0_1 1111 1111
9	Rounded (½ LSB)	Valid	0, +, UP	15,248	1	UP	15,264	0_1 1101 1101
10	Rounded (¼ LSB)	Valid	0, +, UP	15,272	1	UP	15,264	0_1 1101 1101
11	Invalid	Invalid	Not Applicable	0	0	N/A	0	0_00 0000 0000

Notes:

1. *Input data Sense refers to (a) Positive, being "UP", or (b) Negative, being "Down".*
2. *Register **60_{16}** Sense refers to (a) **"1"** for negative or "Down", or (b) **"0"** for positive or "UP".*
3. *Data is shown encoded with the "Sign Bit", e.g., bit **36** being to the left of the "Underscore".*

(5). Inertial Vertical Rate Data Input - FMS / IRS: (§2.2.25.8.2.5)

For each line Item # in the following table (Table 13.a(5)), provide the transponder with Inertial Vertical Rate data having a value as indicated in the "Data Value" (degrees) Column in the table.

Table 13.a(5): Register 60_{16} - Inertial Vertical Rate (feet / minute)								
Item #	**Type of Value**	**Generic Inertial Vertical Rate (feet / minute) [Binary (BNR)]**			**Register 60_{16} Inertial Vertical Rate (feet / minute)**			
		Status	**Sense (See Note 2)**	**Data Value (feet / minute)**	**Status (bit 46)**	**Sense (See Note 2)**	**Decimal Value (feet / minute)**	**Binary Value (bits 47 ---- 56) (See Note 3)**
1	Basic	Valid	0, +, UP	10,912	1	UP	10,912	0_1 0101 0101
2	Basic	Valid	1, -, Down	- 10,912	1	Down	- 10,912	1_0 1010 1011
3	Basic	Valid	1, -, Down	- 4,384	1	Down	- 4,384	1_1 0111 0111
4	Basic	Valid	1, -, Down	- 2,208	1	Down	- 2,208	1_1 1011 1011
5	Basic	Valid	0, +, UP	15,264	1	UP	15,264	0_1 1101 1101
6	Basic	Valid	1, -, Down	- 8,768	1	Down	- 8,768	1_0 1110 1110
7	Basic	Valid	1, -, Down	- 16,384	1	Down	- 16,356	1_0 0000 0000
8	Basic	Valid	0, +, UP	16,356	1	UP	16,352	0_1 1111 1111
9	Rounded (½ LSB)	Valid	0, +, UP	15,248	1	UP	15,264	0_1 1101 1101
10	Rounded (¼ LSB)	Valid	0, +, UP	15,272	1	UP	15,264	0_1 1101 1101
11	Invalid	Invalid	Not Applicable	0	0	N/A	0	0_0 0000 0000

Notes:

1. *Input data Sense refers to (a) Positive, being "UP", or (b) Negative, being "Down".*
2. *Register 60_{16} Sense refers to (a) "1" for negative or "Down", or (b) "0" for positive or "UP".*
3. *Data is shown encoded with the "Sign Bit", e.g., bit 47 being to the left of the "Underscore".*

b. **Register 60_{16} Capability Verification:** (§2.2.25.8 –through- 2.2.25.8.3)

Within **1.3** seconds of providing the transponder with data as detailed in Part 13.a., interrogate the transponder with the following GICB Extraction interrogation in order to extract the Register 60_{16} - Heading and Speed Report data.

REGISTER 60_{16} HEADING AND SPEED REPORT GICB EXTRACTION EXTENDED DATA SOURCE INTERROGATION SETUP									
1 ---- 5	6 ---- 8	9 --- 13	14-16	17 -- 20	21 -- 24	25	26	27—28	29 --- 32
				"SD"					
"UF" =	**"PC" =**	**"RR" =**	**"DI" =**	**"IIS" =**	**"RRS =**	**"X" =**	**"LOS" =**	**"XX" =**	**"TMS" =**
4	0	**22** (16 HEX)	**7**	0	**0**	0	0	0	0

Verify that the transponder replies with a **"DF" = 20** reply.

(1). For each line Item # in Table 13.a(1) with **"MB"** field Status (bit **1**) equivalent to that shown in the Status (bit **1**) column of Table 13.a(1).

(2). For each line Item # in Table 13.a(1), with **"MB"** field bit **2** through **12** equivalent to that shown in the Binary Value (bits 2 - **12**) column of Table 13.a(1).

(3). For each line Item # in Table 13.a(2) with **"MB"** field Status (bit **13**) equivalent to that shown in the Status (bit **13**) column of Table 14.a(2).

(4). For each line Item # in Table 13.a(2), with **"MB"** field bits **14** through **23** equivalent to that shown in the Binary Value (bits **14 - 23)** column of Table 13.a(2.

(5). For each line Item # in Table 13.a(3) with **"MB"** field Status (bit **24**) equivalent to that shown in the Status (bit **24**) column of Table 13.a(3).

(6). For each line Item # in Table 13.a(3), with **"MB"** field bits **25** through **34** equivalent to that shown in the Binary Value (bits **25 - 34**) column of Table 13.a(3).

(7). For each line Item # in Table 13.a(4) with **"MB"** field Status (bit **35**) equivalent to that shown in the Status (bit **35**) column of Table 13.a(4).

(8). For each line Item # in Table 13.a(4), with **"MB"** field bits **36** through **45** equivalent to that shown in the Binary Value (bits **36 - 45**) column of Table 13.a(4).

(9). For each line Item # in Table 13.a(5) with **"MB"** field Status (bit **46**) equivalent to that shown in the Status (bit **46**) column of Table 13.a(5).

(10). For each line Item # in Table 13.a(5), with **"MB"** field bits **47** through **56** equivalent to that shown in the Binary Value (bits **47 - 56**) column of Table 13.a(5).

Note: *Cumulative results are as shown in the following table.*

Part 13.b. DF = 20, Heading and Speed -"MB" Field													
Reply Bits:	33	34	35 ---------- 44	45	46 ---- 55	56	57 -------- 66	67	68	69 ------- 77	78	79	80 ---------- 88
"MB" Bits:	1	2	3 ---------- 12	13	14 ----- 23	24	25 -------- 34	35	36	37 ------- 45	46	47	48 --------- 56
Field:	**Magnetic Heading**			**Indicated Airspeed**		**Mach**		**Barometric Altitude Rate**			**Inertial Vertical Rate**		
Data: Item #	Status	Sign	Data	Status	Data	Status	Data	Status	Sign	Data	Status	Sign	Data
1	1	1	01 0101 0101	1	10 1010 1010	1	01 1110 0010	1	0	1 0101 0101	1	0	1 0101 0101
2	1	0	10 1010 1010	1	01 0101 0101	1	01 0101 0101	1	1	0 1010 1011	1	1	0 1010 1011
3	1	1	11 0111 0111	1	11 0111 0111	1	11 0111 0111	1	1	1 0111 0111	1	1	1 0111 0111
4	1	0	11 1011 1011	1	11 1011 1011	1	11 1011 1011	1	1	1 1011 1011	1	1	1 1011 1011
5	1	1	01 1101 1101	1	01 1101 1101	1	01 1101 1101	1	0	1 1101 1101	1	0	1 1101 1101
6	1	1	10 1110 1110	1	10 1110 1110	1	10 1110 1110	1	1	0 1110 1110	1	1	0 1110 1110
7	1	1	11 1111 1111	1	11 1111 1111	1	11 1111 1111	1	1	0 0000 0000	1	1	0 0000 0000
8	1	0	00 0000 0000	1	00 0000 0000	1	00 0000 0000	1	0	1 1111 1111	1	0	1 1111 1111
9	1	0	01 0101 0111	1	01 0101 0111	1	01 0101 0111	1	0	1 1101 1101	1	0	1 1101 1101
10	1	0	01 0101 0101	1	01 0101 0101	1	01 0101 0101	1	0	1 1101 1101	1	0	1 1101 1101
11	0	0	00 0000 0000	0	00 0000 0000	0	00 0000 0000	0	0	0 0000 0000	0	0	0 0000 0000

2.7.7.14 PART 14: Reduced Update Rate (§2.2.25.8.3)

Notes:

1. *The primary intent of Part 3 beyond data validation in Register 60_{16} is to validate Declaration of Capability as data inputs are reduced to rates that are less than the minimum acceptable rate.*

2. *Review all subparagraphs of Part **3** prior to performing tests. This is necessary to establish the appropriate timing between changing data inputs and interrogations.*

a. **Data / Source Change - Set 1:** (§2.2.25.8.2)

(1). Magnetic Heading Data Input: (§2.2.25.8.2.1)

Via an appropriate input interface, set the rate at which valid Magnetic Heading data is provided to less than once per two seconds.

(2). Indicated Airspeed Data Input - ADS: (§2.2.25.8.2.2)

Via an appropriate input interface, set the rate at which valid Indicated Airspeed data is provided to less than once per two seconds.

(3). Mach Data Input - ADS: (§2.2.25.8.2.3)

Via an appropriate input interface, set the rate at which valid Mach data is provided to less than once per two seconds.

(4). Barometric Altitude Rate Data Input - ADS: (§2.2.25.8.2.4)

Via an appropriate input interface, set the rate at which valid Barometric Altitude Rate data is provided to less than once per two seconds.

(5). Inertial Vertical Rate Data Input - FMS / IRS: (§2.2.25.8.2.5)

Via an appropriate input interface, set the rate at which valid Inertial Vertical Rate data is provided to less than once per two seconds.

b. **Register 60_{16} Capability Verification:** (§2.2.25.8 –through- 2.2.25.8.3)

Within **1.3** seconds of providing the transponder with data as detailed in Part 2.a., interrogate the transponder with the following GICB Extraction interrogation in order to extract the Register 60_{16} - Heading and Speed Report data.

REGISTER 60_{16} HEADING AND SPEED REPORT GICB EXTRACTION EXTENDED DATA SOURCE INTERROGATION SETUP									
1 ---- 5	6 ---- 8	9 --- 13	14-16	17 -- 20	21 -- 24	25	26	27—28	29 --- 32
				"SD"					
"UF" =	**"PC" =**	**"RR" =**	**"DI" =**	**"IIS" =**	**"RRS =**	**"X" =**	**"LOS" =**	**"XX" =**	**"TMS" =**
4	0	**22** (16 HEX)	**7**	0	**0**	0	0	0	0

Notes:

1. *The interrogation should initiate the **"B"** timer for **18 ±1.0** seconds since a Comm-B Broadcast is initiated.*

2. *In this case, the Comm-B Broadcast is caused by the contents of Register 60_{16} changing as provision of all parameter data has effectively been terminated. This change causes a change to Register 17_{16}, which then forces a change to Register 10_{16}, which then results in the initiation of the Comm-B Broadcast.*

(1). Verify that the transponder replies with a **"DF" = 20** reply.

(2). During replies to this interrogation sequence and subsequent interrogations during this test procedure, monitor the **"DR"** field. If the **"DR"** field changes to **4, 5, 6,** or **7**, then the transponder has initiated a Comm-B Broadcast.

When the **"DR"** field changes, start a Test Timer to monitor that the **"B"**-Timer runs for **18 ±1.0** seconds.

"DR" = 4 or 5 if TCAS Information IS NOT available

= 6 or 7 if TCAS Information IS available.

(3). Verify that the **"DF"=20** reply **"MB"** field provides Data with:

Part 2.b.(3) DF = 20, Heading and Speed "MB" Field													
Reply Bits:	33	34	35 ---------- 44	45	46 ---- 55	56	57 -------- 66	67	68	69 ------- 77	78	79	80 ---------- 88
"MB" Bits:	1	2	3 ---------- 12	13	14 ----- 23	24	25 -------- 34	35	36	37 ------- 45	46	47	48 --------- 56
Field:	**Magnetic Heading**			**Indicated Airspeed**		**Mach**		**Barometric Altitude Rate**			**Inertial Vertical Rate**		
	Status	Sign	Data	Status	Data	Status	Data	Status	Sign	Data	Status	Sign	Data
Data:	0	0	00 0000 0000	0	00 0000 0000	0	00 0000 0000	0	0	0 0000 0000	0	0	0 0000 0000

c. **Common Usage GICB Capability Report, Register 17_{16}:** (§2.2.25.2.2.6 and 2.2.25.2.2.7)

Within **FIVE** (5) seconds of the interrogation / reply sequence in Part 3.b., interrogate the transponder with the following GICB Extraction interrogation in order to extract the Register 17_{16} Common Usage GICB Capability Report:

REGISTER 17_{16} COMMON USAGE GICB CAPABILITY GICB EXTRACTION EXTENDED DATA SOURCE INTERROGATION SETUP									
1 ---- 5	6 ---- 8	9 --- 13	14-16	17 -- 20	21 -- 24	25	26	27—28	29 --- 32
				"SD"					
"UF" = 4	**"PC" = 0**	**"RR" = 17** (11 HEX)	**"DI" = 7**	**"IIS" = 0**	**"RRS = 7**	**"X" = 0**	**"LOS" = 0**	**"XX" = 0**	**"TMS" = 0**

Verify that the transponder replies with a "**DF**" = **20** reply with:

Bit **56** (bit **24** of the **"MB"** field) set to "**0**" to indicate that Register 60_{16} servicing capability has been changed as data for Register 60_{16} has been terminated.

d. **Mode S Specific Services GICB Capability, Register 18_{16}:** (§2.2.25.3)

Within **FIVE** (5) seconds of the interrogation / reply sequence in Part 3.b., interrogate the transponder with the following GICB Extraction interrogation in order to extract the Register 18_{16} Mode S Specific Services GICB Capability:

REGISTER 18_{16} MODE S SPECIFIC SERVICES CAPABILITY GICB EXTRACTION EXTENDED DATA SOURCE INTERROGATION SETUP									
1 ---- 5	6 ---- 8	9 --- 13	14-16	17 -- 20	21 -- 24	25	26	27—28	29 --- 32
				"SD"					
"UF" = 4	**"PC" = 0**	**"RR" = 17** (11 HEX)	**"DI" = 7**	**"IIS" = 0**	**"RRS = 8**	**"X" = 0**	**"LOS" = 0**	**"XX" = 0**	**"TMS" = 0**

Verify that the transponder replies with a "**DF**" = **20** reply with:

(1). Bit **64** (bit **32** of the **"MB"** field) set to "**1**" to indicate that Register 19_{16} servicing capability has been established during the power-on cycle.

(2). Bit **65** (bit **33** of the **"MB"** field) set to **"1"** to indicate that Register 18_{16} servicing capability has been established during the power-on cycle.

(3). Bit **66** (bit **34** of the **"MB"** field) set to **"1"** to indicate that Register 17_{16} servicing capability has been established during the power-on cycle.

e. **Mode S Specific Services GICB Capability, Register 19_{16}:** (§2.2.25.3)

Within **FIVE** (5) seconds of the interrogation / reply sequence in Part 3.b., interrogate the transponder with the following GICB Extraction interrogation in order to extract the Register 19_{16} Mode S Specific Services GICB Capability:

REGISTER 19_{16} MODE S SPECIFIC SERVICES CAPABILITY GICB EXTRACTION EXTENDED DATA SOURCE INTERROGATION SETUP									
1 ---- 5	6 ---- 8	9 --- 13	14-16	17 -- 20	21 -- 24	25	26	27—28	29 --- 32
				"SD"					
"UF" =	**"PC" =**	**"RR" =**	**"DI" =**	**"IIS" =**	**"RRS =**	**"X" =**	**"LOS" =**	**"XX" =**	**"TMS" =**
4	0	**17** (11 HEX)	**7**	0	**9**	0	0	0	0

Verify that the transponder replies with a "**DF**" = **20** reply with:

Bit **49** (bit **17** of the **"MB"** field) set to "**1**" to indicate that Register 60_{16} servicing capability has been established during the power-on cycle.

f. **Comm-B Broadcast Validation:** (§2.2.25.1.4)

Continue to interrogate the transponder with the following GICB Extraction interrogation in order to extract the Register 60_{16} - Heading and Speed Report data monitor the **"DR"** field in the reply.

REGISTER 60_{16} HEADING AND SPEED REPORT GICB EXTRACTION EXTENDED DATA SOURCE INTERROGATION SETUP									
1 ---- 5	6 ---- 8	9 --- 13	14-16	17 -- 20	21 -- 24	25	26	27—28	29 --- 32
				"SD"					
"UF" =	**"PC" =**	**"RR" =**	**"DI" =**	**"IIS" =**	**"RRS =**	**"X" =**	**"LOS" =**	**"XX" =**	**"TMS" =**
4	0	**22** (16 HEX)	**7**	0	**0**	0	0	0	0

Within **TEN** (10) seconds of providing the transponder with data as detailed in Part 2.a.,

Verify that the **"DR"** field in **DF=20** replies is set to **"DR" = 4, 5, 6**, or **7** to indicate that a Comm-B Broadcast is active.

g. **Comm-B Broadcast Extraction:** (§2.2.25.1.4)

After determining that the **"DR"** field has been set to **"DR"= 4, 5, 6,** or **7** in Part 3.f., interrogate the transponder with the following Comm-B Extraction interrogation in order to extract the Comm-B broadcast message which should be the Data Link Capability Report contained in Register 10_{16}.

COMM-B BROADCAST EXTRACTION INTERROGATION SETUP									
1 ---- 5	6 ---- 8	9 --- 13	14-16	17 -- 20	21 -- 24	25	26	27—28	29 --- 32
				"SD"					
"UF" =	**"PC" =**	**"RR" =**	**"DI" =**	**"IIS" =**	**"RRS =**	**"X" =**	**"LOS" =**	**"XX" =**	**"TMS" =**
4	0	**16** (10 HEX)	**7**	0	**0**	0	0	0	0

Verify that the transponder replies with a "**DF**" = **20** reply with:

(1). "DR" = 4 or 5 if TCAS Information **IS NOT** available

= 6 or 7 if TCAS Information **IS** available.

(2). Bit **33** –through- **40** (bit 1 –through- **8** of the "MB" field) set to 10 HEX (**0001 0000**).

(3). Bit **57** ["Mode S Specific Services Capability" (bit **25** of the "MB" field)] set to ONE (1) to indicate that the transponder has established Mode S Specific Services Capability.

(4). Bit **67** ["SIC" subfield (bit **35** of the "MB" field)] set to ONE (1) to indicate that the transponder does have "SI" capability.

(5). Bit **68** [Common Usage GICB Capability Report Bit (bit **36** of the **"MB"** field)] toggled to **"0"** (from **"1"**) to indicate that Register 17_{16} has changed.

h. **Comm-B Broadcast due to Data Link Capability Change Termination:** (§2.2.25.1.4)

Continue to interrogate the transponder with the interrogation described in Part 3. g. (e.g., the last step) until the transponder replies with a "DF" = 20 reply with "DR" NOT EQUAL to 4, 5, 6, or 7.

Verify that the elapsed time of the Test Timer started in Part 3.b.(2) is 18 +/- 1 second.

Note: *At this time, the "B" timer started in Part 3.b.(2). as broadcast due to a change in Data Link Capability should have terminated.*

RHS Commentary: *Added new Part 14 in order to test under reduced data rate conditions. Remove this commentary after making change to review copy.*

2.7.7.15 PART 15: Multiple Data Sources (§2.2.25 –through- 2.2.25.4, and 2.2.25.8)

If Multiple Data Sources of Register 60_{16} parameters are provided to the Unit-Under-Test (UUT), then **REPEAT** all applicable sections of Part **2** for each additional data source that was not tested while performing Parts **1** through **13** above.

2.8 Generic Register XX Test Procedures (§2.2.26)

Introduction:

The following general test procedure is intended to provide guidelines for minimal verification that newly implemented GICB registers are properly being serviced.

2.8.1 Purpose and Definition (§2.2.26.1)

Note: *In the following subsections,* ***"ddd"*** *means the decimal equivalent* ***to*** XX_{16}. *For instance, for* 40_{16}, ***"ddd"*** = 64_{10} = 64.

For any newly added given Register $\mathbf{XX_{16}}$, refer to Appendix B, Table **B3-ddd** for appropriate format and definition of the register.

2.8.2 Data Requirement (§2.2.26.2)

a. Ensure that no data is being provided to the transponder that could be used to fill any field in the Register $\mathbf{XX_{16}}$ that is being tested.

b. Interrogate the transponder using GICB protocols as specified in **§**2.2.19.1.12.3 (refers to **§**2.2.19.1.12.1 and **§**2.2.19.1.12.2).

Note 1: *See **§**2.2.7.13.b as an example interrogation used to extract Register 60_{16}.*

c. Verify that the transponder replies with a "DF" = 20 reply with Bit **33** –through- **88** (bit **1** –through- **56** of the "MB" field) set to ALL ZERO (0).

Note 2: *Some registers are required to fill bit 1 –through-8 with the Register Number, e.g., $\mathbf{XX_{16}}$. In such cases, bits 1 –through- 8 of the "MB" field will contain the register number XX_{16} and the remaining bits (9 –through- 56) of the "MB" field will be set to ZERO (0).*

2.8.2.1 Data Field "y" (§2.2.26.2.1)

a. Via an appropriate interface, provide the tranponder with appropriate valid data for each parameter **"y"** in register $\mathbf{XX_{16}}$ that is to be tested.

b. Interrogate the transponder using GICB protocols as specified in **§**2.2.19.1.12.3 (refers to **§**2.2.19.1.12.1 and **§**2.2.19.1.12.2).

Note 1: *See **§**2.2.7.13.b as an example interrogation used to extract Register 60_{16}.*

c. For each **"y"** parameter, verify that the transponder replies with an "MB" field having:

(1). Each **"y"** parameter encoded in the proper register location

(2). Each **"y"** parameter encoded in two's complement arithmetic unless otherwise specified.

(3). Each **"y"** parameter value properly rounded to preserve accuracy of +/- ½ LSB.

(4). Status bit for each applicable **"y"** parameter set to ONE (1) if data is valid and set to ZERO (0) if data is invalid.

2.8.3 Update Rate (§2.2.26.3)

Change the data provided to the transponder and repeat the interrogation given in **§**2.8.2.1.b as necessary to complete the following steps:

a. For each **"y"** parameter, verify that the data changes to the appropriate value required in **§**2.8.2.1.c within the minimum update interval time specified in Appendix B, Table B-1 for the given Register $\mathbf{XX_{16}}$ being tested.

b. If the appropriate value required in §2.8.3.a cannot be realized within twice the minimum update interval time specified or 2 seconds (whichever is greater), verify that the parameter **"y"** subfield and its associated status bit is set to ALL ZERO (0).

2.8.4 Service Reporting (§2.2.26.4)

Change the data provided to the transponder and repeat the interrogation given in §2.8.2.1.b as necessary to complete the following steps:

a. Verify that the servicing of Register $\mathbf{XX_{16}}$ during the power-on cycle of the transponder is properly reported in Registers 18_{16} -through- $1C_{16}$ as required in Appendix B, Table B-24 –to- B-28.

b. Verify that the real-time (not just since power-on) servicing of Register $\mathbf{XX_{16}}$ is properly reported in Register 17_{16} (see Appendix B, Table B – 23) if such reporting is required for Register $\mathbf{XX_{16}}$.

c. Verify that an appropriate Comm. – B Broadcast is initiated if a change to Register $\mathbf{XX_{16}}$ forces a change to Register 10_{16}.

Note: *See §2.7.7.2.b.(2) as an example of validating presence of the Broadcast using Register 60_{16}.*

d. Extract the Broadcast and verify that the contents of Register 10_{16} have been changed in accordance with the change action affecting Register $\mathbf{XX_{16}}$ under test.

Note: *See §2.7.7.2.g as an example of validating the Broadcast using Register 60_{16} as the register forcing the change to Register 10_{16}.*

END OF ELS/EHS/GENERIC TEST PROCEDURES__RHS

3 INSTALLED EQUIPMENT PERFORMANCE

3.1 Equipment Installation

3.1.1 Equipment Accessibility

3.1.2 Inadvertent Turn Off

3.1.3 Displays

3.1.4 Aircraft Power Source

3.1.5 Transmission Line(s)

3.1.6 Antenna Location

3.1.7 Mutual Suppression

3.2 Conditions of Test

3.2.1 Power Input

3.2.2 Interference Effects

3.2.3 Environment

3.2.4 Adjustment of Equipment

3.2.5 Warm-up Period

3.2.6 Radiation Pattern

3.3 Test Procedures for Installed Equipment Performance

3.3.1 Conformity Inspection

3.3.2 Bench Tests

3.3.3 Reply Frequency

3.3.4 Framing Pulse Spacing

3.3.5 Reply Codes

3.3.6 Pressure Altitude Transmissions

3.3.7 Altitude Reporting Test

3.3.8 Reply Pulse Width

3.3.9 Receiver Sensitivity

3.3.10 Transmitter Power Output

3.3.11 Mode S Address

3.3.12 Received Reply

3.3.13 Airspeed Fixed Field

3.3.14 On-the-Ground Condition

3.3.15 Diversity Antenna Installations

3.4 Flight Test Procedures

Membership

RTCA SPECIAL COMMITTEE 209
Minimum Operational Performance Standards
for
Mode S Airborne Beacon & Data Link System

Co-Chairs

Thomas Pagano	FAA Technical Center
Robert Saffell	Rockwell Collins

Secretary

Gary Furr	Engility Corporation

Members and Advisors