RTCA, Inc.
1828 L Street, NW, Suite 805
Washington, DC 20036-5133 USA

MINIMUM OPERATIONAL PERFORMANCE STANDARDS FOR AIR TRAFFIC CONTROL RADAR BEACON SYSTEM/MODE SELECT (ATCRBS/MODE S) AIRBORNE EQUIPMENT

Draft
Version 0.7

RTCA/DO-181D
MM DD, YYYY
DO-181D supersedes DO-181C and all published changes thereto
Appendix B to DO-181D supercedes DO-218B

Prepared by SC-209
© 2007 RTCA, Inc.

Copies of this document may be obtained from

RTCA, Inc.
1828 L Street, NW, Suite 805
Washington, DC 20036-5133 USA

Telephone: 202-833-9339
Facsimile: 202-833-9434
Internet: www.rtca.org

Please contact RTCA for price and ordering information.

FOREWORD

This document was prepared by RTCA Special Committee 209 (SC-209). It was approved by the RTCA Program Management Committee on MM DD, 2007, and supersedes RTCA/DO-181C, *Minimum Operational Performance Standards for Air Traffic Control Radar Beacon System/Mode Select (ATCRBS/MODE S) Airborne Equipment*, issued June 12, 2001, and all published changes and errata. Appendix B of DO-181D supercedes RTCA/DO-218B.

RTCA, Incorporated is a not-for-profit corporation formed to advance the art and science of aviation and aviation electronic systems for the benefit of the public. The organization functions as a Federal Advisory Committee and develops consensus based recommendations on contemporary aviation issues. RTCA's objectives include but are not limited to:

- coalescing aviation system user and provider technical requirements in a manner that helps government and industry meet their mutual objectives and responsibilities;

- analyzing and recommending solutions to the system technical issues that aviation faces as it continues to pursue increased safety, system capacity and efficiency;

- developing consensus on the application of pertinent technology to fulfill user and provider requirements, including development of minimum operational performance standards for electronic systems and equipment that support aviation; and

- assisting in developing the appropriate technical material upon which positions for the International Civil Aviation Organization and the International Telecommunication Union and other appropriate international organizations can be based.

The organization's recommendations are often used as the basis for government and private sector decisions as well as the foundation for many Federal Aviation Administration Technical Standard Orders.

Since RTCA is not an official agency of the United States Government, its recommendations may not be regarded as statements of official government policy unless so enunciated by the U.S. government organization or agency having statutory jurisdiction over any matters to which the recommendations relate.

CHANGE HISTORY

Date / Version	Description
June 12, 2001/DO-181C	Document published as DO-181C, supplied by RTCA, without Change 1 and without Errata applied
Feb 14, 2006 / DO-181D v0.1	DO-181C with Errata applied presented during SC-209 Meeting #1 as WP01-05. Additional formatting in the process of being applied to bring the document into compliance with current RTCA standards.
May 2006, DO-181D v0.2	(1) Incorporation of changes to test procedures that were approved during Meeting #2 in WP02-05R1, where changes were highlighted in yellow. (2) All references to internal sections were hyperlinked to make future re-ordering of sections more automatic. (3) All Figures 2-4 through 2-32 were moved to the point of their first reference in the document (which actually caused the "List of Figures" to be in mixed ordering sequence). (4) Reduction in the entries in section §1.7 to just "Definitions of Key Acronyms and Terms," and creation of Appendix A for Acronymns and Definitions of Terms. (5) Re-ordering of entries in section §2.2.14.4 to be alphabetical, where moved section headings were highlighted in gray. (6) As directed by SC-209 during Meeting #2, implemented changes to test increments from 5 dB steps to one (1) dB steps. (7) Changed all occurrences of P1, P2, P3, P4, P5 and P6 to use subscripts to be consistent with the SARPs and DO-144A. (8) Re-oriented Table 2.2.16-1 90 degrees to be more readable.
June 2006, DO-181D-v0.3	(1). Implemented the suggested re-ordering of sections in §2.2 accomplished as per Working Paper WP02-06R1, where the sections that were moved have their section headings highlighted in gray.
July 2006, DO-181D-v0.4	(1) Began replacing all of the Figures with Visio produced figures. Some of the figures are actually produced using the MS-Word "Table" capability.
October 2006, DO-181D-v0.5	(1) The Minutes to Meeting #3 document several changes that were originally identified in WP02-05R1 that were modified during Meeting #3 and whose modifications were documented in the Minutes to Meeting #3 and in WP02-05R2. Those changes were implemented/reversed in this version. (2) Five Working Papers were presented during Meeting #4, including WP04-11, WP04-12R1, WP04-14R1, WP04-15R1 and WP04-16 in which changes were proposed and either agreed to be changed or agreed to leave as originally written. The changes which were agreed to be made in all five of these Working Papers were implemented into this version. (3) During Meeting #2 in Working Paper WP02-06R1 as part of the restructuring of section 2.2 in DO-181C, it was specified that §2.2.17.1.1 would be deleted. With further discussion in Meeting #4 on breaking down Level 2 transponders, it was agreed that this section should be restored into the draft MOPS document, which was accomplished in this version.
December 2006, DO-181D-v0.6	(1) Updated §2.2.13.3 with info on the MSP Channel header. (2) Added definition of MSP Channel Header into §2.2.14.4.24 and TMS field at §2.2.14.4.39. (3) SC-209 agreed upon changes associated with consolidated comments identified in WP05-05R1. (4) SC-209 agreed upon changes that are identified in WP05-12R1. (5) SC-209 agreed upon changes that are identified in WP05-07.
February 2007, DO-181D-v0.7	(1) As agreed to during the Joint Plenary Session with WG-49, updated §2.2.13.1.1 related to the handling of non-standard 24-bit addresses to match exactly that text in the available draft of ED-73C, §3.17.1. (2) Correction to Note #2 in Figure 2-19. (3) Addition of sections §1.8 and §1.9 to introduce Appendix B and C.

TABLE OF CONTENTS

1 PURPOSE AND SCOPE 1

1.1 Introduction 1

1.2 System Overview 1
1.2.1 The Function of Mode S 1
1.2.2 Major Operating Characteristics 2
1.2.3 System Performance 2
1.2.3.1 Surveillance Performance 2
1.2.3.2 Data Link Performance 3
1.2.4 Basic System Protocol 3
1.2.5 Mode S Message Content 4
1.2.5.1 Address/Parity 4
1.2.5.2 Surveillance 4
1.2.5.3 Data Link Communications 4

1.3 Operational Goals 5

1.4 Operational Applications 5
1.4.1 The ATCRBS Environment 5
1.4.2 The Mode S Environment 5
1.4.3 Mode S Transponder Levels 5
1.4.3.1 Level 1 Transponders 6
1.4.3.2 Level 2 Transponders 6
1.4.3.3 Level 3 Transponders (Uplink ELM Capability) 7
1.4.3.4 Level 4 Transponders (Full ELM Capability) 7
1.4.3.5 Level 5 Transponders (Enhanced Data Link Protocol Capability) 7
1.4.3.6 Additional Features 8
1.4.4 Use of the Mode S Data Link 8
1.4.5 Airborne Equipment 8

1.5 Assumptions 9

1.6 Test Procedures 9
1.6.1 Environmental Tests 9
1.6.2 Detailed Test Procedures 9
1.6.3 Installed System Tests 10

1.7 Definitions of Key Acronyms and Terms 10

2 MODE S TRANSPONDER EQUIPMENT PERFORMANCE REQUIREMENTS AND TEST PROCEDURES 12

2.1 General Requirements for All Equipment 12
2.1.1 Airworthiness 12
2.1.2 General Performance 12
2.1.3 Federal Communications Commission Rules 12
2.1.4 Fire Protection 12
2.1.5 Operation of Controls 12
2.1.6 Accessibility of Controls 12
2.1.7 Flight Crew Control Functions 12
2.1.8 Optional Crew Control Functions 13
2.1.9 Effects of Tests 13
2.1.10 Equipment Configuration 13
2.1.11 Interrogation Signals 14
2.1.11.1 Interrogation Carrier Frequency 14

2.1.11.2 Measurement Convention 14
2.1.11.3 Received PAM Signals 14
2.1.11.3.1 Pulse Shapes 15
2.1.11.3.2 Pulse Patterns 15
2.1.11.3.3 Relative Pulse Amplitudes 16
2.1.11.4 Received DPSK Signals 16
2.1.11.4.1 Pulse Shapes 17
2.1.11.4.2 Relative Pulse Amplitudes 17
2.1.11.4.3 Phase Reversals 17
2.1.11.4.4 Spacings 17
2.1.11.4.5 Information Content 17

2.2 Minimum Performance Standards — Standard Conditions and Signals 18
2.2.1 Definition of Standard Conditions 18
2.2.2 Receiver Characteristics 18
2.2.2.1 Interrogation Tolerances 18
2.2.2.2 Sensitivity Variation With Frequency 18
2.2.2.3 Bandwidth 18
2.2.2.4 Sensitivity and Dynamic Range 19
2.2.3 Transmitter Characteristics 19
2.2.3.1 Reply Transmission Frequency 19
2.2.3.2 RF Peak Output Power 19
2.2.3.3 Unwanted Output Power 20
2.2.3.4 Reply Rate Capability 20
2.2.3.4.1 ATCRBS Reply Rate Capability 20
2.2.3.4.2 Mode S Reply Rate Capability 21
2.2.3.5 Mode S ELM Peak Reply Rate 21
2.2.4 Reply Pulse Characteristics 21
2.2.4.1 ATCRBS Replies 22
2.2.4.1.1 Framing Pulses 22
2.2.4.1.2 Information Pulses 22
2.2.4.1.3 ATCRBS-SPI 22
2.2.4.1.4 ATCRBS Reply Pulse Shape 22
2.2.4.1.5 ATCRBS Reply Pulse Spacing Tolerance 23
2.2.4.1.6 ATCRBS Reply Delay and Jitter 23
2.2.4.2 Mode S Replies 23
2.2.4.2.1 Mode S Preamble 23
2.2.4.2.2 Mode S Data Pulses 24
2.2.4.2.3 Mode S Reply Pulse Shape 24
2.2.4.2.4 Mode S Reply Pulse Spacing Tolerance 24
2.2.4.2.5 Mode S Reply Delay and Jitter 25
2.2.5 Side Lobe Suppression Characteristics 25
2.2.5.1 Side Lobe Suppression, ATCRBS, ATCRBS-Only All-Call, and ATCRBS/Mode S All-Call 25
2.2.5.2 Side Lobe Suppression, Mode S Formats 26
2.2.6 Pulse Decoder Characteristics 27
2.2.6.1 Pulse Level Tolerances 27
2.2.6.1.1 ATCRBS/Mode S All-Call 27
2.2.6.1.2 ATCRBS-Only All-Call 27
2.2.6.2 Pulse Position Tolerances 27
2.2.6.3 Pulse Duration Tolerances 28
2.2.6.4 Sync Phase Reversal Position Tolerance 28
2.2.7 Desensitization and Recovery Characteristics 29
2.2.7.1 Echo Suppression 29

2.2.7.1.1 Echo Suppression Desensitization 29
2.2.7.1.2 Narrow Pulse Performance 29
2.2.7.2 Recovery 29
2.2.7.2.1 Recovery From a Mode S Interrogation If No Reply Is Required 29
2.2.7.2.2 Not Used ..... **Error! Bookmark not defined.**
2.2.7.2.3 Recovery From a Suppression Pair 29
2.2.7.2.4 Recovery From a Mode S Interrogation Which Has Not Been Accepted 29
2.2.7.2.5 Recovery From Unaccepted ATCRBS/Mode S and ATCRBS-Only All-Calls 30
2.2.7.2.6 Dead Time 30
2.2.7.3 Reply Rate Limiting 30
2.2.7.3.1 ATCRBS Reply Rate Limiting 30
2.2.7.3.2 Mode S Reply Rate Limiting 30
2.2.8 Response in the Presence of Interference 30
2.2.8.1 Response in the Presence of Low Level Asynchronous Interference 30
2.2.8.2 Response in the Presence of a Standard Interfering Pulse 31
2.2.8.3 Response in the Presence of Pulse Pair Interference 31
2.2.8.4 Response in the Presence of TACAN/DME and JTIDS Interference 31
2.2.8.5 Simultaneous Interrogation of Mode A and Mode C 32
2.2.9 Undesired Replies 32
2.2.9.1 ATCRBS 32
2.2.9.2 Mode S 32
2.2.10 Self Test and Monitor(s) 32
2.2.10.1 Self Test 32
2.2.10.2 Squitter Monitor 33
2.2.10.3 Mode S Address Verification 33
2.2.10.4 Failure Annunciation 33
2.2.11 Response to Mutual Suppression Pulses 33
2.2.12 Diversity Operations 34
2.2.12.1 Diversity Antenna Selection and Selection Threshold 34
2.2.12.2 Received Signal Delay Tolerance 35
2.2.12.3 Diversity Transmission Channel Isolation 35
2.2.12.4 Reply Delay of Diversity Transponders 35
2.2.12.5 Squitter Antenna Selection 35
2.2.12.5.1 Acquisition Squitter 35
2.2.12.5.2 Extended Squitter 36
2.2.13 Data Handling and Interfaces 36
2.2.13.1 Direct Data 36
2.2.13.1.1 Fixed Direct Data 36
2.2.13.1.2 Variable Direct Data 37
2.2.13.2 Indirect Data 40
2.2.13.2.1 Interfaces for Indirect Data 40
2.2.13.2.2 Integrity of Interface Data Transfer 40
2.2.13.3 Standard Transaction Interfaces 41
2.2.13.3.1 Uplink Interface 41
2.2.13.3.2 Downlink Interface 42
2.2.13.4 ELM Service Interfaces 43
2.2.14 Description of the Mode S Signal Format 43
2.2.14.1 Format Structure, Interrogation and Reply 43
2.2.14.2 Bit Numbering and Sequence 46
2.2.14.3 Fields 46
2.2.14.3.1 Essential Fields 46
2.2.14.3.2 Mission Fields 46
2.2.14.3.3 Subfields 46
2.2.14.4 Field Descriptions 46

2.2.14.4.1 AA Address, Announced 48
2.2.14.4.2 AC Altitude Code 48
2.2.14.4.3 AF Application Field 49
2.2.14.4.4 AP Address/Parity 49
2.2.14.4.5 AQ Acquisition Special 49
2.2.14.4.6 CA Transponder Capability 49
2.2.14.4.7 CC: Crosslink Capability 50
2.2.14.4.8 CF Control Field 50
2.2.14.4.9 CL Code Label 50
2.2.14.4.10 DF Downlink Format 50
2.2.14.4.11 DI Designator Identification 51
2.2.14.4.12 DR Downlink Request 51
2.2.14.4.13 DS: Comm-B Data Selector 51
2.2.14.4.14 FS Flight Status 52
2.2.14.4.15 IC Interrogator Code 52
2.2.14.4.16 ID Identification (4096 code) 52
2.2.14.4.17 II Interrogator Identification 52
2.2.14.4.18 KE Control, ELM 53
2.2.14.4.19 MA Message, Comm-A 53
2.2.14.4.20 MB Message, Comm-B and BDS B-Definition Subfield 53
2.2.14.4.21 MC Message, Comm-C 53
2.2.14.4.22 MD Message, Comm-D 53
2.2.14.4.23 ME Message, Extended Squitter 54
2.2.14.4.24 MU Message, Comm-U 54
2.2.14.4.25 MV Message, Comm-V 54
2.2.14.4.26 NC Number of C-Segment 54
2.2.14.4.27 ND Number of D-Segment 54
2.2.14.4.28 PC Protocol 55
2.2.14.4.29 PI Parity/Interrogator Identity 55
2.2.14.4.30 PR Probability of Reply 56
2.2.14.4.31 RC Reply Control 56
2.2.14.4.32 RI Reply Information, Air-To-Air 57
2.2.14.4.33 RL Reply Length 57
2.2.14.4.34 RR Reply Request 58
2.2.14.4.35 SD Special Designator and IIS, Subfield in SD 58
2.2.14.4.36 SI Surveillance Identifier 58
2.2.14.4.37 SL TCAS Sensitivity Level Report 59
2.2.14.4.38 UF Uplink Format 59
2.2.14.4.39 UM Utility Message in DF=4, 5, 20, 21 59
2.2.14.4.40 VS Vertical Status 59
2.2.14.4.41 Free and Unassigned Coding Space 60
2.2.14.4.42 Future Coding 60
2.2.15 Antenna 60
2.2.15.1 Frequency Requirements 60
2.2.15.2 Impedance and VSWR 60
2.2.15.3 Polarization 60
2.2.15.4 Radiation Pattern 60
2.2.16 Power Interruption 60
2.2.17 Mode S Transponders 61
2.2.18 Level 1 Mode S Transponder 61
2.2.18.1 Mode S Formats 61
2.2.18.2 Mode S Protocols 62
2.2.18.2.1 Error Protection (Figure 2-9 and Figure 2-10) 62
2.2.18.2.2 Interrogation Acceptance Protocol (Figure 2-11) 65

2.2.18.2.3 Interrogation Reply Coordination 67
2.2.18.2.4 Lockout Protocol (Figure 2-12) 67
2.2.18.2.5 Multisite Lockout Protocol (Figure 2-12) 68
2.2.18.2.6 Acquisition Squitter Protocols 69
2.2.18.2.7 Flight Status and Vertical Status Protocols (Figure 2-13) 71
2.2.18.2.8 Capability Reporting 72
2.2.18.2.9 All-Call Reply Protocol 72
2.2.18.2.10 Reply Content (Figure 2-14) 73
2.2.18.2.11 Data Handling and Interfaces 73
2.2.19 Minimum Level 2 Transponder Description 73
2.2.19.1 Minimum Level 2 Transponder Requirements 75
2.2.19.1.1 Error Protection 77
2.2.19.1.2 Information Transfer 77
2.2.19.1.3 Interrogation-Reply Coordination (Figure 2-17) 77
2.2.19.1.4 Lockout Protocols (Figure 2-12) 80
2.2.19.1.5 Flight and Vertical Status Protocols (Figure 2-13) 80
2.2.19.1.6 Capability Report 80
2.2.19.1.7 Reply Content (Figure 2-14) 80
2.2.19.1.8 UM Protocol (Figure 2-18) 81
2.2.19.1.9 Comm-A Protocol 82
2.2.19.1.10 Broadcast Protocol 82
2.2.19.1.11 Comm-B Protocol (Figure 2-19) 82
2.2.19.1.11.1 Data Source Designators 83
2.2.19.1.11.2 Extended Data Source Designators 84
2.2.19.1.11.3 Ground-Initiated Comm-B 84
2.2.19.1.11.4 Air-Initiated Comm-B 84
2.2.19.1.11.4.1 Comm-B Broadcast 84
2.2.19.1.11.5 Data Link Capability Report 85
2.2.19.1.11.6 Subfields in MB for Data Link Capability Report 85
2.2.19.1.11.7 Coding of the Data Link Capability Report 85
2.2.19.1.11.8 Updating of the Data Link Capability Report 86
2.2.19.1.12 Aircraft Identification Reporting and AIS Aircraft Identification Subfield in MB86
2.2.19.1.13 Linked Comm-A Coding 88
2.2.19.1.14 Multisite Message Protocol 88
2.2.19.1.15 Comm-U/V Protocol 88
2.2.19.1.16 Data Handling and Interfaces 88
2.2.19.1.17 TCAS Crosslink Protocol 88
2.2.19.2 The Multisite Message Protocol 88
2.2.19.2.1 Multisite Data Formats 89
2.2.19.2.1.1 Subfields in SD 89
2.2.19.2.1.2 Subfields in UM for Multisite Protocols 91
2.2.19.2.2 Multisite Common Protocols 92
2.2.19.2.2.1 Multisite Timers 92
2.2.19.2.2.2 Interrogator Identity Report 92
2.2.19.2.3 Multisite Comm-B Protocol (Figure 2-19) 92
2.2.19.2.3.1 Multisite Comm-B Reservation 92
2.2.19.2.3.2 Multisite Directed Comm-B Transmissions 93
2.2.19.2.3.3 Multisite Comm-B Closeout 93
2.2.19.2.3.4 Automatic Comm-B Closeout 94
2.2.19.2.3.5 Significance of PC Command 94
2.2.19.3 Additional Features 94
2.2.19.3.1 Diversity 94
2.2.19.3.2 Mutual Suppression System 94
2.2.20 Level 3 & Level 4 Transponder – Extended Length Message (ELM) Protocols 94

2.2.20.1 Level 3 Uplink ELM 95
2.2.20.1.1 Uplink ELM Capability 95
2.2.20.1.1.1 Comm-C/ELM Protocol (Figure 2-20 and Figure 2-21) 95
2.2.20.1.1.1.1 Initializing Segment Transfer 95
2.2.20.1.1.1.2 Intermediate Segment Transfer 96
2.2.20.1.1.1.3 Final Segment Transfer 96
2.2.20.1.1.1.4 Completed Message 96
2.2.20.1.1.1.5 Acknowledgment Reply 96
2.2.20.1.1.1.6 TAS Transmission Acknowledgment, Subfield in MD 96
2.2.20.1.1.1.7 Closeout 97
2.2.20.1.1.1.8 Information Transfer 97
2.2.20.1.2 Uplink Interface – Interrogator Identity 97
2.2.20.1.3 Multisite Uplink ELM Protocol (Figure 2-20 and Figure 2-21) 97
2.2.20.1.3.1 Multisite Comm-C Reservations 99
2.2.20.1.3.2 Multisite Comm-C Delivery 99
2.2.20.1.3.3 Multisite Comm-C Closeout 100
2.2.20.1.3.4 Automatic Comm-C Closeout 100
2.2.20.1.3.5 Significance of PC Command 100
2.2.20.1.4 Uplink Interface – Data Rate 100
2.2.20.2 Level 4 Downlink ELM 101
2.2.20.2.1 Full ELM Capability (Figure 2-22 and Figure 2-23) 101
2.2.20.2.1.1 The Comm-D/ELM Protocol (Figure 2-23) 101
2.2.20.2.1.1.1 Initialization 102
2.2.20.2.1.1.2 Authorization and Transmission 102
2.2.20.2.1.1.3 SRS Segment Request Subfield in MC 102
2.2.20.2.1.1.4 Closeout 102
2.2.20.2.1.1.5 Information Transfer 103
2.2.20.2.2 Downlink Message Cancellation 103
2.2.20.2.3 Multisite Downlink ELM Protocol 103
2.2.20.2.3.1 Multisite Comm-D Reservation 103
2.2.20.2.3.2 Multisite Directed Comm-D Transmissions 104
2.2.20.2.3.3 Multisite Comm-D Delivery 105
2.2.20.2.3.4 Multisite Comm-D Closeout 105
2.2.20.2.3.5 Automatic Comm-D Closeout 105
2.2.20.2.3.6 Significance of PC Command 105
2.2.20.2.4 Downlink Interface – Data Rate 105
2.2.21 Level 5 Transponder – Enhanced Protocols 106
2.2.21.1 Enhanced Air-Initiated Comm-B Protocol 106
2.2.21.1.1 General 106
2.2.21.1.2 Enhanced Multisite Air-Initiated Comm-B Protocol 106
2.2.21.1.2.1 Initiation 106
2.2.21.1.2.2 Announcement and Extraction 106
2.2.21.1.2.3 Closeout 107
2.2.21.1.2.4 Announcement of the Next Message Waiting 107
2.2.21.1.3 Enhanced Multisite Directed Comm-B Protocol 107
2.2.21.1.3.1 Initiation 107
2.2.21.1.3.2 Announcement 107
2.2.21.1.3.3 Closeout 108
2.2.21.1.3.4 Announcement of the Next Message Waiting 108
2.2.21.1.4 Enhanced Broadcast Comm-B Protocol 108
2.2.21.2 Enhanced Uplink ELM Protocol 108
2.2.21.2.1 General 108
2.2.21.2.2 Reservation Processing 109
2.2.21.2.3 Enhanced Uplink ELM Delivery and Closeout 109

2.2.21.3 Enhanced Downlink ELM Protocol 109
2.2.21.3.1 General 110
2.2.21.3.2 Enhanced Multisite Downlink ELM Protocol 110
2.2.21.3.2.1 Initiation 110
2.2.21.3.2.2 Announcement and Extraction 110
2.2.21.3.2.3 Closeout 110
2.2.21.3.2.4 Announcement of the Next Message Waiting 110
2.2.21.3.3 Enhanced Multisite Directed Downlink ELM Protocol 111
2.2.21.3.3.1 Initiation 111
2.2.21.3.3.2 Announcement 111
2.2.21.3.3.3 Delivery 111
2.2.21.3.3.4 Closeout 111
2.2.21.3.3.5 Announcement of the Next Message Waiting 111
2.2.21.3.4 Enhanced Non-selective Downlink ELM Protocol 111
2.2.22 TCAS-Compatible Mode S Transponder 112
2.2.22.1 Message Fields and Protocols 113
2.2.22.1.1 MA Message, Comm-A Used by TCAS 113
2.2.22.1.2 MB Message, Comm-B Used by TCAS 113
2.2.22.1.2.1 Air-Initiated Downlink of RA Report 113
2.2.22.1.2.1.1 Air-Initiated Downlink of RA Report for All Transponder/TCAS Systems 113
2.2.22.1.2.1.2 Air-Initiated Downlink of RA Report for FAA TSO-C119A Compatible Systems 114
2.2.22.1.2.1.3 Air-Initiated Downlink of RA Report for RTCA/DO-185A Compatible Systems 114
2.2.22.1.2.2 Data Link Capability Codes in MB 116
2.2.22.1.2.2.1 Data Link Capability Codes in MB for All Transponder/TCAS Systems 116
2.2.22.1.2.2.2 Data Link Capability Codes in MB for FAA TSO-C119A Compatible Systems 116
2.2.22.1.2.2.3 Data Link Capability Codes in MB for RTCA/DO-185A Compatible Systems 117
2.2.22.1.2.3 Additional MB Message Reserved for RTCA/DO-185A Compatible Systems 117
2.2.22.1.3 MU Message, Comm-U Used by TCAS 118
2.2.22.1.4 MV Message, Comm-V Used by TCAS 118
2.2.22.1.4.1 MV Message, Comm-V Used by FAA TSO-C119A Compatible Systems ... 118
2.2.22.1.4.2 MV Message, Comm-V Used by RTCA/DO-185A Compatible Systems 119
2.2.22.1.5 RI Air-to-Air Reply Information 119
2.2.22.2 General Requirements of the Mode S Interface to the TCAS Equipment 120
2.2.22.2.1 Delivery of Messages 120
2.2.22.2.2 Data Integrity 120
2.2.22.2.3 TCAS Failure Data Handling 121
2.2.22.2.4 Communication Timing 121
2.2.22.3 Data Provided by TCAS Equipment to the Mode S Transponder 121
2.2.22.3.1 Data Contained in the Special Surveillance Replies (DF=0, 16) 121
2.2.22.3.2 Data Contained in the Long Special Surveillance Reply (DF=16) 121
2.2.22.3.3 Data Contained in Altitude and Identity Surveillance and Comm-B Replies (DF=4, 5, 20, 21) 122
2.2.22.3.4 Data Contained in the Altitude and Identity Comm-B Reply (DF=20, 21) 122
2.2.22.4 Data Provided by the Mode S Transponder to the TCAS Equipment 122
2.2.22.5 TCAS-Compatible Transponder Automatic Performance Monitoring 122
2.2.23 Extended Squitter (ES) 123
2.2.23.1 ADS-B Extended Squitter 123
2.2.23.1.1 Extended Squitter Format 123

2.2.23.1.2 Extended Squitter Types 123
2.2.23.1.3 Extended Squitter Rate 124
2.2.23.1.4 Transponder Support for Extended Squitter Registers 126
2.2.23.1.4.1 Data Insertion 126
2.2.23.1.4.2 Register Timeout 126
2.2.23.1.5 Airborne/Surface Format Selection 127
2.2.23.1.5.1 Automatic Format Selection 127
2.2.23.1.5.2 Ground Controlled Format Selection 127
2.2.23.1.6 Surface Squitter Rate Control 127
2.2.23.1.7 Subfields in SD for Extended Squitter 128
2.2.23.1.8 Subfields in ME for Extended Squitter 129
2.2.23.1.9 Subfields in MB for Extended Squitter 130
2.2.23.2 Event-Driven Squitter 130
2.2.23.3 Extended Squitter/Non Transponder Devices 131
2.2.23.3.1 ES/NT Format 131
2.2.23.3.2 ES/NT Squitter Types 131
2.2.23.3.3 ES/NT Squitter Rate 132
2.2.23.3.4 Delayed Transmission 132
2.2.23.3.5 ES/NT Antenna Selection 132
2.2.23.3.6 Register Timeout 132
2.2.23.3.7 Airborne/Surface State Determination 132
2.2.23.3.8 Surface Squitter Rate Control 133
2.2.23.3.9 ES/NT RF Signals 133
2.2.23.4 Extended Squitter Military Application 133
2.2.23.4.1 Military Format 133
2.2.23.5 Extended Squitter Maximum Transmission Rate 133
2.2.24 Elementary Surveillance (ELS) Compliant Transponder 133
2.2.25 Enhanced Surveillance (EHS) Compliant Transponder 133

2.3 Equipment Performance – Environmental Conditions 134
2.3.1 Environmental Test Conditions 134
2.3.2 Detailed Environmental Test Procedures 137
2.3.2.1 Receiver Characteristics (§2.2.2) 138
2.3.2.2 Transmitter Characteristics (§2.2.3) 138
2.3.2.2.1 Reply Transmission Frequency (§2.2.3.1) 138
2.3.2.2.2 RF Peak Power Output (§2.2.3.2) 139
2.3.2.2.3 Reply Rate Capability 139
2.3.2.3 Reply Pulse Characteristics (§2.2.4) 140
2.3.2.3.1 ATCRBS Reply Pulse Characteristics (§2.2.4.1) 140
2.3.2.3.2 Mode S Replies (§2.2.4.2) 141
2.3.2.4 Side Lobe Suppression (§2.2.5) 141
2.3.2.5 Pulse Decoder Characteristics (§2.2.6) 142
2.3.2.6 Transponder Recovery and Desensitization (§2.2.7) 143
2.3.2.7 Standard Interference Pulse (§2.2.8.2) and Mode S SLS (§2.2.5.2) 144
2.3.2.8 Undesired Replies (§2.2.9) 144
2.3.2.9 Self-Test and Monitors (§2.2.10) 145
2.3.2.10 Diversity Operation (§2.2.12) 145
2.3.2.11 Data Handling and Interfaces (§2.2.13) 147
2.3.2.11.1 Fixed Direct Data (§2.2.13.1.1) 147
2.3.2.11.2 Variable Direct Data (§2.2.13.1.2) 147
2.3.2.11.3 Standard Transaction Interfaces (§2.2.13.3) 149
2.3.2.11.4 ELM Service Interfaces (§2.2.13.4) 149
2.3.2.11.5 Interface Integrity Tests (§2.2.13.2.2) 150
2.3.2.12 Restoration of Power (§2.2.16) 150

2.4 Equipment Test Procedures 150
2.4.1 Definitions of Terms and Conditions of Test 150
2.4.2 Detailed Test Procedures 154
2.4.2.1 Receiver Characteristics (§2.2.2) 154
2.4.2.2 Transmitter Characteristics (§2.2.3) 156
2.4.2.2.1 Reply Transmission Frequency (§2.2.3.1) 156
2.4.2.2.2 RF Peak Power Output (§2.2.3.2) 156
2.4.2.2.3 Unwanted Power Output (§2.2.3.3 and §2.2.22.f) 157
2.4.2.2.4 Reply Rate Capability 158
2.4.2.2.5 ATCRBS Reply Rate Limiting (§2.2.7.3.1) 159
2.4.2.3 Reply Pulse Characteristics 160
2.4.2.3.1 ATCRBS Reply Pulse Characteristics (§2.2.4.1) 160
2.4.2.3.2 ATCRBS Reply Delay and Jitter (§2.2.4.1.6) 161
2.4.2.3.3 Mode S Replies (§2.2.4.2) 161
2.4.2.3.4 Frequency Spectrum of Mode S Replies (§2.2.4.2.3.d) 163
2.4.2.4 Side Lobe Suppression (§2.2.5 and §2.2.8.5) 163
2.4.2.5 Pulse Decoder Characteristics (§2.2.6) 164
2.4.2.6 Transponder Desensitization and Recovery (§2.2.7) 167
2.4.2.7 Response to Interference (§2.2.8) 168
2.4.2.8 Undesired Replies (§2.2.9) 170
2.4.2.9 Self-Test and Monitors (§2.2.10) 170
2.4.2.9.1 Squitter Monitor (§2.2.10.2) 171
2.4.2.9.2 Failure Annunciator (§2.2.10.4) 171
2.4.2.10 Interference Suppression Pulse Response (§2.2.11) 171
2.4.2.11 Diversity Operation (§2.2.12 and §2.2.22.d) 172
2.4.2.12 Data Handling and Interfaces (§2.2.13) 174
2.4.2.12.1 Fixed Direct Data (§2.2.13.1.1) 174
2.4.2.12.2 Variable Direct Data (§2.2.13.1.2) 176
2.4.2.12.3 Standard Transaction Interfaces (§2.2.13.3) 177
2.4.2.12.4 ELM Service Interfaces (§2.2.20.1.4 and §2.2.20.1.2) 178
2.4.2.12.5 Interface Integrity Testing (§2.2.13.2.2) 179
2.4.2.12.6 Comm-B Downlink Interface, Message Cancellation (§2.2.20.2.2) 179
2.4.2.12.7 Downlink ELM Interface, Message Cancellation (§2.2.20.2.2) 180

2.5 Test Procedures for the Surveillance and Communications Protocols 180
2.5.1 Introduction 180
2.5.2 Required Test Equipment 182
2.5.2.1 Automatic Test Controller 182
2.5.2.2 Signal Generator 182
2.5.2.3 Reply Receiver 183
2.5.2.4 Interface Adapter 183
2.5.3 Selection and Use of the Test Procedures 184
2.5.4 Test Procedures 185
2.5.4.1 Procedure #1 Error Protection 185
2.5.4.2 Procedure #2 Interrogation Acceptance Test 186
2.5.4.3 Procedure #3 CA Verification 187
2.5.4.4 Procedure #4 Non-Selective Lockout Tests 187
2.5.4.4.1 Positive Tests 188
2.5.4.4.2 Required Negative Tests 189
2.5.4.5 Procedure #5 Selective Lockout Tests 190
2.5.4.6 Procedure #6 Squitter Verification 193
2.5.4.6.1 Acquisition Squitter Verification 193
2.5.4.6.2 Extended Squitter Verification 194
2.5.4.6.2.1 Extended Squitter Rate Verification 194

2.5.4.6.2.2 Extended Squitter Protocol Verification 194
2.5.4.6.3 Squitter Control Verification 198
2.5.4.7 Procedure #7 FS and VS Protocol/Code Tests 202
2.5.4.8 Procedure #8 PI (Parity/Identity) Verification 205
2.5.4.9 Procedure #9 Address Tests 205
2.5.4.10 Procedure #10 Altitude Report Tests 206
2.5.4.11 Procedure #11 4096 Code Tests 208
2.5.4.12 Procedure #12 RI, Acquisition and Maximum Airspeed 210
2.5.4.13 Procedure #13 PR, Probability of Reply, Stochastic Acquisition 211
2.5.4.14 Procedure #14 MU for the Basic-Option Transponder 213
2.5.4.15 Procedure #15 Comm-A, Interface and Information Content 213
2.5.4.16 Procedure #16 Broadcast Formats 215
2.5.4.17 Procedure #17 Downlink Interface, DFs 0, 16 215
2.5.4.18 Procedure #18 Comm-B Protocol 217
2.5.4.19 Procedure #19 AIS Flight Identification, Protocol and Interface 222
2.5.4.20 Procedure #20 Extended Capability Report 222
2.5.4.21 Procedure #21 Directed Comm-B 223
2.5.4.22 Procedure #22 Downlink Interface, Storage Design, Buffer Rate 225
2.5.4.23 Procedure #23 Downlink Interface, No-Storage Design 227
2.5.4.24 Procedure #24 Comm-C Protocol 227
2.5.4.25 Procedure #25 Uplink Interface, ELM-C 231
2.5.4.26 Procedure #26 Comm-D Protocol 232
2.5.4.27 Procedure #27 Directed Comm-D 235
2.5.4.28 Procedure #28 Comm-D Interface, Rate and Content 236
2.5.4.29 Not Used 236
2.5.4.30 Procedure #30 Sensitivity Level Operation (§2.2.22.1.1 and §2.2.22.1.5) 236
2.5.4.31 Procedure #31 Transmission of RA Report to Mode S Sensor (§2.2.22.h and §2.2.22.1.2.1) 237
2.5.4.31.1 Procedure #31 Transmission of RA Report for a Transponder Operating with an FAA TSO-C119A Compatible TCAS (§2.2.22.h, §2.2.22.1.2.1, §2.2.22.1.2.1.1, and §2.2.22.1.2.1.2) 238
2.5.4.31.2 Procedure #31 Transmission of RA Report for a Transponder Operating with an RTCA/DO-185A Compatible TCAS (§2.2.22.h, §2.2.22.1.2.1, §2.2.22.1.2.1.1, and §2.2.22.1.2.1.3) 240
2.5.4.32 Procedure #32 Transmission of TCAS Capability Information to a Mode S Sensor (§2.2.22.h and §2.2.22.1.2.2) and to other TCAS Aircraft (§2.2.22.1.5) 242
2.5.4.32.1 Procedure #32 Transmission of TCAS Capability Information to a Mode S Sensor (§2.2.22.h, §2.2.22.1.2.2, §2.2.22.1.2.2.1, and §2.2.22.1.2.2.2) and to other TCAS Aircraft (§2.2.22.1.5) for a Transponder Operating with an FAA TSO-C119A Compatible TCAS 242
2.5.4.32.2 Procedure #32 Transmission of TCAS Capability Information to a Mode S Sensor (§2.2.22.h, §2.2.22.1.2.2, §2.2.22.1.2.2.1, and §2.2.22.1.2.2.3) and to other TCAS Aircraft (§2.2.22.1.5) for a Transponder Operating with an RTCA/DO-185A Compatible TCAS 243
2.5.4.33 Procedure #33 TCAS or transponder/TCAS Interface Failure During Transmission of RA Report and Data Link Capability Report to a Mode S Sensor (§2.2.22.1.2.1.3 and §2.2.22.1.2.2.3) 244
2.5.4.34 Procedure #34 Coordination (§2.2.22.1.3 and §2.2.22.1.4) 245
2.5.4.34.1 Procedure #34 Coordination (§2.2.22.1.3 and §2.2.22.1.4.1) for a Transponder Operating with an FAA TSO-C119A Compatible TCAS 245
2.5.4.34.2 Procedure #34 Coordination (§2.2.22.1.3 and §2.2.22.1.4.2) for a Transponder Operating with an RTCA/DO-185A Compatible TCAS 246
2.5.4.35 Procedure #35 MU Messages To TCAS (§2.2.22.1.3) 247

2.5.4.36 Procedure #36 Transponder Replies to Incoming TCAS Resolution Messages (§2.2.22.2.1) 248
2.5.4.37 Procedure #37 Transponder/TCAS Throughput (§2.2.22 b and g) 249
2.5.4.38 Procedure #38 Transponder Communication Timing (§2.2.22.2.4) 250
2.5.4.39 Procedure #39 TCAS Crosslink (§2.2.14.4.13, §2.2.14.4.7, and §2.2.18.2.10) 250

3 INSTALLED EQUIPMENT PERFORMANCE 251

3.1 Equipment Installation 251
3.1.1 Equipment Accessibility 251
3.1.2 Inadvertent Turn Off 251
3.1.3 Displays 251
3.1.4 Aircraft Power Source 251
3.1.5 Transmission Line(s) 251
3.1.6 Antenna Location 251
3.1.7 Mutual Suppression 252

3.2 Conditions of Test 252
3.2.1 Power Input 252
3.2.2 Interference Effects 252
3.2.3 Environment 253
3.2.4 Adjustment of Equipment 253
3.2.5 Warm-up Period 253
3.2.6 Radiation Pattern 253

3.3 Test Procedures for Installed Equipment Performance 253
3.3.1 Conformity Inspection 253
3.3.2 Bench Tests 254
3.3.3 Reply Frequency 254
3.3.4 Framing Pulse Spacing 254
3.3.5 Reply Codes 254
3.3.6 Pressure Altitude Transmissions 255
3.3.7 Altitude Reporting Test 255
3.3.8 Reply Pulse Width 255
3.3.9 Receiver Sensitivity 255
3.3.10 Transmitter Power Output 255
3.3.11 Mode S Address 256
3.3.12 Received Reply 256
3.3.13 Airspeed Fixed Field 256
3.3.14 On-the-Ground Condition 256
3.3.15 Diversity Antenna Installations 256

3.4 Flight Test Procedures 256

MEMBERSHIP 251

List of Figures

Figure 2-1: General Pulse Patterns for PAM Interrogations 16
Figure 2-2: General Pulse Pattern for DPSK Interogations 16
Figure 2-3: Mode S Reply Waveform 24
Figure 2-4: Overview of Mode-S Interrogation Formats 44
Figure 2-5: Overview of Mode S Reply Formats 45
Figure 2-6: Field Index 48
Figure 2-7: Level 1 Transponder: Uplink Formats 61
Figure 2-8: Level 1 Transponder: Downlink Formats 61
Figure 2-9: Functional Diagram of Uplink Coding 64
Figure 2-10: Functional Diagram of Downlink Coding 65
Figure 2-11: The Level 1 Transponder: Interrogation Acceptance 65
Figure 2-12: All Transponders: Lockout Initiation 68
Figure 2-15: All Data Link Transponders: Formats 76
Figure 2-16: Data Link Transponders: Interrogation Acceptance 76
Figure 2-17: All Data Link Transponders: Coordination 79
Figure 2-13: All Transponders: FS and VS Protocol 80
Figure 2-14: All Transponders: Reply Content 81
Figure 2-18: All Data Link Transponders: UM Protocol 82
Figure 2-19: All Data Link Transponders: B-Protocol 83
Figure 2-20: Comm-C Reservation and Closeout 98
Figure 2-21: Comm-C Message Handling 98
Figure 2-22: Comm-D Reservation and Closeout 101
Figure 2-23: Comm-D Message Handling 102
Figure 2-26: 139
Figure 2-27: 141
Figure 2-28: not referenced anywhere 142
Figure 2-24: 154
Figure 2-25: 156
Figure 2-32: 157
Figure 2-29: 159
Figure 2-30: 171
Figure 2-31: 172

List of Tables

Table 2.2.16-1: Acquisition Squitter Transmission Requirements 70
Table 2.3.1.1: Environmental Test Groups ..... **Error! Bookmark not defined.**
Table 2.3.1.2: Performance Test Requirements During Environmental Tests ..... **Error! Bookmark not defined.**

1 PURPOSE AND SCOPE

1.1 Introduction

This document sets forth minimum operational performance standards for Mode Select (Mode S)[1] airborne equipment. Incorporated within these standards are system characteristics that will be useful to users of the system as well as designers, manufacturers and installers.

Compliance with these standards is recommended as a means of assuring that the equipment will perform its intended function(s) satisfactorily under all conditions normally encountered in routine operations.

It is recognized that any regulatory application of these standards is the responsibility of appropriate government agencies.

Because the measured values of equipment performance characteristics may be a function of the measurement method, standard test conditions and methods of test are recommended in this document.

This document considers an equipment configuration consisting of: transponder, control panel, antenna and interconnecting cables. It should not be inferred that all Mode S airborne equipment will necessarily include all of the foregoing components as separate units; this will depend on the design configuration chosen by the manufacturer. Additional functions and components that may refer to expanded equipment capabilities are identified as additional capabilities. Equipment features that are beyond the scope of this document may be developed in future RTCA activities.

If the equipment implementation includes a computer software package, the guidelines contained in the most current issue of RTCA/DO-178, *Software Considerations in Airborne Systems and Equipment Certification*, should be considered. If the equipment implementation includes design considerations for use in conjunction with TCAS functionality, the guidelines contained in the most current issue of RTCA/DO-185, *Minimum Operational Performance Standards for Traffic Alert and Collision Avoidance System (TCAS) Airborne Equipment*, should be considered.

1.2 System Overview

1.2.1 The Function of Mode S

Mode S is a cooperative surveillance and communication system for air traffic control. It employs ground-based and airborne sensors (interrogators) and airborne transponders. Ground-air-ground data link communications can be accommodated integrally with the surveillance interrogations and replies. Mode S has been designed as an evolutionary addition to the Air Traffic Control Radar Beacon System (ATCRBS) to provide the enhanced surveillance and communication capability required for air traffic control automation. To facilitate the introduction of Mode S into the ATCRBS system, both

[1] For the purpose of this document, the term "Mode S" implies a combined ATCRBS/Mode S capability.

DRAFT © 2007 RTCA, Inc.

ground and airborne Mode S installations include full ATCRBS capability. Mode S interrogators provide surveillance of ATCRBS-equipped aircraft, and Mode S transponders will reply to ATCRBS interrogators. In addition, the data link potential of Mode S permits use of the transponder for a number of air traffic control (ATC) and aircraft separation assurance (ASA) functions.

The monopulse techniques used in Mode S surveillance allow improved position determination of ATCRBS targets while reducing the number of required interrogations. This reduction of ATCRBS interrogations and replies improves the radio frequency (RF) interference environment.

A principal feature of Mode S that differs from ATCRBS is that each aircraft is assigned a unique address code. Using this unique code, interrogations can be directed to a particular aircraft and replies unambiguously identified. Channel interference is minimized because a sensor can limit its interrogations to targets of interest. In addition, by proper timing of interrogations, replies from closely-spaced aircraft can be received without mutual interference. The unique address in each interrogation and reply also permits the inclusion of data link messages to or from a particular aircraft.

1.2.2 Major Operating Characteristics

In order to facilitate a smooth transition from the existing ATCRBS system, Mode S uses the same frequencies for interrogations and replies as ATCRBS (1030 and 1090 MHz, respectively). The Mode S waveforms (modulation techniques) have been chosen to reduce the interference between ATCRBS and Mode S. The Mode S interrogation is transmitted using binary differential phase shift keying (DPSK). With proper demodulation, the information content is detectable in the presence of overlaid ATCRBS signals. The modulation of the downlink transmission from the transponder is pulse position modulation (PPM) which is inherently resistant to ATCRBS random pulses. The information content of both uplink and downlink transmissions is further protected by parity check bits generated by a cyclic coding algorithm.

Each Mode S interrogation contains a 24-bit discrete address which allows a very large number of aircraft to operate in the air traffic control environment without occurrence of a redundant address. The overlaying of the parity check bits on the discrete address assures that a message will be accepted only by the aircraft addressed and that the probability of an erroneous message being accepted is extremely small.

Because the interference resistance of the Mode S system relies on the DPSK modulation process on the uplink and the PPM format on the downlink, the DPSK demodulation processor within the transponder must be designed carefully, and precise timing of the downlink pulses is required.

1.2.3 System Performance

1.2.3.1 Surveillance Performance

The Mode S interrogator provides surveillance of all beacon-equipped aircraft (both ATCRBS and Mode S) within its line-of-sight coverage. The nominal maximum range is 200 NM. The Mode S interrogators can provide surveillance of a large number of aircraft

DRAFT © 2007 RTCA, Inc.

with better accuracy than ATCRBS. With the capability to reinterrogate a target within an antenna scan, the overall surveillance reliability of Mode S is greater than 99 percent.

1.2.3.2 Data Link Performance

Mode S can provide for ground-to-air, air-to-ground and air-to-air data link. The critical nature of many of the messages carried by Mode S will require a high degree of message integrity. Error-detecting codes in both interrogations and replies are designed to produce an undetected error rate of better than one in 10^7. By requiring technical acknowledgment of a correct message receipt, along with the sensor's capability to re-interrogate, if necessary, a message delivery reliability of greater than 99 percent in one antenna scan is achieved. The Mode S data link capacity exceeds the maximum data load expected to exist in the foreseeable future.

1.2.4 Basic System Protocol

As an aircraft equipped with a transponder enters the airspace served by a Mode S interrogator, it receives an ATCRBS/Mode S All-Call interrogation which has a waveform that can be understood by both ATCRBS and Mode S transponders. ATCRBS transponders reply with a standard ATCRBS reply format, while Mode S transponders reply with a Mode S format that includes their discrete (24-bit) Mode S address. This address, together with location of the Mode S aircraft, is entered into a file (put on roll-call), and on the next scan the Mode S-equipped aircraft is discretely addressed. Since azimuth and range are known for all aircraft on roll-call, they are interrogated according to a precomputed schedule. Within this schedule are ATCRBS/Mode S All-Calls which permit the tracking of known ATCRBS aircraft and the acquisition of additional ATCRBS and Mode S aircraft entering the served airspace.

The discrete interrogations of a Mode S-equipped aircraft contain a command field that may lock out the Mode S transponder to further ATCRBS/Mode S All-Call interrogations (Mode S lockout). ATCRBS interrogations originating from ATCRBS interrogators are not affected by this lockout; Mode S transponders reply to ATCRBS interrogations under all circumstances. As a Mode S aircraft flies into airspace served by another Mode S interrogator, the first Mode S interrogator may pass position information and the aircraft's discrete address *via* ground lines to the interrogator now providing service. Thus, the need to unlock the Mode S transponder may be eliminated, and the second interrogator immediately schedules discrete roll-call interrogations for the aircraft. In regions where Mode S interrogators are not connected *via* ground lines, a protocol exists that permits the Mode S transponder to be in a lockout state for only those interrogators which have the aircraft on roll-call. Therefore, as the aircraft flies into airspace served by a new Mode S interrogator, the new interrogator may acquire the aircraft *via* its reply to an All-Call interrogation. The Mode S-Only All-Call is used by interrogators if Mode S targets are to be acquired without eliciting replies from ATCRBS targets that may be present.

The destination address of this interrogation consists of all ONEs. All Mode S transponders will reply to this interrogation giving their discrete address. In turn, an ATCRBS-Only All-Call is used by the interrogator if ATCRBS targets are to be acquired without eliciting replies from Mode S targets.

Aircraft are tracked by the interrogator throughout its assigned airspace. A Mode S aircraft reports in its replies either its altitude or its ATCRBS 4096 code depending on the

DRAFT © 2007 RTCA, Inc.

type of discrete interrogation received. During each scan, interrogations of ATCRBS aircraft are made in both Mode A and Mode C.

If, on scanning through a Mode S-equipped aircraft's location, the interrogator does not receive a valid reply, it can re-interrogate a limited number of times. Interrogators normally interrogate at low power and re-interrogate at high power when the low power attempt fails.

Several ATCRBS/Mode S All-Call interrogations are transmitted during the time each ATCRBS target is in the beam. Thus both ATCRBS and Mode S aircraft are served when flying through the system with a minimum of RF channel loading.

1.2.5 Mode S Message Content

1.2.5.1 Address/Parity

All discrete Mode S interrogations (56-bit or 112-bit) and replies (except the All-Call reply) contain the 24-bit discrete address of the Mode S transponder upon which 24 error-detecting parity check bits are overlaid. In the All-Call reply, the 24 parity check bits are overlaid on the Mode S interrogator's address, and the transponder's discrete address is included in the clear in the text of the reply.

1.2.5.2 Surveillance

The primary function of Mode S is surveillance. For the Mode S transponder, this function can be accomplished by use of “short” (56-bit) transmissions in both directions. In these transmissions, the aircraft reports its altitude or ATCRBS 4096 code as well as its flight status (airborne, on the ground, alert, Special Position Identification [SPI], etc.).

There are two types of squitter transmissions, i.e., transmissions spontaneously generated by the transponder. The short (56-bit) squitter has the format of an All-Call reply (DF=11) and is transmitted by a transponder approximately once every second. This squitter is received and used by aircraft equipped with TCAS to detect the presence and 24-bit address of Mode S equipped aircraft within signal range. The extended (112-bit) squitter (DF=17) contains the same fields as the short squitter, plus a 56-bit message field that is used to broadcast Automatic Dependent Surveillance (ADS) data approximately four times per second. The Extended Squitter is used by TCAS or other air-air applications, and ground ATC users for passive air and surface surveillance.

“Special surveillance” interrogations from airborne collision avoidance systems are addressed to Mode S-equipped aircraft based upon the address extracted from squitter signals. These interrogations are used for Mode S target tracking and collision threat assessment.

1.2.5.3 Data Link Communications

The discrete addressing and digital encoding of Mode S transmissions permit their use as a digital data link. The interrogation and reply formats of the Mode S system contain sufficient coding space to permit the transmission of data. Such data transmissions may be used for air traffic control purposes, air-to-air data interchange for collision avoidance,

DRAFT © 2007 RTCA, Inc.

or may be used to provide flight advisory services such as weather reports, Automated Terminal Information System (ATIS), etc.

Most Mode S data link transmissions will be handled as one 56-bit message included as part of "long" (112-bit) interrogations or replies. These transmissions include the message in addition to surveillance data and thus will generally be used in place of, rather than in addition to, a surveillance interrogation and/or reply.

An efficient transmission of longer messages is accomplished by the extended length message (ELM) capability. Using this capability, a sequence of up to 16 80-bit message segments (each within a 112-bit transmission) can be transmitted, either ground-to-air or air-to-ground and can be acknowledged with a single reply/interrogation. ELMs do not contain surveillance data and thus cannot substitute for a surveillance interrogation-reply cycle.

1.3 Operational Goals

Mode S is a combined secondary surveillance radar and a potential ground-air-ground data link system capable of providing aircraft surveillance and communications necessary to support automated ATC in the dense traffic environments expected in the future. It is capable of common-channel interoperation with the ATC beacon system and thus may be implemented over an extended ATCRBS-to-Mode S transition period. In supporting ATC automation, Mode S is capable of providing the reliable communications necessary for data link services.

1.4 Operational Applications

1.4.1 The ATCRBS Environment

A great majority of the combined civil and military aircraft fleets are equipped with ATCRBS transponders. In terms of exposure to the ATC system, this implementation is estimated to be greater than 90 percent of the hours flown.

Because of operating requirements, approximately one half of transponder-equipped civil aircraft have altitude reporting (Mode C) capability.

Requirements for operation in high altitude airspace and in specific high density terminal control areas have caused an increase in the number of aircraft equipped with Mode C.

1.4.2 The Mode S Environment

Mode S offers more options for the aircraft operator than ATCRBS. Different levels of service may be available to satisfy varying user requirements.

1.4.3 Mode S Transponder Levels

Mode S transponders provide for both ground-to-air and air-to-air surveillance.

DRAFT © 2007 RTCA, Inc.

The data link function of Mode S transponders provides for information transfer in both directions between ground and air and between airborne units. Data link implementation varies and depends on the amount of information to be exchanged.

Possible implementation configurations and additional transponder features are summarized in the following paragraphs.

1.4.3.1 Level 1 Transponders

The Level 1 Transponder supports the surveillance functions of both ATCRBS and Mode S ground sensors and the surveillance functions of airborne interrogators. This transponder can also reply to an airborne interrogator thereby making its presence known; to do this, it need only handle short interrogations and replies.

Level 1 Transponders **shall** have the capabilities presecribed for:

a. Mode A identity and Mode C pressure-altitude reporting,
b. ATCRBS/Mode-S and Mode S all-call transactions,
c. Addressed surveillance altitude and identity transaction,
d. Lockout protocols,
e. Basic data protocols except data link capability reporting, and
f. Air-to-air service and squitter transactions.

Note: *Level 1 permits SSR surveillance based on pressure-altitude reporting and the Mode A identity code. In an SSR Mode S environment, technical performance relative to a Mode A/C transponder is improved because of Mode S selective aircraft interrogation.*

1.4.3.2 Level 2 Transponders

The Level 2 Transponder supports all of the surveillance functions. It also supports:

a. bidirectional air-to-air information exchange
b. ground-to-air data uplink, Comm-A
c. air-to-ground data downlink, Comm-B
d. multisite message protocol
e. data link capability reporting
f. aircraft identification reporting
g. TCAS/ACAS crosslink capability

Level 2 Transponders support receipt and processing of long interrogations and the generation of long replies. The ground-air-ground data link capability comprises a multitude of services and can be implemented according to the number and kind of services available, depending on the mission requirements of the aircraft. Protocols provide a means of reporting to the ground the specifics of each individual installation.

Level 2 transponders will have the following additional capabilities as defined by their subclass designation. The subclasses will provide the following transponder capabilities:

a. Ground-Initiated Comm-B (GICB) transponders will have the capabilities of §1.4.3.1 and those identified for Level 2B.

DRAFT © 2007 RTCA, Inc.

b. Level 2A data link transponders will have the capabilities of §1.4.3.1 and §2.2.19.

1.4.3.3 Level 3 Transponders (Uplink ELM Capability)

In addition to the capabilities of the Level 1 and Level 2 Transponders, the Level 3 transponder is able to receive ELMs from the ground. ELMs are received in the Comm-C format and consist of a burst of uplink transmissions that need not be replied to individually but are acknowledged in a reply containing a summary of the received interrogations.

Level 3 Transponders **shall** have the capabilities of §1.4.3.2 and also those prescribed for ground-to-air extended length message (ELM) communications.

Note: *Level 3 permits extended length data link communications from ground-to-air and thus may provide retrieval from ground-based data banks and receipt of other air traffic services which are not available with Level 2 transponders.*

1.4.3.4 Level 4 Transponders (Full ELM Capability)

In addition to all the capabilities of a Level 3 Transponder, the Level 4 Transponder can generate ELMs for transmittal to the ground by using the Comm-D format.

Level 4 transponders **shall** have the capabilities of §1.4.3.3 and also those prescribed for air-to-ground extended length message (ELM) communications.

Note: *Level 4 permits extended length data link communications from air to ground and thus may provide access from the ground to airborne data sources and the transmission of other data required by air traffic services which are not available with Level 2 transponders.*

1.4.3.5 Level 5 Transponders (Enhanced Data Link Protocol Capability)

In addition to the full ELM capability, the Level 5 Transponder can support the enhanced data link protocols. The protocols provide for increased data link capacity by permitting data link transactions with more than one Mode S interrogator at a time without the need for multisite coordination. These protocols are fully conformant to the data link transponder protocols description of §2.2.19.1 to §2.2.20.2.1 (the standard protocols) and are therefore compatible with interrogators that are not equipped for the enhanced protocol.

Level 5 transponders **shall** have the capabilities of §1.4.3.4 and also those prescribed for enhanced Comm-B and extended length message (ELM) communications.

Note: *Level 5 permits Comm-B and extended length data link communications with multiple interrogators without requiring the use of multisite reservations. The Level 5 Transponder has a higher minimum data link capacity than the other transponder levels.*

DRAFT © 2007 RTCA, Inc.

1.4.3.6 Additional Features

Some transponder installations will require additional features:

- Installations in large aircraft or co-installation with airborne collision avoidance systems may require the transponder to operate in the diversity mode, i.e., the use of two antennas, receivers and transmitting channels.

- Co-installation with TCAS II systems requires capability for long air-to-air formats.

- Co-installation with other L-band equipment may require an on-board mutual suppression system.

- Extended squitter transponders will have the capabilities of §1.4.3.2, §1.4.3.3, §1.4.3.4 or §1.4.3.5 and also those prescribed for extended squitter operation (see §2.2.23).

- Transponders with the ability to process SI codes will have the capabilities of §1.4.3.2 and also those prescribed for SI code operation.

- TCAS Compatible transponders will have the capabilities of §1.4.3.2, §1.4.3.3, §1.4.3.4 or §1.4.3.5, and §2.2.22.

1.4.4 Use of the Mode S Data Link

The foregoing operational categories include Mode S applications for aircraft separation assurance services. In addition, the data link is available for other uses including:

a. flight advisory information delivered to the pilot.
b. visual confirmation of ATC instructions.
c. pilot participation in ATC through use of an advanced display.
d. future automation of ATC.

1.4.5 Airborne Equipment

The transponder is the principal avionics component of Mode S. It performs all the necessary surveillance functions by providing the appropriate reply to ATCRBS and Mode S interrogations addressed to the aircraft.

When used for data link transmissions, the transponder accepts the message as it arrives as part of an interrogation and passes it on to its destination. A message to be transmitted to the ground is accepted by the transponder at the interface and is incorporated in a reply made to an interrogation.

All Mode S transmissions, uplink as well as downlink, are protected by a 24-bit parity code. The transponder performs decoding and encoding as required, so that the surveillance function as well as the message content is protected.

By keeping most data link functions separate from the basic transponder functions, the complexity of the basic transponder has been kept at the minimum required for its

DRAFT © 2007 RTCA, Inc.

surveillance function. The additional complexity associated with the ground-to-air data link function is incurred only by users desiring that service.

Some Mode S transponders may be equipped with uplink and downlink message interfaces providing interaction with input/output (I/O) devices. Some transponders may include the devices as an integral part of their design.

1.5 Assumptions

This document defines the basic surveillance and data link characteristics of Mode S transponders. It is assumed that as applications of the Mode S data link mature, provisions necessary to support these applications will be designed and implemented within the system constraints set forth by this document.

1.6 Test Procedures

The specified test procedures and associated limits are intended as one means of demonstrating compliance with the minimum acceptable performance parameters. Although specific test procedures are cited, it is recognized that other methods may be preferred by the test organization. These alternate methods may be used if they provide at least equivalent information. In such cases, the procedures cited should be used as one criterion in evaluating the acceptability of the alternate procedures.

The order of tests suggests that the equipment be subjected to a succession of different tests as it moves from design and design qualification into operational use. For example, the equipment should have demonstrated compliance with the requirements of Section §2.0 as a precondition to satisfactory completion of the installed system tests of Section §3.0.

Three types of test procedures are included which should be used at different stages in the equipment approval cycle. These are discussed in the following paragraphs.

1.6.1 Environmental Tests

Environmental tests are specified in Subsection §2.3. The procedures and their associated limit requirements are intended to provide a means of determining the electrical and mechanical performance of the equipment under environmental conditions expected to be encountered in actual operations. Test results may be used by equipment manufacturers as design guidance in preparation of installation instructions and, in certain cases, for obtaining formal approval of equipment design and manufacture.

1.6.2 Detailed Test Procedures

Detailed test procedures for hardware qualifications in ambient conditions are specified in Subsection §2.4. The test procedures contained in Subsection §2.5 verify the transponder's surveillance and communication protocols. These tests are conducted at the equipment level and are intended to provide a laboratory means of demonstrating compliance with the requirements of Subsections §2.1 and §2.2. Test results may be used by equipment manufacturers as design guidance, for monitoring manufacturing

DRAFT © 2007 RTCA, Inc.

compliance and, in certain cases, for obtaining formal approval of equipment design and manufacture.

1.6.3 Installed System Tests

The installed system test procedures and their associated requirements are specified in Section §3.0. Although bench and environmental test procedures are not included in the installed system tests, their successful completion is a precondition to completion of the installed tests. In certain instances, however, installed system tests may be used in lieu of bench test simulation of such factors as power supply characteristics, interference from or to other equipment installed on the aircraft, etc. Installed tests are normally performed under two conditions:

a. with the aircraft on the ground and using simulated or operational system inputs, and/or

b. with the aircraft in flight using operational system signals appropriate to the equipment under test.

Test results may be used to demonstrate functional performance in the intended operational environment.

In addition, the ground test procedures may be used as an optional check of equipment performance following corrective maintenance.

1.7 Definitions of Key Acronyms and Terms

ATC – Air Traffic Control

ATCRBS – Air Traffic Control Radar Beacon System

ATIS – Automated Terminal Information System

DPSK – Differential Phase Shift Keying

ELM – Extended Length Message

Mode S – Mode Select

MTL – Miniumu Triggering Level

PAM – Pulse Amplitude Modulation

PPM – Pulse Position Modulation

SPI – Special Position Identification

TCAS/ACAS – Traffic Alert and Collision Avoidance System

Additional Acronyms and Definitions of Terms are provided in Appendix A

DRAFT © 2007 RTCA, Inc.

1.8 Mode S Specific Services

Appendix B defines the functional requirements for the Mode S Specific Services, and describes the architecture within which the Mode S Specific Services entity will operate. It does not define data link applications that will be supported by Mode S and other data links.

1.9 Dataflash

Appendix C defines the requirements and test procedures for the Dataflash application.

DRAFT © 2007 RTCA, Inc.

2 MODE S TRANSPONDER EQUIPMENT PERFORMANCE REQUIREMENTS AND TEST PROCEDURES

2.1 General Requirements for All Equipment

2.1.1 Airworthiness

The design and manufacture of the equipment **shall** provide for installation that does not impair the airworthiness of the aircraft.

2.1.2 General Performance

The equipment **shall** perform its intended function as defined by the manufacturer, and its proper use **shall** not create a hazard to users of the National Airspace System (NAS).

2.1.3 Federal Communications Commission Rules

The equipment **shall** comply with all applicable rules of the Federal Communications Commission.

2.1.4 Fire Protection

Except for small parts (such as knobs, fasteners, seals, grommets and small electrical parts) that would not contribute significantly to the propagation of a fire, all materials used **shall** be self-extinguishing.

2.1.5 Operation of Controls

The operation of controls intended for use during flight, in all possible combinations and sequences, **shall** not result in a condition detrimental to the continued performance of the equipment (see §2.1.2).

2.1.6 Accessibility of Controls

Controls that are not normally adjusted in flight **shall** not be readily accessible to flight personnel.

2.1.7 Flight Crew Control Functions

The following functions **shall** be provided.

a. Means of selecting each of the ATCRBS 4096 reply codes, and of indicating the code selected.

b. Means of selecting the condition in which the transponder is rendered incapable of generating replies to ATCRBS, ATCRBS/Mode S All Call, and Mode S-only All

DRAFT © 2007 RTCA, Inc.

Call interrogations, but continues to generate Mode S squitter transmissions and continues to reply to discretely addressed Mode S interrogations when the aircraft is on the ground. Return to normal operation from this condition **shall** be possible within five seconds. If this condition is enabled automatically when the aircraft is on the ground, a flight crew switch is not necessary. If performed manually, this condition **shall** have no effect on the transmission of Extended Squitters (see §2.2.23.1.2) or on the reporting of on-the-ground state (see §2.2.13.1.2.c, and §2.2.18.2.7.b). Transponders that simulate ATCRBS/Mode S All Call interrogations in self-test/squitter transmission may occasionally open their window of non-acceptance for this purpose coincidental with an actual interrogation, thus generating a reply to the interrogation. Such coincidental acceptance periods may be considered tolerable, but must not exceed one percent of transponder operating time.

c. Means of selecting the condition in which all transponder functions, other than transmission on the reply frequency and associated self-testing, are operational (i.e., the Standby condition). Return to normal operation from this condition **shall** be possible within five seconds.

d. Means of initiating the IDENT (SPI) feature.

e. Means of inhibiting the transmission of the altitude information, while retaining the ATCRBS framing pulses in ATCRBS Mode C replies and while transmitting all ZEROs in the altitude field of Mode S replies.

f. If the aircraft uses a flight number for aircraft identification, a means **shall** be provided for the variable aircraft identification to be inserted by the pilot.

2.1.8 Optional Crew Control Functions

On an optional basis, other functions may be provided.

2.1.9 Effects of Tests

Unless otherwise provided, the application of the specified tests **shall** produce no subsequently discernible condition detrimental to the continued performance of the equipment.

2.1.10 Equipment Configuration

It is not the intention of this performance standard to preclude manufacturers from establishing interfaces between the transponder, antenna, control panel and input/output devices and obtaining regulatory approval of these components.

Note: *For example, a transponder system with a remote control panel may have several panel configurations available to meet the needs of various aircraft types. The manufacturer is allowed to establish control panel interface standards and receive approval of the various panel designs without performing tests on the total system for each panel design.*

DRAFT © 2007 RTCA, Inc.

2.1.11 Interrogation Signals

The following paragraphs describe the signal in space as it can be expected to appear at the transponder's antenna. Because signals can be corrupted in transmission, tolerances for interrogator performance are more restrictive and should not be derived from this document. The signals in space comprise two types of interrogations distinguished by different modulation techniques: pulse amplitude modulation (PAM) and DPSK signals.

2.1.11.1 Interrogation Carrier Frequency

The carrier frequency of received interrogations is:

a. 1030 ±0.2 MHz from ATCRBS interrogators.

b. 1030 ±0.01 MHz from Mode S interrogators.

2.1.11.2 Measurement Convention

Pulse Amplitude is defined in relation to another pulse and is measured between pulse peaks.

Pulse Duration is measured between the half voltage points of the leading and trailing edges.

Pulse Rise Time is measured as the time interval between 10 percent and 90 percent of peak amplitude on the leading edge of the pulse.

Pulse Decay Time is measured as the time interval between 90 percent and 10 percent of peak amplitude on the trailing edge of the pulse.

Pulse-to-Pulse Intervals are measured between the half voltage points of their leading edges.

Phase Reversal Location is measured from the 90-degree point of the phase transition.

Phase Reversal Duration is measured between the 10 and 170-degree points of the transition.

Phase Reversal Intervals are measured between 90-degree points of the transitions.

2.1.11.3 Received PAM Signals

The following interrogations are exclusively PAM signals:

- ATCRBS Mode A
- ATCRBS Mode C
- ATCRBS Mode A/Mode S All-Call
- ATCRBS Mode C/Mode S All-Call
- ATCRBS Mode A-Only All-Call
- ATCRBS Mode C-Only All-Call

DRAFT © 2007 RTCA, Inc.

All of these interrogations use two or more of the four pulses shown in §2.1.11.3.2. The pulses are labeled P_1, P_2, P_3 and P_4.

2.1.11.3.1 Pulse Shapes

The pulse shapes for PAM interrogations are summarized below (all values are in microseconds).

Pulse Designator	Pulse Duration	Duration Tolerance	Rise Time Min/Max	Decay Time Min/Max
P_1, P_2, P_3, P_5	0.8	±0.1	0.05/0.1	0.05/0.2
P_4 (short)	0.8	±0.1	0.05/0.1	0.05/0.2
P_4 (long)	1.6	±0.1	0.05/0.1	0.05/0.2

2.1.11.3.2 Pulse Patterns

The pulse patterns of the PAM interrogations are defined as follows (all values are in microseconds).

Interrogation Type	Spacing			
	P_1 - P_2	P_1 - P_3	P_3 - P_4	P_4
ATCRBS Mode A	2 ±0.15	8 ±0.2	-	None
ATCRBS Mode C	2 ±0.15	21 ±0.2	-	None
ATCRBS Mode A/Mode S All-Call	2 ±0.15	8 ±0.2	2 ±0.05	Long
ATCRBS Mode C/Mode S All-Call	2 ±0.15	21 ±0.2	2 ±0.05	Long
ATCRBS Mode A-Only All-Call	2 ±0.15	8 ±0.2	2 ±0.05	Short
ATCRBS Mode C-Only All-Call	2 ±0.15	21 ±0.2	2 ±0.05	Short

DRAFT © 2007 RTCA, Inc.

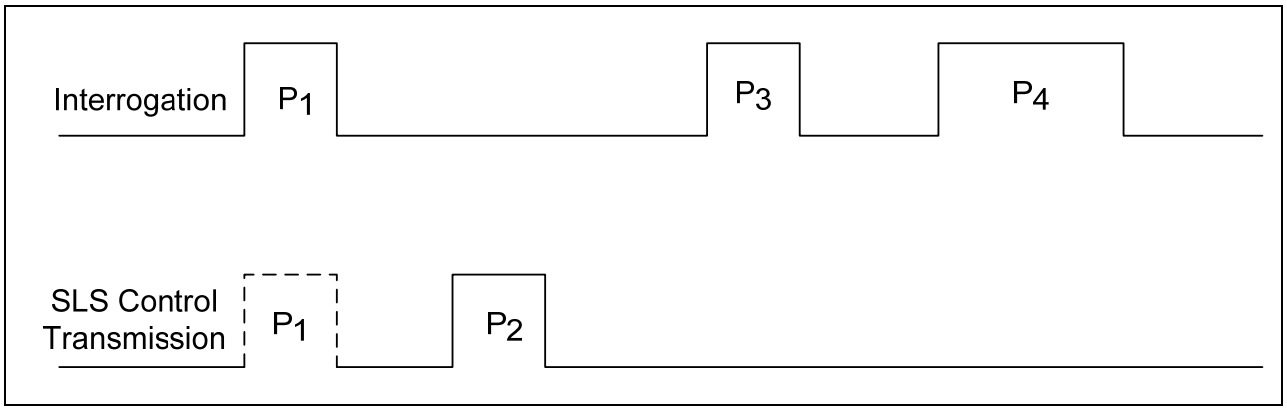

Figure 2-1: General Pulse Patterns for PAM Interrogations

2.1.11.3.3 Relative Pulse Amplitudes

P_2 amplitudes will vary from P_1.

P_3 amplitudes are P_1 ±1 dB.

P_4 amplitudes are P_3 ±1 dB.

2.1.11.4 Received DPSK Signals

All Mode S (P_6 type) interrogations are DPSK signals. They are structured as shown in Figure 2-2.

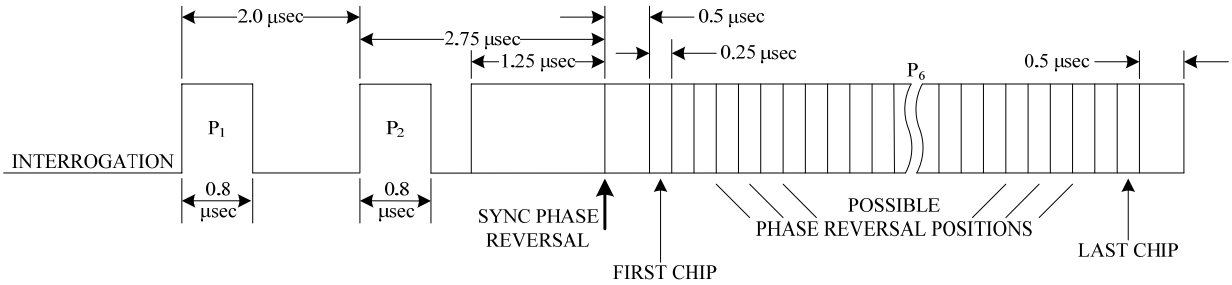

Figure 2-2: General Pulse Pattern for DPSK Interogations

Note: *The P_1-P_2 pair preceding P_6 suppresses replies from ATCRBS transponders to avoid synchronous garble caused by random triggering of ATCRBS transponders by the Mode S interrogation. A series of "chips" containing the information within P_6 starts 0.5 microsecond after the sync phase reversal. A chip is an unmodulated interval of 0.25-microsecond duration preceded by possible phase reversals. If preceded by a phase reversal, a chip represents a ONE. If preceded by no phase reversal, a chip represents a ZERO. There are either 56 or 112*

chips. The last chip is followed by a 0.5-microsecond guard interval which prevents the trailing edge of P_6 from interfering with the demodulation process.

2.1.11.4.1 Pulse Shapes

Pulses P_1, P_2 and P_5 have the same shapes as pulses P_1, P_2 and P_3 of §2.1.11.3.1.

P_6 is either 16.25 ±0.25 microseconds or 30.25 ±0.25 microseconds in duration. Its rise time is between 0.05 and 0.1 microsecond, and the decay time is between 0.05 and 0.2 microsecond.

2.1.11.4.2 Relative Pulse Amplitudes

The P_2 amplitude is not more than 0.25 dB below the amplitude of P_1. The first microsecond of P_6 has amplitude not more than 0.25 dB below the amplitude of P_1. The amplitude variation of the envelope of P_6 is less than 1 dB. Amplitude variation between successive phase modulation chips in P_6 is less than 0.25 dB.

2.1.11.4.3 Phase Reversals

The first phase reversal within P_6 is the sync phase reversal. The midpoint of each following data phase reversal can occur only at a time 0.25 N ±0.02 microsecond (where N is larger than or equal to 2) after the sync phase reversal.

2.1.11.4.4 Spacings

Spacings are provided below in microseconds.

P_1 - P_2	2.00 ±0.05
P_2 to sync phase reversal	2.75 ±0.05
P_6 to sync phase reversal	1.25 ±0.05
P_5 to sync phase reversal	0.4 ±0.1

P_5 may be overlaid on P_6 by the interrogator as an SLS signal in any Mode S interrogation. It will be overlaid on all Mode S-Only All-Call interrogations.

2.1.11.4.5 Information Content

DPSK signals contain information in data chips within P_6. The chips are located after the possible data phase reversals assigned as indicated in §2.1.11.4.3. The short or long P_6 pulses have 56 and 112 chips, respectively. A phase reversal preceding a chip characterizes that chip as ONE. No preceding phase reversal denotes a ZERO.

DRAFT © 2007 RTCA, Inc.

2.2 Minimum Performance Standards — Standard Conditions and Signals

Note: *Systems using Mode S capabilities are generally used for air traffic control surveillance systems. In addition, certain ATC applications may use Mode S emitters e.g., for vehicle surface surveillance or for fixed target detection on surveillance systems. Under such specific conditions, the term "aircraft" can be understood as "aircraft or vehicle" (A/V). While those applications may use a limited set of data, any deviation from standard physical characteristics must be considered very carefully by the appropriate authorities. They must take into account not only their own surveillance (SSR) environment, but also possible effects on other systems like TCAS.*

2.2.1 Definition of Standard Conditions

The signal levels specified in this subsection exist at the antenna end of a transponder-to-antenna transmission line of loss equal to the maximum for which the transponder is designed.

Note: *The transponder will usually be installed with less than the designed maximum transmission line loss. Nevertheless, the standard conditions of this document are based on the maximum design value.*

2.2.2 Receiver Characteristics[2]

2.2.2.1 Interrogation Tolerances

Paragraph §2.1.11 and its subparagraphs define a number of deviations allowed in the interrogation values. The transponder **shall** be tolerant to all such deviations within the ranges specified in §2.1.11.

2.2.2.2 Sensitivity Variation With Frequency

The RF input level required to produce 90 percent replies **shall** not vary by more than 1 dB and **shall** at no time exceed a level of -69 dBm for standard ATCRBS interrogation signals in the frequency range between 1029.8 and 1030.2 MHz.

2.2.2.3 Bandwidth

The standard ATCRBS interrogation signal required to trigger the transponder below 1005 MHz and above 1055 MHz **shall** be at least 60 dB stronger than that required to trigger the transponder at 1030 MHz with the same reply efficiency.

---

[2] Although receiver characteristics for frequency and bandwidth in subparagraphs §2.2.2.1 through §2.2.2.4 are specified in terms of ATCRBS interrogations and replies, the specifications are adequate for both ATCRBS and Mode S interrogations.

DRAFT © 2007 RTCA, Inc.

Note: *There is no requirement that the 3 dB bandwidth and the skirt ratio be tested. It is known that a 3 dB bandwidth of 6 MHz and a 40 dB bandwidth of 30 MHz will be optimum for Mode S performance in the presence of ATCRBS interference and will be near optimum for ATCRBS performance.*

2.2.2.4 Sensitivity and Dynamic Range

Given an interrogation that requires a reply, the minimum triggering level (MTL) is defined as the minimum input power level that results in a 90 percent reply ratio if the interrogation signal has all nominal pulse spacings and widths and if the replies are the correct replies assigned to the interrogation format.

a. The MTL for ATCRBS and ATCRBS/Mode S All-Call interrogations **shall** be -73 dBm ±4 dB.

b. The MTL for Mode S format (P_6 type) interrogations **shall** be -74 dBm ±3 dB.

c. The reply ratio **shall** be at least 99 percent for all Mode S (P_6 type) interrogations between MTL +3 dB and -21 dBm.

d. The reply ratio **shall** not be more than 10 percent for interrogations at signal levels below -81 dBm.

e. The variation of the MTL between ATCRBS Mode A and Mode C interrogations **shall** not exceed 1 dB.

f. The reply ratio **shall** be at least 90 percent for ATCRBS and ATCRBS/Mode S All-Call interrogations between MTL and -21 dBm.

2.2.3 Transmitter Characteristics

2.2.3.1 Reply Transmission Frequency

The carrier frequency of all downlink transmissions from transponders with Mode S capabilities **shall** be 1090 MHz plus or minus 1 MHz.

2.2.3.2 RF Peak Output Power

The RF peak output power of each pulse of each reply at the terminals of the antenna **shall** be:

a. minimum RF peak power for equipment intended for installation in aircraft that operate at altitudes not exceeding 15,000 feet and that have a normal cruising speed less than 175 knots: 18.5 dBW (70 W).

b. minimum RF peak power for equipment intended for installation in aircraft that have a normal cruising speed in excess of 175 knots: 21.0 dBW (125 W).

DRAFT © 2007 RTCA, Inc.

c. minimum RF peak power for equipment intended for installation in aircraft that operate at altitudes above 15,000 feet: 21.0 dBW (125 W).

d. maximum RF peak power for all equipment: 27.0 dBW (500 W).

2.2.3.3 Unwanted Output Power

When the transponder transmitter is in the inactive state, the RF output power at 1090 ±3 MHz at the terminals of the antenna **shall** not exceed -50 dBm. The inactive state is defined to include the entire period between ATCRBS and/or Mode S transmissions less 10-microsecond transition periods, if necessary, preceding and following the extremes of the transmission.

Notes:

1. *This is necessary to ensure that Mode S-equipped aircraft operating as near as 0.1 NM to an ATCRBS or Mode S sensor will not degrade the operation of that sensor. Also, an on-board 1090 MHz receiver, e.g., a collision avoidance system (CAS) installation, may be interfered with by CW radiation from the transponder. Therefore, lower unwanted CW power output may be required for use in aircraft installations where sufficient isolation cannot be achieved.*

2. *If the transponder is used in conjunction with TCAS equipment, the RF power in the inactive state at 1090 MHz at the terminals of the Mode S transponder antenna **shall** not exceed -70 dBm.*

2.2.3.4 Reply Rate Capability

The total reply rate over each time interval specified below **shall** be the sum of the individual ATCRBS and Mode S reply rates over this interval.

2.2.3.4.1 ATCRBS Reply Rate Capability

a. The transponder **shall** be able to continuously generate at least 500 ATCRBS 15-pulse replies per second.

b. If intended for installation in aircraft that operate at altitudes above 15,000 feet, the transponder **shall** be capable of a peak reply rate of 1,200 ATCRBS 15-pulse replies per second for a duration of 100 milliseconds.

c. If intended for installation in aircraft that operate at altitudes not exceeding 15,000 feet, the transponder **shall** be capable of a peak reply rate of 1,000 ATCRBS 15-pulse replies per second for a duration of 100 milliseconds.

Note: *A 15-pulse reply includes 2 framing pulses, the 12 information pulses, and the SPI pulse.*

DRAFT © 2007 RTCA, Inc.

2.2.3.4.2 Mode S Reply Rate Capability

a. A transponder equipped for only short Mode S downlink formats (DF), **shall** have the following minimum reply rate capabilities:

50 Mode S replies in any 1-second interval.
18 Mode S replies in a 100-millisecond interval.
8 Mode S replies in a 25-millisecond interval.
4 Mode S replies in a l.6-millisecond interval.

b. A transponder equipped for long Mode S reply formats **shall** be able to transmit as long replies:

At least 16 of the 50 Mode S replies in any 1-second interval.
At least 6 of the 18 Mode S replies in a 100-millisecond interval.
At least 4 of the 8 Mode S replies in a 25-millisecond interval.
At least 2 of the 4 Mode S replies in a l.6-millisecond interval.

c. A transponder equipped with the enhanced data link protocols (see §2.2.21) **shall** be able to transmit as long replies:

At least 24 of the 50 Mode S replies in any 1-second interval.
At least 9 of 18 Mode S replies in a 100-millisecond interval.
At least 6 of 8 Mode S replies in a 25 millisecond interval.
At least 2 of 4 Mode S replies in a 1.6 millisecond interval.

All of the above reply rates **shall** be in addition to any squitter transmissions that the transponder is required to make.

Note: *Higher reply rates are required by a TCAS-compatible transponder (see §2.2.22.b.).*

2.2.3.5 Mode S ELM Peak Reply Rate

At least once every second, a transponder equipped for ELM downlink operation **shall** have the capability of transmitting, in a 25-millisecond interval, 25 percent more segments than have been announced in the initialization.

Note: *Transponders may exist which are capable of transmitting less than the maximum allowable number of Comm-D segments in one burst. The requirement for 25 percent surplus transmitting capacity is derived from the possible need for reinterrogation.*

2.2.4 Reply Pulse Characteristics

The signals in space comprise two types of replies distinguished by different modulation techniques: PAM and PPM signals.

DRAFT © 2007 RTCA, Inc.

2.2.4.1 ATCRBS Replies

2.2.4.1.1 Framing Pulses

The reply function **shall** use two framing pulses nominally spaced 20.3 microseconds apart.

2.2.4.1.2 Information Pulses

The designators of the information pulses and their positions from the first framing pulse **shall** be:

PULSE	POSITION (in microseconds)
Cl	1.45
Al	2.90
C2	4.35
A2	5.80
C4	7.25
A4	8.70
X*	10.15
Bl	11.60
Dl	13.05
B2	14.50
D2	15.95
B4	17.40
D4	18.85

* The X pulse is referenced here for possible future use (see §2.2.13.1.2).

2.2.4.1.3 ATCRBS-SPI

In addition to the information pulses provided, an SPI pulse, which may be used with any of the other information pulses upon request, **shall** be provided at a spacing 4.35 microseconds following the last framing pulse. The SPI pulse **shall** be initiated by an IDENT switch. Upon activation of the IDENT switch, the SPI pulse **shall** be transmitted when replying to ATCRBS Mode A interrogations for a period of 18 ±1.0 seconds. The SPI pulse **shall** be transmitted only if the IDENT switch is first activated. The SPI pulse **shall** not be transmitted when replying to Mode C interrogations.

2.2.4.1.4 ATCRBS Reply Pulse Shape

All reply pulses and SPI pulses **shall** be 0.45 ±0.10 microsecond duration and have rise times of from 0.05 to 0.1 microsecond and decay times of from 0.05 to 0.2 microsecond. The rise and decay time may be less, providing the sideband radiation is no greater than that which would be produced theoretically by a trapezoidal wave having the stated rise and decay time. The Mode S reply spectrum requirement of §2.2.4.2.3.d is an acceptable specification for meeting ATCRBS minimum rise and fall time requirements.

The pulse amplitude variation of one pulse, with respect to any other pulse in a reply train, **shall** not exceed l dB.

DRAFT © 2007 RTCA, Inc.

Note: *The above characteristics for ATCRBS reply pulse shapes are compatible with characteristics for Mode S reply pulse shapes (see §2.2.4.2.3).*

2.2.4.1.5 ATCRBS Reply Pulse Spacing Tolerance

The pulse spacing tolerances for each pulse (including the last framing pulse) with respect to the first framing pulse of the reply group **shall** be ±0.10 microsecond. The pulse spacing tolerance of the SPI pulse with respect to the last framing pulse of the reply group **shall** be ±0.10 microsecond. The pulse spacing tolerance of any pulse in the reply group with respect to any other pulse (except the first framing pulse) **shall** be no more than ±0.15 microsecond.

2.2.4.1.6 ATCRBS Reply Delay and Jitter

a. At all RF input levels from MTL to -21 dBm, the time delay between the arrival at the transponder input of the leading edge of P_3 and the transmission of the leading edge of the first pulse of the reply **shall** be 3.0 ±0.5 microseconds.

b. At all RF input levels from 3 dB above MTL to -21 dBm, the jitter at the leading edge of the first pulse of the reply with respect to P_3 **shall** not exceed ±0.1 microsecond.

c. At all RF input levels from 3 dB above MTL to -21 dBm, the time delay variations between ATCRBS modes **shall** not exceed 0.2 microsecond.

2.2.4.2 Mode S Replies

The reply data block is formed by PPM encoding of the reply data. A pulse transmitted in the first half of the interval represents a ONE while a pulse transmitted in the second half represents a ZERO (see Figure 2-3).

2.2.4.2.1 Mode S Preamble

The preamble **shall** consist of 4 0.5 ±0.05 microsecond pulses. The second, third and fourth pulses **shall** be spaced 1.0, 3.5 and 4.5 microseconds, respectively, from the first transmitted pulse. The spacing tolerance **shall** be in accordance with §2.2.4.2.4.

DRAFT © 2007 RTCA, Inc.

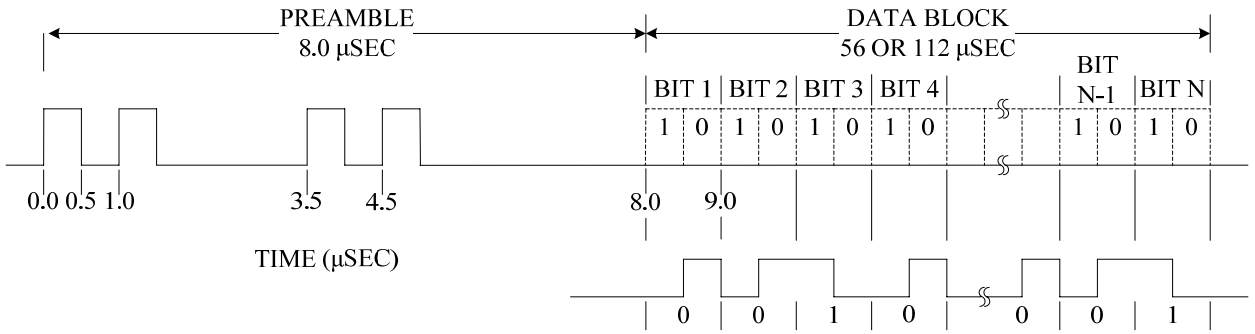

Example: Reply Data Block Waveform Corresponding to bit sequence 0010...001

Figure 2-3: Mode S Reply Waveform

2.2.4.2.2 Mode S Data Pulses

The block of reply data pulses **shall** begin 8.0 microseconds after the first transmitted pulse. Either 56 or 112 1-microsecond intervals **shall** be assigned to each transmission. A pulse with a width of 0.5 ±0.05 microsecond **shall** be transmitted either in the first or the second half of each interval. If a pulse transmitted in the second half of one interval is followed by another pulse transmitted in the first half of the next interval, the two pulses **shall** merge and a 1.0 ±0.05 microsecond pulse **shall** be transmitted.

2.2.4.2.3 Mode S Reply Pulse Shape

a. The pulse amplitude variation between one pulse and any other pulse in a reply **shall** not exceed 2 dB.

b. The pulse rise time **shall not** exceed 0.1 microsecond.

c. The pulse decay time **shall not** exceed 0.2 microsecond.

d. The spectrum of a reply **shall not** exceed the following bounds:

Frequency Difference (MHz From Carrier)	Maximum Relative Response (dB Down From Peak)
> 1.3 and < 7	3
> 7 and < 23	20
> 23 and < 78	40
> 78	60

2.2.4.2.4 Mode S Reply Pulse Spacing Tolerance

Mode S reply pulses **shall** start at a defined multiple of 0.5 microsecond from the first transmitted pulse. The pulse position tolerance **shall** be ±0.05 microsecond, measured from the first pulse of the reply.

DRAFT © 2007 RTCA, Inc.

2.2.4.2.5 Mode S Reply Delay and Jitter

a. At all RF input levels from MTL to -21 dBm, the first preamble pulse of the reply **shall** occur 128 ±0.25 microseconds after the sync phase reversal of the received P_6 of a Mode S interrogation. At all RF input levels from MTL to -21 dBm, the jitter of the reply delay **shall** not exceed ±0.08 microsecond, peak (99.9 percentile).

b. At all RF input levels from MTL to -21 dBm, the first preamble pulse of the reply **shall** occur 128 ±0.5 microseconds after the P_4 pulse of the ATCRBS/Mode S All-Call interrogation. At all RF input levels from MTL +3 dB to -21 dBm, the jitter of the reply delay **shall** not exceed ±0.1 microsecond, peak (99.9 percentile).

2.2.5 Side Lobe Suppression Characteristics

Side lobe suppression is accomplished separately for ATCRBS, ATCRBS-Only All-Call, ATCRBS/Mode S All-Call and for Mode S format interrogations.

2.2.5.1 Side Lobe Suppression, ATCRBS, ATCRBS-Only All-Call, and ATCRBS/Mode S All-Call

The transponder **shall** react to side lobe interrogations as follows:

a. Conditions Under Which the Transponder **SHALL** Be Suppressed

The transponder **shall** reply to no more than one percent of the interrogations under all combinations of the following conditions:

(1) when the pulse interval between P_1 and P_2 is varied over the range from 1.85 to 2.15 microseconds,

(2) when the RF input signal level of P_1 is varied from 3 dB above MTL to -21 dBm,

(3) when the level of P_2 equals or exceeds the level of P_1.

b. Conditions Under Which the Transponder **SHALL NOT** Be Suppressed

The transponder **shall** reply to at least 90 percent of the interrogations over the input signal level range of 3 dB above MTL to -21 dBm, when:

(l) the level of P_1 exceeds the level of P_2 by 9 dB or more,

(2) no pulse is received at the position 2.0 ±0.7 microseconds following P_1,

(3) the duration of P_2 is less than 0.3 microsecond.

DRAFT © 2007 RTCA, Inc.

c. Conditions Under Which Transponder **SHALL NOT** Reply but May Initiate Suppression

The transponder **shall** not reply with more than 10 percent reply ratio over the RF input level range from MTL to MTL +3 dB, if the amplitude of P_2 equals or is greater than the amplitude of P_1. Under the same conditions, the transponder may or may not initiate suppression.

d. Side Lobe Suppression Characteristics

(1) The suppression duration is defined as the time between the P_2 pulse initiating the suppression and the P_1 pulse of the earliest subsequent interrogation to which the transponder replies. The duration **shall** be between 25 and 45 microseconds for all ATCRBS and ATCRBS/Mode S All-Call modes.

(2) The side lobe suppression period **shall** begin after receipt of the leading edge of P_2.

(3) The side lobe suppression period **shall** be capable of being reinitiated within two microseconds after the end of any suppression period.

(4) The receiver sensitivity for ATCRBS signals **shall** be at MTL not later than one microsecond after the end of the suppression period.

(5) The two-pulse sidelobe suppression pair **shall** initiate suppression in a Mode S transponder regardless of the position of the pulse pair in a group of pulses, provided the transponder is not already suppressed or in a transaction cycle (see §2.2.18.2.2.k.).

Note: *The P_3- P_4 pair of the ATCRBS-Only All-Call interrogation both prevents a reply and initiates suppression. Likewise, the P_1- P_2 preamble of a Mode S interrogation initiates suppression independently of the waveform that follows it.*

2.2.5.2 Side Lobe Suppression, Mode S Formats

Side lobe suppression for Mode S formats is characterized by the reception of P_5, overlaying the location of the sync phase reversal of P_6.

Given an interrogation which would otherwise require a reply, the transponder **shall**:

a. at all signal levels between MTL +3 dB and -21 dBm, have a reply ratio of less than 10 percent if the received amplitude of P_5 exceeds the received amplitude of P_6 by 3 dB or more;

b. at all signal levels between MTL +3 dB and -21 dBm, have a reply ratio of at least 99 percent if the received amplitude of P_6 exceeds the received amplitude of P_5 by 12 dB or more.

DRAFT © 2007 RTCA, Inc.

2.2.6 Pulse Decoder Characteristics

Unless otherwise specified, the following pulse decoder characteristics **shall** apply over the RF input signal level range from MTL +1 dB to -21 dBm and nominal interrogation signal characteristics. Applicable "valid" interrogations **shall** result in at least 90 percent replies, and interrogations which are not valid **shall** result in less than 10 percent replies.

2.2.6.1 Pulse Level Tolerances

2.2.6.1.1 ATCRBS/Mode S All-Call

If the equipment receives a valid ATCRBS interrogation at any signal level from MTL +1 dB to -21 dBm followed by a 1.6 microsecond pulse in the P_4 position:

a. it **shall** accept the interrogation as an ATCRBS/Mode S All-Call interrogation if the received amplitude of P_4 is above the amplitude of P_3 minus 1 dB;

b. it **shall** accept the interrogation as an ATCRBS interrogation if the received amplitude of P_4 is below the amplitude of P_3 minus 6 dB.

2.2.6.1.2 ATCRBS-Only All-Call

If the equipment receives a valid ATCRBS interrogation at any signal level from MTL +1 dB to -21 dBm followed by a 0.8 microsecond pulse in the P_4 position:

a. it **shall** accept the interrogation as an ATCRBS interrogation if the received amplitude of P_4 is below the amplitude of P_3 minus 6 dB;

b. it **shall** not accept the interrogation if the received amplitude of P_4 is above P_3 minus l dB.

Note: *Mode S transponders do not accept the ATCRBS-Only All-Call.*

2.2.6.2 Pulse Position Tolerances

a. The equipment **shall** accept the pulse position of ATCRBS interrogations as valid if the spacing between P_1 and P_3 is within plus or minus 0.2 microsecond of the nominal spacing.

The transponder **shall** accept the pulse position of ATCRBS/ Mode S All-Calls as valid if the spacing between F1 and P_3 is within plus or minus 0.2 microsecond of the nominal spacing, and if the spacing between P_3 and P_4 is within plus or minus 0.05 microsecond of nominal.

b. The transponder **shall not** accept the pulse position of ATCRBS, ATCRBS/Mode S All-Call and ATCRBS-Only All-Call interrogations as valid if

DRAFT © 2007 RTCA, Inc.

the spacing between P_1 and P_3 differs from the nominal spacing by 1.0 microsecond or more.

c. The transponder **shall not** accept an interrogation as an ATCRBS/Mode S All-Call if the leading edge of P_4 is not detected within the interval from 1.7 to 2.3 microseconds following the leading edge of P_3.

2.2.6.3 Pulse Duration Tolerances

a. The transponder **shall** accept the pulses of an ATCRBS interrogation as valid if the duration of both P_1 and P_3 is between 0.7 and 0.9 microsecond.

The transponder **shall** accept an ATCRBS/Mode S All-Call interrogation as valid if the duration of both P_1 and P_3 is between 0.7 and 0.9 microsecond and if the duration of P_4 is between 1.5 and 1.7 microseconds.

b. The transponder **shall not** accept an ATCRBS/Mode S All-Call interrogation as valid if the duration of the P_4 pulse is outside of the range between 1.2 and 2.5 microseconds.

c. For all signal levels from MTL to -45 dBm, the transponder **shall** accept no more than 10 percent of ATCRBS or ATCRBS/Mode S All-Call interrogations if the duration of either the P_1 pulse or the P_3 pulse is less than 0.3 microsecond.

2.2.6.4 Sync Phase Reversal Position Tolerance

The transponder **shall** determine the location of the sync phase reversal relative to either the leading edge of P_2 or the leading edge of P_6. If the transponder determines the sync phase reversal from P_2, the sync phase reversal **shall** be accepted if it is received within the interval from 2.7 to 2.8 microseconds following the leading edge of P_2. The sync phase reversal **shall** be rejected if it is received outside of the interval from 2.55 to 2.95 microseconds following the leading edge of P_2. In the gray zones between these limits (that is, in the zone from 2.55 to 2.7 microseconds and in the zone from 2.8 to 2.95 microseconds) the transponder may or may not accept the sync phase reversal. If the transponder determines the sync phase reversal from P_6, the sync phase reversal **shall** be accepted if it is received within the interval from 1.2 to 1.3 microseconds following the leading edge of P_6. The sync phase reversal **shall** be rejected if it is received outside of the interval from 1.05 to 1.45 microseconds following the leading edge of P_6. In the gray zones between these limits (that is, in the zone from 1.05 to 1.2 microseconds and in the zone from 1.3 to 1.45 microseconds) the transponder may or may not accept the sync phase reversal.

DRAFT © 2007 RTCA, Inc.

2.2.7 Desensitization and Recovery Characteristics

2.2.7.1 Echo Suppression

2.2.7.1.1 Echo Suppression Desensitization

Upon receipt of any pulse more than 0.7 microsecond in duration (desensitization pulse), the transponder **shall** be desensitized temporarily for all received signals by raising the receiver threshold. Immediately after the desensitization pulse, the receiver threshold **shall** be between the level of the desensitization pulse and 9 dB below that, except for a possible overshoot during the first microsecond following the desensitization pulse.

2.2.7.1.2 Narrow Pulse Performance

Single pulses less than 0.7 microsecond in duration are not required to cause a specified desensitization, but if they occur **shall not** cause a desensitization of amplitude or duration greater than that permitted in §2.2.7.1.1 and §2.2.7.2.

2.2.7.2 Recovery

Following desensitization, the receiver **shall** recover sensitivity within 3 dB of MTL, within 15 microseconds after reception of the trailing edge of a desensitizing pulse having a signal strength up to 50 dB above MTL. Recovery **shall** be at an average rate not exceeding 4.0 dB per microsecond.

2.2.7.2.1 Recovery From a Mode S Interrogation If No Reply Is Required

Following a correctly addressed Mode S interrogation which has been accepted and which requires no reply, a transponder **shall** recover sensitivity to within 3 dB of MTL no later than 45 microseconds after receipt of the sync phase reversal.

2.2.7.2.2 Recovery From a Suppression Pair

The receipt of P_1 and P_2 suppression pulses may temporarily desensitize the transponder according to §2.2.7.1.1, but the suppression pairs **shall** not otherwise interfere with the reception of Mode S interrogations.

2.2.7.2.3 Recovery From a Mode S Interrogation Which Has Not Been Accepted

Following a Mode S interrogation that has not been accepted, the transponder **shall** recover sensitivity to within 3 dB of MTL no later than 45 microseconds after receipt of the sync phase reversal.

DRAFT © 2007 RTCA, Inc.

2.2.7.2.4 Recovery From Unaccepted ATCRBS/Mode S and ATCRBS-Only All-Calls

Following unaccepted ATCRBS/Mode S or ATCRBS-Only All-Calls, the transponder **shall** recover sensitivity according to §2.2.7.2.

2.2.7.2.5 Dead Time

The time interval beginning at the end of a reply transmission and ending when the receiver has regained its sensitivity to within 3 dB of MTL **shall** not exceed 125 microseconds.

Note: *Dead time should be minimized to maximize system reliability.*

2.2.7.3 Reply Rate Limiting

Reply rate limiting in a Mode S transponder **shall** be separate and independent for Mode S and ATCRBS replies.

2.2.7.3.1 ATCRBS Reply Rate Limiting

A sensitivity-reduction reply rate limit **shall** be incorporated in the transponder for ATCRBS replies. The limit **shall** be capable of being adjusted between 500 continuous ATCRBS Mode A and Mode C replies per second and the maximum continuous rate of which the transponder is capable, or 2000 replies per second, whichever is less, without regard to the number of pulses in each reply. Sensitivity reduction **shall** apply only to the receipt of ATCRBS, ATCRBS/Mode S All-Call, and ATCRBS-Only All-Call interrogations.

2.2.7.3.2 Mode S Reply Rate Limiting

If a reply rate limiting device is provided for Mode S replies, it **shall** permit at least the reply rates required in §2.2.3.4.2. A limiting device may be used to protect the transponder from accidental over-interrogation.

2.2.8 Response in the Presence of Interference

2.2.8.1 Response in the Presence of Low Level Asynchronous Interference

For all received signals levels between -65 and -21 dBm, given an interrogation that requires a reply according to §2.2.17 and if no lockout condition is in effect, the transponder **shall** reply correctly with at least 95 percent reply ratio in the presence of asynchronous interference.

Asynchronous interference consists of single 0.8 microsecond pulses with carrier frequency of 1030 ±0.2 MHz, incoherent with the Mode S signal carrier frequency and occurring at all repetition rates up to 10,000 Hz at a level 12 dB or more below the level of the Mode S signal.

DRAFT © 2007 RTCA, Inc.

Note: *Such pulses may combine with P_1 and P_2 pulses of the Mode S wave form to form a valid ATCRBS-Only All-Call wave form. The Mode S transponder does not respond to ATCRBS-Only All-Calls. A preceding pulse may also combine with the P_2 of the Mode S waveform to form a valid Mode A or Mode C wave form. Under such conditions, the P_1- P_2 pair of the Mode S preamble takes precedence.*

2.2.8.2 Response in the Presence of a Standard Interfering Pulse

A standard interfering pulse is defined as a 0.8 microsecond pulse with a carrier frequency of 1030 ±0.2 MHz that is incoherent with the Mode S signal of the test and that overlaps the P_6 of the Mode S interrogation anywhere after the sync phase reversal.

Given an interrogation that requires a reply, the reply ratio of a transponder **shall** be at least 95 percent if the level of the interfering pulse is 6 dB or more below the signal level for input signal levels between -68 and -21 dBm.

Under the same conditions, the reply ratio **shall** be at least 50 percent if the interference pulse level is 3 dB or more below the signal level.

Note: *This measurement simulates the overlay of ATCRBS pulses over the DPSK modulation of the Mode S interrogation and assures that the demodulation scheme of the transponder is effective. Designs such as narrow band filters that merely detect the occurrence of a phase change will not perform satisfactorily.*

2.2.8.3 Response in the Presence of Pulse Pair Interference

The interfering signal **shall** consist of P_1 and P_2, spaced 2 microseconds apart, with a carrier frequency of 1030 ±0.2 MHz, that is incoherent with the Mode S signal of the test. The interfering pulse pair **shall** overlay any part of the Mode S interrogation except that the leading edge of the P_1 interfering pulse **shall** occur no earlier than the P_1 pulse of the Mode S signal. Given an interrogation that requires a reply, the reply ratio of a transponder **shall** be at least 90 percent if the level of the interfering signal is 9 dB or more below the signal levels for signal level inputs between -68 and -21 dBm.

Note: *This assures that Mode S decoding is not inhibited by the receipt of ATCRBS side lobe suppression pulse pairs.*

2.2.8.4 Response in the Presence of TACAN/DME and JTIDS Interference

Given a Mode S interrogation that requires a reply, the reply ratio of the transponder **shall** be at least 90 percent for input signal levels between -68 and -21 dBm when either of the following signals is applied with the interrogation signal:

a. A TACAN/DME signal at a nominal repetition rate of 3,600 pulse pairs per second for both X and Y (12 and 30 microseconds) channel pulse spacings, at a level of -30 dBm, and over the frequency ranges of 962-1020 and 1041-1213 MHz.

DRAFT © 2007 RTCA, Inc.

b. A single pulse with a duration of 6.4 microseconds at a rate of 2,000 pulses per second, at a level of -80 dBm and a frequency of 1030 MHz.

2.2.8.5 Simultaneous Interrogation of Mode A and Mode C

If a transponder receives two valid ATCRBS pulse patterns simultaneously, it **shall**:

a. Enter the ATCRBS suppression state if one of the received pulse patterns is a P_1-P_2 suppression pair.

b. Generate a valid Mode C reply if the two received pulse patterns are Mode A and Mode C interrogations.

Note: *Simultaneous receipt of two interrogation pulse patterns can occur wherever there are two or more interrogators transmitting in the same airspace. For example, a single pulse from an interfering interrogator received 8 or 21 microseconds before the second pulse of a P_1- P_2 pair can cause the transponder to simultaneously recognize an ATCRBS interrogation and an ATCRBS suppression. When this occurs, the Mode S transponder should enter the ATCRBS suppression state. It will thereby be enabled to receive the remainder as a possible interrogation waveform following the P_1- P_2 pair. A single interference pulse received 8 microseconds before the P_3 pulse of a Mode C interrogation (or 21 microseconds before the P_3 pulse of a Mode A interrogation) can cause the transponder to simultaneously recognize both interrogation patterns. When this occurs, a Mode C reply is preferred because a missing Mode A reply usually causes less degradation of beacon tracking.*

2.2.9 Undesired Replies

2.2.9.1 ATCRBS

The random trigger rate squitter on all ATCRBS modes **shall** not be greater than 5 reply pulse groups or suppressions per second, averaged over a period of at least 30 seconds.

2.2.9.2 Mode S

In the absence of valid interrogation signals, Mode S transponders **shall** not generate unwanted Mode S replies more often than once per 10 seconds.

2.2.10 Self Test and Monitor(s)

2.2.10.1 Self Test

If a self-test feature or monitor is provided as a part of the equipment:

a. The device that radiates test interrogation signals or prevents transponder reply to proper interrogation during the test period **shall** be limited to intermittent use for no longer than that required to determine the transponder status. The test interrogation rate for ATCRBS and ATCRBS-Only All-Call interrogations **shall**

DRAFT © 2007 RTCA, Inc.

be 235 ±5 interrogations per second or a sub-multiple thereof. Test interrogations using Mode S formats, including ATCRBS/ Mode S All-Call, **shall** not exceed one of each format for which the transponder is equipped in any given test sequence.

b. The self-test interrogation signal level at the antenna end of the transmission line **shall** not exceed -40 dBm.

c. If provision is made for an automatic periodic self-test procedure, such self testing **shall** not radiate replies at an average rate exceeding one reply every ten seconds.

2.2.10.2 Squitter Monitor

A squitter monitor **shall** be provided to verify that the Mode S transponder generates short and Extended Squitters at their nominal rates (see §2.2.18.2.6 and §2.2.23.1). The transponder **shall** be considered failed when the monitor has detected squitter failure.

2.2.10.3 Mode S Address Verification

The Mode S transponder **shall** declare a transponder failure in the event that its own Mode S address is all zeros or all ones.

2.2.10.4 Failure Annunciation

An output **shall** be provided to indicate the validity/non-validity of the transponder. Failure to generate squitters at the nominal rate, a failure detected by self-test or the monitoring function, or failure of Mode S address verification **shall** cause the output to assume the invalid state. Momentary power interrupts **shall not** cause the output to assume the invalid state. The status of the transponder **shall** be annunciated to the flight crew.

2.2.11 Response to Mutual Suppression Pulses

a. The equipment **shall** accept and respond to mutual suppression pulses from other electronic equipment in the aircraft (to disable it while the other equipment is transmitting), the equipment **shall** regain normal sensitivity, within 3 dB, not later than 15 microseconds after the end of the applied mutual suppression pulse.

Note: *This document does not establish the design parameters of the mutual suppression system. However, it is recommended that all sources of mutual suppression pulses be DC coupled while sinks are AC coupled. This standardization will prevent source or sink failures from disabling all users of the mutual suppression pulses.*

b. The suppression output signal **shall** precede the transponder RF transmission by no more than 10 microsoeconds and return to the inactive state in less than 10 microseconds.

DRAFT © 2007 RTCA, Inc.

2.2.12 Diversity Operations

Diversity Mode S transponders may be implemented for the purpose of improving air-to-air surveillance and communications. Such systems **shall** employ two antennas, one mounted on the top and the other on the bottom of the aircraft. Appropriate switching and signal processing channels to select the best antenna on the basis of the characteristics of the received interrogation signals **shall** also be provided. Such diversity systems, in their installed configuration, **shall** not result in degraded performance relative to that which would have been produced by a single system having a bottom-mounted antenna.

Note: *TCAS operations require diversity operations. The use of diversity is highly recommended for any transponder installation.*

2.2.12.1 Diversity Antenna Selection and Selection Threshold

a. Diversity Antenna Selection

Antenna selection **shall** be automatic. The transponder **shall** select one of the two antennas on the basis of the relative strengths of the detected interrogation signals, provided that both channels simultaneously receive a valid identical interrogation or pulse pair. Antenna selection and switching may occur after the receipt of one of the following.

(1) The P_3 pulse of a P_1- P_3 pulse pair, indicating an ATCRBS or ATCRBS/Mode S All-Call interrogation.

(2) The P_2 pulse of a P_1- P_2 pulse pair, indicating a possible Mode S preamble.

(3) The first microsecond of P_6 of a Mode S interrogation.

(4) A complete, error-free Mode S interrogation.

The selected antenna **shall** be used to receive the remainder of the interrogation and, if necessary, to transmit the Mode S or ATCRBS reply.

b. Selection Threshold

The transponder **shall** nominally select the antenna connected to the RF port having the stronger signal. To allow for unbalance in the characteristics of the two channels, a transition zone ±3 dB wide is permitted, in which either antenna may be selected.

Additional selection can be made based on the correctness of a received complete Mode S interrogation. In this case, the RF port having the correct signal will be selected. If correctness is observed in both channels, selection **shall** be based on relative signal strength. This additional selection criterion is an optional feature.

DRAFT © 2007 RTCA, Inc.

2.2.12.2 Received Signal Delay Tolerance

If an interrogation is received at either antenna 0.125 microsecond or less in advance of reception at the other antenna, the interrogations **shall** be considered simultaneous and the reply antenna selection criteria **shall** be applied. If an interrogation is received at either antenna 0.375 microsecond or more in advance of reception at the other antenna, the antenna selected for the reply **shall** be the one which received the earlier interrogation. If the relative time of receipt is between 0.125 and 0.375 microsecond, the transponder **shall** select the reply antenna based on either the simultaneous interrogation criteria or the earlier time of arrival.

2.2.12.3 Diversity Transmission Channel Isolation

The peak RF power transmitted from the selected antenna **shall** exceed the power transmitted from the non-selected antenna by at least 20 dB.

2.2.12.4 Reply Delay of Diversity Transponders

The total difference in mean reply delay between the two antenna channels (including the transponder-to-antenna cables) **shall** not exceed 0.08 microsecond for interrogations of equal amplitude. This requirement is applicable to interrogation signal strengths between MTL +3 dB, and -21 dBm.

Note: *This requirement limits apparent jitter caused by diversity operation and by cable delay differences. The jitter requirements on each individual channel remain as specified for non-diversity transponders. Control of apparent jitter caused by antenna location is specified in §3.1.6.*

2.2.12.5 Squitter Antenna Selection

2.2.12.5.1 Acquisition Squitter

Transponders operating with antenna diversity (see §2.2.19.3.1) **shall** transmit acquisition squitters as follows:

a. When in the derived airborne state, the transponder **shall** transmit acquisition squitters alternately from the two antennas; and

b. When in the derived on-the-ground state, the transponder **shall** transmit acquisition squitters under control of the SAS subfield (see §2.2.23.1.7). In the absence of any SAS commands, use of the top antenna only **shall** be the default condition.

Notes:

1. The acquisition squitter is suppressed by aircraft that automatically determine the on-the-ground state when the aircraft is declaring the on-the-ground state (Table 2.2.16-1, §2.2.23.1.5).

DRAFT © 2007 RTCA, Inc.

2. *"Derived" signifies the state resulting from the strut switch input plus any TCS commands (see §2.2.23.1.7) received from the ground.*

2.2.12.5.2 Extended Squitter

Transponders operating with antenna diversity (see §2.2.19.3.1) **shall** transmit Extended Squitters as follows:

a. When in the derived airborne state, the transponder **shall** transmit each type of Extended Squitter alternately from the two antennas; and

b. When broadcasting the surface position format (see §2.2.23.1.2.b), the transponder **shall** transmit Extended Squitters under control of the SAS subfield (see §2.2.23.1.7). In the absence of any SAS commands, use of the top antenna only **shall** be the default condition.

2.2.13 Data Handling and Interfaces

2.2.13.1 Direct Data[3]

Direct data are those which are part of the Mode S system surveillance protocol.

2.2.13.1.1 Fixed Direct Data

Fixed direct data characterize the aircraft.

a. Mode S Discrete Address

(1) Protection of Mode S address bits – During the power-on initialization process, the transponder **shall** read in and store its 24-bit discrete address. Thereafter, the address used by the transponder **shall** not change from the value stored at power-up. The transponder should continue to monitor the 24-bit discrete address after the initial read and store at power-up. If a change in the 24-bit discrete address is detected after the initial read and store, the transponder **shall** continue to use only the 24-bit discrete address stored at power-up and **shall** generate a diagnostic error message in order to alert maintenance personnel to the occurrence of intermittent discrete address bit input data. If the transponder 24-bit discrete address is set to all ONEs or all ZEROs at startup, then this error condition **shall** be indicated to the pilot, and the transponder **shall** either transition to Standby State, Power Off Condition, or operate as a pure Mode A/C Transponder.

Notes:

1. This last requirement is imposed to specifically disallow Mode S transponders from operating with invalid addresses. This condition

[3] Data fields referred to here are defined in §2.2.14.

DRAFT © 2007 RTCA, Inc.

has been observed in airspace operations and it poses a number of unsafe conditions.

2. *If there is no other Mode S transponder active (not in Standby or a Failed condition), then TCAS will declare a "TCAS System Fail" or enter the "Standby" condition (see §2.2.22.5).*

3. *If this condition occurs at startup, then the transponder should be deactivated until the condition is corrected, or only be able to operate in pure Mode A/C only. "Pure" Mode A/C Transponders reply to all $P_1 – P_3$ and $P_1 – P_3 – P_4$ interrogations with a Mode A/C reply and do not transmit any squitter.*

4. *Accommodation should be made for those military transponders that have the capability to change the 24-bit address (e.g., so the aircraft can operate as a State aircraft with a corresponding address, or as a NATO aircraft with a NATO address). However, under no conditions may such a transponder operate as a Mode S transponder if the address is invalid.*

(2) Mode S-Only All-Call Replies – In response to a Mode S-Only All-Call interrogation, the transponder **shall** place its 24-bit discrete address in the "AA" field (see §2.2.14.4.1), bits 9-32 of the All-Call reply.

(3) All Other Mode S Transmissions – In each response to any Mode S interrogation except Mode S-Only All-Call, the transponder **shall** place its 24-bit address, overlaid on parity, in the "AP" field, bits 33-56 of short formats and bits 89-112 of long formats (see §2.2.14.4.4).

b. Maximum Airspeed

In response to certain surveillance interrogations, the transponder **shall** place an encoded indication of the aircraft's maximum normal operating airspeed into bits 14-17 of the RI field. Coding is described in §2.2.14.4.33.

c. Aircraft Identification Data

If the tail number or registration number of the aircraft is used to identify the aircraft for ATC purposes, it constitutes "fixed" data. If the aircraft uses a flight number in lieu of a registration number, then the data are no longer "fixed," but classified as "variable" (see §2.2.13.1.2).

If not equipped with the aircraft identification data capability, the transponder **shall** insert ZEROs into the appropriate field.

2.2.13.1.2 Variable Direct Data

Variable direct data characterize the flight condition of the aircraft and are therefore subject to dynamic changes. These changes are made either automatically, based on inputs received from sensors in the aircraft, or manually by the flight crew.

DRAFT © 2007 RTCA, Inc.

a. Pressure Altitude

When operated in conjunction with a pressure-altitude encoder (digitizer) or an air data system, the transponder **shall** have the capability for pressure-altitude transmission up to its designed maximum altitude. Pressure altitude reports **shall** be referenced to a standard pressure setting of 29.92 inches Hg (1013.25 hectopascals).

(1) ATCRBS – When operated in the ATCRBS system, the altitude **shall** be transmitted in response to a Mode C interrogation, encoded in accordance with ICAO Annex 10. If valid altitude information is not available to the transponder, only the framing pulses required for a Mode C response **shall** be transmitted.

(2) Mode S – When operated in the Mode S system, the 13-bit AC field (bits 20 – 32 transmitted in the short and long special surveillance reply, the altitude surveillance reply, and the altitude Comm-B reply) **shall** contain the encoded altitude of the aircraft. For aircraft with 25-foot or better pressure altitude sources, pressure altitude-information should be reported in 25-foot increments. Pressure altitude data obtained from a source with larger than 25-foot resolution **shall not** be reported using 25-foot increments. The altitude **shall** be encoded as follows:

(a) Bit 26 **shall** be designated as the M bit and **shall** be ZERO if the altitude is reported in feet. M equals ONE **shall** be reserved for possible future use to indicate that the altitude reporting is in metric units.

Note: *Use of the M bit as defined here does not alter any conventions regarding the X bit in ATCRBS replies.*

(b) If M equals ZERO, bit 28 **shall** be designated as the Q bit. Q equals ZERO **shall** be used to indicate that the Mode S altitude is reported in 100-foot increments as defined in c below. Q equals ONE **shall** be used to indicate that the altitude is reported in 25-foot increments as defined in d below.

Note: *Bit 28 (Q) corresponds to the D1 pulse of a Mode C reply and is not used in the ATCRBS altitude code.*

(c) If M and Q both equal ZERO, the altitude **shall** be coded according to the pattern for Mode C replies specified in ICAO Annex 10. Starting with bit 20, the sequence **shall** be C1, A1, C2, A2, C4, A4, ZERO, B1, ZERO, B2, D2, B4, D4.

(d) If M equals ZERO and Q equals ONE, the 11-bit field represented by bits 20 to 25, 27, and 29 to 32 **shall** represent a binary-coded field whose least significant bit has a value of 25 feet. The binary value of the decimal number N **shall** be used to report pressure altitudes in the range (25 x N - 1000 ±12.5) feet.

Note: *The most significant bit of this field is bit 20 as required by §2.2.14.4.2. This code is able to provide code values only between -1000 feet and +50,175 feet. The coding*

used for Mode C replies in "c" above must be used to report pressure altitudes greater than 50,175 feet.

(e) ZERO **shall** be transmitted in each of the 13 bits of the AC field if altitude information is not available or if the altitude has been determined to be invalid.

b. 4096 Identification Code

In response to an ATCRBS Mode A or Mode S surveillance or Comm-A identity interrogation, the transponder **shall** reply with a pilot-selectable identification code. The code designation **shall** consist of digits between 0 and 7 inclusive, and **shall** consist of the sum of the postscripts of the information pulse numbers defined in §2.2.4.1.2, employed as follows:

Digit	**Pulse Group**
First	A
Second	B
Third	C
Fourth	D

Example:

Code 3615 would consist of information pulses A1, A2 (1 + 2 = 3), B2, B4 (2 + 4 = 6), C1 (1 = 1), D1, D4 (1 + 4 = 5).

In the ATCRBS mode, this code, together with the framing pulses and a possible SPI pulse, makes up the complete Mode A reply. In Mode S, the identification pulses become the "ID" field (see §2.2.14.4.16), bits 20 – 32.

c. "On-the-Ground" Condition

The transponder **shall** report the automatically determined on-the-ground state as determined by the aircraft in the Flight Status (FS), Vertical Status (VS), and Capability (CA) fields (see §2.2.14.4.14, §2.2.14.4.42, and §2.2.14.4.6), except when reporting airborne status when on-the-ground is reported to the transponder under the conditions specified in §2.2.18.2.7.

Note: *The on-the-ground state determined by the aircraft does not include the effect of any TCS commands (see §2.2.23.1.7).*

d. Special Position Identification (SPI)

In the ATCRBS mode, an SPI pulse **shall** be transmitted upon request, following a Mode A reply. In the FS field of Mode S replies, an equivalent of the ATCRBS SPI pulse **shall** be transmitted upon the same request. The code is transmitted for 18 ±1.0 seconds after initiation and can be reinitiated at any time.

e. Aircraft Identification Data

If the aircraft uses a flight number for aircraft identification, a means **shall** be provided for the variable aircraft identification to be inserted by the pilot.

DRAFT © 2007 RTCA, Inc.

f. Radio Altitude Data

The radio altitude data input is used to support airborne/on-the-ground determination in installations that support automatic on-the-ground condition determination as specified in §2.2.18.2.7. The data supports Extended Squitter airborne/surface format transmission selection and Flight Status (FS), Vertical Status (VS), and Capability (CA) fields as provided in §2.2.23.1.5, §2.2.14.4.14, §2.2.14.4.42, and §2.2.14.4.6.

g. Ground Speed Data

The ground speed data input is used to support airborne/on-the-ground determination in installations that support automatic on-the-ground condition determination as specified in §2.2.18.2.7. The data supports Extended Squitter airborne/surface format transmission selection and Flight Status (FS), Vertical Status (VS), and Capability (CA) fields as provided in §2.2.23.1.5, §2.2.14.4.14, §2.2.14.4.42, and §2.2.14.4.6

h. Airspeed Data

The airspeed data input is used to support airborne/on-the-ground determination in installations that support automatic on-the-ground condition determination as specified in §2.2.18.2.7. The data supports Extended Squitter airborne/surface format transmission selection and Flight Status (FS), Vertical Status (VS), and Capability (CA) fields as provided in §2.2.23.1.5, §2.2.14.4.14, §2.2.14.4.42, and §2.2.14.4.6.

2.2.13.2 Indirect Data

Indirect data are those which pass through the transponder in either direction, but which do not affect the surveillance protocol. If the transponder is designed to function with data link devices outside the transponder equipment, the input and output interfaces should satisfy the following requirements. As used here, "transponder equipment" refers to a physical unit or group of units that would normally be installed as a system.

The manufacturer is free to design the interfaces with these internal data link devices as long as the requirements of the following paragraphs are met.

2.2.13.2.1 Interfaces for Indirect Data

Operational requirements of the Mode S installation influence the need for and the design of transponder interfaces for indirect data. If such interfaces are provided, those for standard Mode S transactions (see §2.2.13.3) may be separate from those for ELM service.

2.2.13.2.2 Integrity of Interface Data Transfer

If a data link interface is employed, the interface **shall** be designed to provide communication between the transponder and peripheral devices in the normal operational aircraft environment for that class of transponder to assure error rates of less than one

detected error in 10^3 112-bit transmissions and less than one undetected error in 10^7 112-bit transmissions for both uplink and downlink transfers.

2.2.13.3 Standard Transaction Interfaces

Standard Mode S transactions involve the content of all Mode S interrogation and reply formats with the possible exception of the All-Call and the Comm-C/D and the Comm-U/V formats. Various implementations of interfaces for uplink and downlink messages may be employed. In general, the transponder passes data to the data link interface regardless of the content of the 56 bit data field. The Mode S Specific Protocol (MSP) channel header must be read by a TCAS compatible transponder to determine if the MA field contains a Sensitivity Level Command to be directed to the TCAS interface (see §2.2.22.1.1). Other MSP channels may also be directed to individual interfaces (e.g., TIS MSP Channel 2, Data Flash, MSP Channel 3).

2.2.13.3.1 Uplink Interface

a. Information Content – The interface **shall** transfer the entire content of both short and long accepted uplink interrogations (with the possible exception of the AP Field) except for interrogations UF=0, 11, 16 and a UF=24 interrogation containing a request for a downlink ELM transfer (RC=3). This permits the receiving devices to properly identify the data field contents and permits possible additional parity determination at the I/O device.

b. No-Storage Design – If the interface design is based on the concept of shifting data out of the transponder as they are received, the interface **shall** be capable of transferring uplink content before the start of the corresponding reply.

c. Storage Design, Acceptance Rate – If the interface design is based on the concept of shifting data out at a slower rate, the internal storage system **shall** be able to process the content of Mode S interrogations (long or short) at a rate greater than or equal to:

50 long interrogations in any 1-second interval
18 long interrogations in any 100-millisecond interval
8 long interrogations in any 25-millisecond interval
4 long interrogations in any 1.6-millisecond interval.

Note: *Ability to receive higher interrogation rates is required by a TCAS-compatible transponder (see §2.2.22.b.).*

d. Storage Design, Non-Acceptance – The transponder **shall** not accept a Comm-A interrogation (UF=20, 21) if the data content of that interrogation cannot be processed (see 'UNABLE TO PROCESS,' Figure 2-16).

Note: *The Mode S reply is the sole means of acknowledging receipt of the content of an interrogation. Thus if the transponder is capable of replying to an interrogation, the airborne data system must be capable of accepting the data contained in that interrogation regardless of the timing between it and other accepted Mode S interrogations.*

DRAFT © 2007 RTCA, Inc.

Overlapping Mode S beams from several interrogators could lead to the requirement for considerable data handling and buffering. The minimum, prescribed in c above, reduces data handling to a realistic level. The non-acceptance provision provides for notification to the interrogator that data temporarily will not be accepted.

e. Broadcast Information – Regardless of design (No-Storage or Storage), the uplink interface **shall** have a means to indicate to the recipient that a received message was sent as a broadcast.

f. Transponder Capability – The transponder datalink communication capacity information **shall** be made available to the ADLP. This information includes the ELM capacity of the transponder and the ability of the transponder to support the enhanced datalink protocols.

Note: *This information is used by the ADLP to build the datalink capability report.*

2.2.13.3.2 Downlink Interface

a. Information Content – The interface **shall** be able to insert into the downlink transmission any bit not inserted by the transponder.

b. No-Storage Design – If the interface is designed to insert bits into the transponder for immediate transmission, such bits **shall** occur at the interface at least one microsecond before actual transmission.

c. Storage Design – Buffer Rate – If the interface shifts data into the transponder at a rate slower than the transmission rate, the internal data system **shall** be able to provide the data to support the reply rate specified in §2.2.3.4.2.

Note: *Certain transponder designs may require downlink registers called for by an RR value, as well as downlink registers called for by special formats or DI content.*

d. Storage Design – Buffer Function – The design **shall** ensure that register content **shall** not be in a state of transition during the insertion of the content in a downlink reply.

e. Unavailable Data – If an interrogation requests, as in c above, data that are not available, the transponder **shall** insert ZERO (0) into the affected fields of the reply.

Note: *The no-storage design requirement can be met by assuring that a non-connected data source or an open interface connection results in zero-level inputs. The storage design requirement can be met by assuring the transmission of "0" if the readout from a nonexistent register is requested. An input to provide information for air-initiated multisite directed transmissions (see §2.2.19.2.3.2 and §2.2.20.2.3.2) may have to be provided.*

DRAFT © 2007 RTCA, Inc.

2.2.13.4 ELM Service Interfaces

ELM transactions involve the content of Mode S interrogation and reply formats UF=DF=24, Comm-C and Comm-D respectively. The reservation and closeout protocol uses the surveillance and Comm-A/B formats, UF=DF=4, 5, 20, 21.

Separate interfaces may be provided for the uplink and the downlink, or a single interface handling both directions may be employed.

2.2.14 Description of the Mode S Signal Format

Note: *Protocols relating to the use of formats and fields are described in §2.2.17 through §2.2.19.*

2.2.14.1 Format Structure, Interrogation and Reply

Formats **shall** contain either 56 or 112 bits, the last 24 of which are used for address and parity while the rest are used for information transfer. A summary of interrogation and reply formats is presented in Figure 2-4 and Figure 2-5.

DRAFT © 2007 RTCA, Inc.

Format #	UF							
0	0 0000	- 3 -	RL: 1	- 4 -	AQ: 1	BD: 8	- 10 -	AP: 24	. . . Short Air-Air Surveillance (ACAS)
1	0 0001	27 or 83						AP: 24	
2	0 0010	27 or 83						AP: 24	
3	0 0011	27 or 83						AP: 24	
4	0 0100	PC: 3	RR: 5		DI: 3	SD: 16		AP: 24	. . . Surveillance. Altitude Request
5	0 0101	PC: 3	RR: 5		DI: 3	SD: 16		AP: 24	. . . Surveillance, Identity Request
6	0 0110	27 or 83						AP: 24	
7	0 0111	27 or 83						AP: 24	
8	0 1000	27 or 83						AP: 24	
9	0 1001	27 or 83						AP: 24	
10	0 1010	27 or 83						AP: 24	
11	0 1011	PR: 4	IC: 4		CL: 3	- 16 -		AP: 24	. . . Mode S-Only All-Call
12	0 1100	27 or 83						AP: 24	
13	0 1101	27 or 83						AP: 24	
14	0 1110	27 or 83						AP: 24	
15	0 1111	27 or 83						AP: 24	
16	1 0000	- 3 -	RL: 1	- 4 -	AQ: 1	- 18 -	MU: 56	AP: 24	. . . Long Air-Air Surveillance (TCAS)
17	1 0001	27 or 83						AP: 24	
18	1 0010	27 or 83						AP: 24	
19	1 0011	27 or 83						AP: 24	
20	1 0100	PC: 3	RR: 5		DI: 3	SD: 16	MA: 56	AP: 24	. . . Comm-A, Altitude Request
21	1 0101	PC: 3	RR: 5		DI: 3	SD: 16	MA: 56	AP: 24	. . . Comm-A, Identity Request
22	1 0110	27 or 83						AP: 24	
23	1 0111	27 or 83						AP: 24	
24	1 1xxx	RC: 2		NC: 4		MC: 80		AP: 24	. . . Comm-C (ELM)

Figure 2-4: Overview of Mode-S Interrogation Formats

Notes:

1. *[XX:M] denotes a field designated "XX" which is assigned M bits.*
2. *[- N -] denotes free coding space with N available bits. These **shall** be coded as ZEROs for transmission.*
3. *For uplink formats (UF) 0 through 23 the format number corresponds to the binary code in the first 5 bits of the interrogation. Format number 24 is defined as the format beginning with "11" in the first two bit positions while the following three bits vary with the interrogation content.*
4. *All formats are shown for completeness, although a number of them are unused. Those formats for which no application is defined remain undefined in length. Depending on future assignments, they may be short (56-bit) or long (112-bit) formats. Specific formats associated with Mode S capability levels are defined in this document.*
5. *The PC, RR, DI and SD Fields do not apply to a Comm-A broadcast interrogation.*

DRAFT © 2007 RTCA, Inc.

Format #	DF										
0	0 0000	VS: 1	CC: 1	-1-	SL: 3	-2-	RI: 4	-2-	AC: 13	AP: 24	. . . Short Air-Air Surveillance (ACAS)
1	0 0001	27 or 83								P: 24	
2	0 0010	27 or 83								P: 24	
3	0 0011	27 or 83								P: 24	
4	0 0100	FS: 3	DR: 5	UM: 6	AC: 13					AP: 24	. . . Surveillance. Altitude Reply
5	0 0101	FS: 3	DR: 5	UM: 6	ID: 13					AP: 24	. . . Surveillance, Identity Reply
6	0 0110	27 or 83								P: 24	
7	0 0111	27 or 83								P: 24	
8	0 1000	27 or 83								P: 24	
9	0 1001	27 or 83								P: 24	
10	0 1010	27 or 83								P: 24	
11	0 1011	CA: 3		AA: 24						PI: 24	. . . All-Call Reply
12	0 1100	27 or 83								P: 24	
13	0 1101	27 or 83								P: 24	
14	0 1110	27 or 83								P: 24	
15	0 1111	27 or 83								P: 24	
16	1 0000	VS: 1	-2-	SL: 3	-2-	RI: 4	-2-	AC: 13	MV: 56	AP: 24	. . . Long Air-Air Surveillance (TCAS)
17	1 0001	CA: 3	AA: 24				ME: 56			AP: 24	. . . Extended Squitter
18	1 0010	CF: 3	AA: 24				ME: 56			AP: 24	. . . Extended Squitter / Non-Transponder
19	1 0011	AF: 3	- - 104 - -								. . . Military Extended Squitter
20	1 0100	FS: 3	DR: 5	UM: 6	AC: 13	MB: 56				AP: 24	. . . Comm-B, Altitude Reply
21	1 0101	FS: 3	DR: 5	UM: 6	ID: 16	MB: 56				AP: 24	. . . Comm-B, Identity Reply
22	1 0110	27 or 83								P: 24	
23	1 0111	27 or 83								P: 24	
24	1 1xxx	- 1 -	KE: 1	ND: 4	MD: 80					AP: 24	. . . Comm-D (ELM)

Figure 2-5: Overview of Mode S Reply Formats

Notes:

1. *[XX:M] denotes a field designated "XX" which is assigned M bits. [P:24] denotes a 24-bit field reserved for parity information.*
2. *[- N -] denotes free coding space with N available bits. These **shall** be coded as ZEROs for transmission.*
3. *For downlink formats (DF) 0 through 23 the format number corresponds to the binary code in the first 5 bits of the interrogation. Format number 24 is defined as the format beginning with "11" in the first two bit positions while the following three bits vary with the reply content.*
4. *All formats are shown for completeness, although a number of them are unused. Those formats for which no application is defined remain undefined in length. Depending on future assignments, they may be short (56-bit) or long (112-bit) formats. Specific formats associated with Mode S capability levels are defined in this document.*

DRAFT © 2007 RTCA, Inc.

2.2.14.2 Bit Numbering and Sequence

Bits are numbered in order of their transmission, beginning with bit 1. If numerical values are encoded by groups of bits (fields), then the first bit transmitted is the most significant bit (MSB) unless otherwise stated.

2.2.14.3 Fields

Information is coded in fields which consist of at least one bit. The decimal equivalent of the binary code formed by the bit sequence within a field is used as the designator of the field function.

2.2.14.3.1 Essential Fields

Each Mode S transmission contains two essential fields: One describing the format and the other a 24-bit field which carries parity information and contains either the address or the interrogator identity overlaid on parity as described in §2.2.18.2.1. The format descriptor is the field at the beginning of the transmission and the 24-bit field always occurs at the end of the transmission. The formats are described by the UF or DF descriptors.

2.2.14.3.2 Mission Fields

The remaining coding space is used to transmit the mission fields. For specific missions, a specific set of fields is prescribed. Mission fields have two-letter designators.

2.2.14.3.3 Subfields

Subfields may appear within mission fields. Subfields are labeled with three-letter designators.

2.2.14.4 Field Descriptions

Fields are described in alphabetical order in the following paragraphs and are indexed in Figure 2-6.

DRAFT © 2007 RTCA, Inc.

		BITS		FORMATS		REFERENCE PARAGRAPH (S)	
FIELD	SUB FIELD	NO.	POSITION	UP	DOWN	CONTENT	PROTOCOL
AA		24	9-32		X	§2.2.14.4.1	§2.2.18.2.10
AC		13	20-32		X	§2.2.14.4.2	§2.2.18.2.10
AF		3	6-8		X	§2.2.14.4.3	§2.2.23.4.1
AP		24	33-56	X	X	§2.2.14.4.4	§2.2.18.2.1, §2.2.18.2.2
		24	89-112				
AQ		1	14	X		§2.2.14.4.5	§2.2.18.2.6
CA		3	6-8		X	§2.2.14.4.6	§2.2.18.2.8
CC		1	7		X	§2.2.14.4.7	§2.2.14.4.7
CF		3	6-8		X	§2.2.14.4.8	§2.2.23.3.1
CL		3	14-16	X		§2.2.14.4.9	§2.2.14.4.9
DF		5	1-5		X	§2.2.14.4.10	§2.2.18.2.3, §2.2.19.1.4
DI		3	14-16	X		§2.2.14.4.11	§2.2.18.2.5, §2.2.19.2.1.1, §2.2.19.1.12
DR		5	9-13		X	§2.2.14.4.12	§2.2.20.2.1.1.1, §2.2.19.1.12.4
DS		8	15-22	X		§2.2.14.4.13	§2.2.19.1.18
FS		3	6-8		X	§2.2.14.4.14	§2.2.18.2.7
IC		4	10-13	X		§2.2.14.4.15	§2.2.14.4.15
ID		13	20-32		X	§2.2.14.4.16	§2.2.18.2.10
II		4				§2.2.14.4.17	§2.2.18.2.2.g, §2.2.18.2.4 §2.2.18.2.5
KE		1	4		X	§2.2.14.4.18	§2.2.20.1.1.1.5, §2.2.20.2.1.1.2
MA		56	33-88	X		§2.2.14.4.19	§2.2.19.1.10
MB		56	33-88		X	§2.2.14.4.20	§2.2.19.1.12, §2.2.22.1.2.3
	AIS	48	41-88		X	§2.2.19.1.13	§2.2.19.1.13
	ARA	14	41-54		X	§2.2.22.1.2.1	§2.2.22.1.2.1
	ATS	1	35		X	§2.2.23.1.9	§2.2.23.1.8
	BDS	8	33-40		X	§2.2.14.4.20	§2.2.19.1.12.1, §2.2.22.1.2.1, §2.2.22.1.2.2
	MTE	1	60		X	§2.2.22.1.2.1	§2.2.22.1.2.1
	RAC	4	55-58		X	§2.2.22.1.2.1	§2.2.22.1.2.1
	RAT	1	59		X	§2.2.22.1.2.1	§2.2.22.1.2.1
	SCS	1	34		X	§2.2.19.1.12.7	§2.2.19.1.12.7
	SIC	1	35		X	§2.2.19.1.12.7	§2.2.19.1.12.7
	TID	26	63-88		X	§2.2.22.1.2.1	§2.2.22.1.2.1
	TIDA	13	63-75		X	§2.2.22.1.2.1	§2.2.22.1.2.1
	TIDB	6	83-88		X	§2.2.22.1.2.1	§2.2.22.1.2.1
	TIDR	7	76-82		X	§2.2.22.1.2.1	§2.2.22.1.2.1
	TRS	2	33-34		X	§2.2.23.1.9	§2.2.23.1.6
	TTI	2	61-62		X	§2.2.22.1.2.1	§2.2.22.1.2.1
MC		80	9-88	X		§2.2.14.4.21	§2.2.20.1.1.1
	IIS	4	9-12	X		§2.2.19.2.1.2	§2.2.19.2
	IIS	4	25-28			§2.2.19.2.1.2	§2.2.19.2
	SRS	16	9-24	X		§2.2.20.2.1.1.3	§2.2.20.2.1.1.2
MD		80	9-88		X	§2.2.14.4.22	§2.2.20.1.1.1, §2.2.20.2.1.1
	TAS	16	17-32		X	§2.2.20.1.1.1.6	§2.2.20.1.1.1.5
ME		56	33-88		X	§2.2.14.4.23	§2.2.14.4.23
	ACS	12	41-52		X	§2.2.23.1.8	§2.2.23.1.8
	SSS	2	38-39		X	§2.2.23.1.8	§2.2.23.1.8
MU		56	33-88	X		§2.2.14.4.25	§2.2.19.1.16
MV		56	33-88		X	§2.2.14.4.26	§2.2.19.1.16
	ARA	14	41-54		X	§2.2.22.1.4.2	§2.2.22.1.4.2
	MTE	1	60		X	§2.2.22.1.4.2	§2.2.22.1.4.2

DRAFT © 2007 RTCA, Inc.

		BITS		FORMATS		REFERENCE PARAGRAPH (S)	
FIELD	SUB FIELD	NO.	POSITION	UP	DOWN	CONTENT	PROTOCOL
	RAC	4	55-88		X	§2.2.22.1.4.2	§2.2.22.1.4.2
	RAT	1	59		X	§2.2.22.1.4.2	§2.2.22.1.4.2
NC		4	5-8	X		§2.2.14.4.27	§2.2.20.1.1.1
ND		4	5-8		X	§2.2.14.4.28	§2.2.20.2.1.1.2
PC		3	6-8	X		§2.2.14.4.29	§2.2.18.2.4, §2.2.19.1.12, §2.2.20.1.1.1, §2.2.20.2.1
PI		24	33-56		X	§2.2.14.4.30	§2.2.18.2.1
PR		4	6-9	X		§2.2.14.4.31	§2.2.18.2.2.i.
RC		2	3- 4	X		§2.2.14.4.32	§2.2.20.1.1.1, §2.2.20.2.1.1.3
RI		4	14-17		X	§2.2.14.4.33	§2.2.18.2.10
RL		1	9	X		§2.2.14.4.34	
RR		5	9-13	X		§2.2.14.4.35	§2.2.19.1.4, §2.2.19.1.12.2, §2.2.19.1.12.4, §2.2.19.1.13
SD		16	17-32	X		§2.2.14.4.36	§2.2.19.1.12.2, §2.2.19.2
	IIS	4	17-20	X		§2.2.14.4.36	§2.2.18.2.5, §2.2.19.2
	LOS	1	26	X		§2.2.19.2.1.1	§2.2.18.2.5
	LSS	1	23	X		§2.2.19.2.1.1	§2.2.18.2.5
	MBS	2	21-22	X		§2.2.19.2.1.1	§2.2.19.2.3.1
	MES	3	23-25	X		§2.2.19.2.1.1	§2.2.20.1.3.1, §2.2.20.2.3.1
	RCS	3	24-26	X		§2.2.23.1.7	§2.2.23.1.6
	RRS	4	21-24	X		§2.2.19.1.12.2	§2.2.19.2.1.1.(d)
	RRS	4	24-27	X		§2.2.19.1.12.2	§2.2.19.2.1.1.(f)
	RSS	2	27, 28	X		§2.2.19.2.1.1	§2.2.19.2
	SAS	2	27-28	X		§2.2.23.1.7	§2.2.12.5.1
	SIS	6	17-22	X		§2.2.19.2.1.1	§2.2.18.2.5
	TCS	3	21-23	X		§2.2.23.1.7	§2.2.23.1.5
	TMS	4	29-32	X		§2.2.19.2.1.1	
SI		6		X	X	§2.2.14.4.37	§2.2.18.2.5, §2.2.18.2.9
SL		3	9-11		X	§2.2.14.4.38	§2.2.22.3.1
UF		5	1-5	X		§2.2.14.4.40	
UM		6	14-19		X	§2.2.14.4.40	
	IDS	2	18-19		X	§2.2.19.2.1.2	
	IIS	4	14-17		X	§2.2.19.2.1.2	
VS		1	6		X	§2.2.14.4.42	§2.2.18.2.10

Figure 2-6: Field Index

Note: *The PC, RR, DI and SD Fields do not apply to a Comm-A broadcast interrogation.*

2.2.14.4.1 AA Address, Announced

This 24-bit (9-32) downlink field contains the aircraft address in the clear and is used in DF=11, the All-Call reply.

2.2.14.4.2 AC Altitude Code

This 13-bit (20-32) downlink field contains the altitude code (see §2.2.13.1.2.a.) and is used in formats DF=0, 4, 16, and 20. ZERO is transmitted in each of the 13 bits if altitude information is not available. Metric altitude is contained in this field if the M-bit (26) is ONE.

DRAFT © 2007 RTCA, Inc.

2.2.14.4.3 AF Application Field

This 3-bit (6-8) downlink field in DF=19 **shall** be used to define the format of the 112-bit transmission.

Code 0 = ADS-B Format
Code 1 to 7 = Reserved

2.2.14.4.4 AP Address/Parity

This 24-bit field (33-56 or 89-112) contains parity overlaid on the address according to §2.2.18.2.1 and appears at the end of all uplink and currently defined downlink formats with the exception of format DF=11.

2.2.14.4.5 AQ Acquisition Special

This 1-bit field (14) designates formats UF=0, 16 as acquisition transmissions and is repeated as received by the transponder in DF=0, 16 (see Note in §2.2.14.4.33).

2.2.14.4.6 CA Transponder Capability

This 3-bit (6-8) downlink field is used in DF=11, the All-Call reply and acquisition squitter, and in DF=17, the Extended Squitter. The codes are:

Code	Description
0	signifies no communications capability (surveillance only), no ability to set CA code 7, either on the ground or airborne
1	Not used
2	Not used
3	Not used
4	signifies at least Comm-A and Comm-B capability, ability to set CA code 7, on the ground
5	signifies at least Comm-A and Comm-B capability, ability to set CA code 7, airborne
6	signifies at least Comm-A and Comm-B capability, ability to set CA code 7, either on the ground or airborne
7	signifies DR is NOT equal to ZERO, or FS equals 2, 3, 4 or 5, either on the ground or airborne (see §2.2.14.4.8 and §2.2.14.4.9)

When the conditions for CA code 7 are not satisfied, installations that have communications capability but do not have automatic means to set on-the-ground conditions **shall** use CA code 6. Aircraft with automatic on-the-ground determination **shall** use CA codes 4 and 5. Data link capability reports (see §2.2.19.1.12.5) **shall** be available for CA codes 4, 5, 6 and 7.

Note: *CA codes 1 to 3 were used by earlier Mode S transponders that did not use CA code 7. Transponders with these codes provide a data link capability report (see §2.2.19.1.12.5). No data link transactions other than GICB extraction including*

DRAFT © 2007 RTCA, Inc.

aircraft identity, TCAS RA extraction, and downlink broadcast extraction, should be attempted with these transponders.

2.2.14.4.7 CC: Crosslink Capability

This 1-bit (7) downlink field **shall** indicate the ability of the transponder to support the crosslink capability, i.e., decode the contents of the DS field in a UF=0 interrogation and respond with the contents of the specified ground-initiated Comm-B register in the MV field of the corresponding DF=16 reply. It is used in format DF=0. The codes are:

0 = aircraft cannot support the crosslink capability
1 = aircraft supports the crosslink capability.

2.2.14.4.8 CF Control Field

This 3-bit (6-8) downlink field in DF=18 **shall** be used to define the format of the 112-bit transmission.

Code 0	=	ADS-B format
Code 1 to 7	=	Reserved

2.2.14.4.9 CL Code Label

This 3-bit (14-16) uplink field **shall** define the contents of the IC field.

Coding (in binary):

Code	Description
000	IC Field contains the II code
001	IC Field contains SI codes 1 to 15
010	IC Field contains SI codes 16 to 31
011	IC Field contains SI codes 32 to 47
100	IC Field contains SI codes 48 to 63

The other values of the CL field **shall** not be used.

Note: *The II code is defined in §2.2.14.4.17 and the SI code is defined in §2.2.14.4.37.*

2.2.14.4.10 DF Downlink Format

The first field in all downlink formats is the transmission descriptor and is coded according to Figure 2-5, Note (3).

DRAFT © 2007 RTCA, Inc.

2.2.14.4.11 DI Designator Identification

This three-bit (14-16) uplink field identifies the coding contained in the SD field in formats UF=4, 5, 20 and 21. The codes are:

Code	Description
0	SD contains IIS (see §2.2.19.2.1.1), bits 21-32 are not assigned
1	SD contains multisite II lockout and multisite data link protocol information (see §2.2.19.2.1.1)
2	SD contains Extended Squitter control information (see §2.2.23.1.6)
3	SD contains multisite SI lockout information (see §2.2.19.2.1.1) and extended data readout (see §2.2.19.1.12.2)
4	Not assigned
5	Not assigned
6	Not assigned
7	SD contains extended data readout request (see §2.2.19.1.12.2)

2.2.14.4.12 DR Downlink Request

This 5-bit (9-13) downlink field is used to request extraction of downlink messages from the transponder by the interrogator and appears in formats DF=4, 5, 20 and 21. The codes are:

Code	Description
0	No downlink request
1	Request to send air-initiated Comm-B message (B bit set) (see §2.2.19.1.12.4)
2	TCAS information available
3	TCAS information available and request to send Comm-B message
4	Comm-B broadcast #1 available
5	Comm-B broadcast #2 available
6	TCAS information and Comm-B broadcast #1 available
7	TCAS information and Comm-B broadcast #2 available
8 – 15	Not assigned
16 – 31	See Comm-D protocol, (see §2.2.20.2.1.1)

Codes 1-15 **shall** take precedence over codes 16-31 to permit the announcement of a Comm-B message to interrupt the announcement of a downklink ELM. This gives priority to the announcement of the shorter message. Announcement of the downlink ELM **shall** resume when the Comm-B is cleared.

2.2.14.4.13 DS: Comm-B Data Selector

This 8-bit (15-22) uplink field **shall** contain the identity of the ground-initiated Comm-B register whose contents are to appear in the MV field of the corresponding reply. It is used in format UF=0.

DRAFT © 2007 RTCA, Inc.

Note: *The DS field is not included in UF=16 in order to eliminate any possible protocol interaction with the TCAS coordination function.*

2.2.14.4.14 FS Flight Status

This 3-bit (6-8) downlink field reports the flight status of the aircraft and is used in formats DF=4, 5, 20 and 21. Aircraft without the means of automatically determining the on-the-ground condition **shall** always report airborne state. The codes are:

Code	Alert	SPI	Airborne	On the Ground
0	no	no	yes	no
1	no	no	no	yes
2	yes	no	yes	no
3	yes	no	no	yes
4	yes	yes	Either	
5	no	yes	Either	
6 is reserved and 7 is not assigned				

2.2.14.4.15 IC Interrogator Code

This 4-bit (10-13) uplink field **shall** contain either the 4-bit II code (§2.2.14.4.17) or the lower 4 bits of the 6-bit SI code (§2.2.14.4.37) depending on the value of the CL field (§2.2.14.4.9).

2.2.14.4.16 ID Identification (4096 code)

This 13-bit (20-32) downlink field in DF=5, 21 contains the 4096 identification code reporting the numbers as set by the pilot (see §2.2.13.1.2.b.).

2.2.14.4.17 II Interrogator Identification

This 4-bit value **shall** define an interrogator identifier (II) code. These II codes **shall** be assigned to interrogators in the range of 0 to 15. An II code value of ZERO **shall** not be used by interrogators which use the multisite lockout protocols (see §2.2.18.2.5) or multisite communications protocols (see §2.2.19.2).

Note: *The same information also may appear in the IIS subfields (see §2.2.19.2.1.1 and §2.2.19.2.1.2).*

DRAFT © 2007 RTCA, Inc.

2.2.14.4.18 KE Control, ELM

This 1-bit (4) downlink field defines the content of the ND and MD fields in Comm-D replies, DF=24. For coding see §2.2.20.1.1.1.5 and §2.2.20.2.1.1.2.

2.2.14.4.19 MA Message, Comm-A

This 56-bit (33-88) uplink field contains messages directed to the aircraft and is part of Comm-A interrogations, UF=20, 21.

2.2.14.4.20 MB Message, Comm-B and BDS B-Definition Subfield

a. MB Message, Comm-B

This 56-bit (33-88) downlink field contains messages to be transmitted to the interrogator and is part of the Comm-B replies DF=20, 21. In those formats that are transmitted using the ground-initiated Comm-B protocol of §2.2.19.1.12.3, the MB field contains the 8-bit Comm-B definition Subfield BDS.

b. BDS B-Definition Subfield

When included in MB, this 8-bit (33-40) downlink subfield defines the content of the MB message field of which it is part. BDS is expressed in two groups of 4 bits each, BDSl (33-36) and BDS2 (37-40).

Note: *The BDS subfield is only used in the MB field of a GICB message that may also be delivered via the broadcast Comm-B protocol. In this case the BDS field is needed to identify the contents of the message data. The BDS field is not used for GICB messages that are never sent via the broadcast protocol.*

2.2.14.4.21 MC Message, Comm-C

This 80-bit (9-88) uplink field **shall** contain:

a. One of the segments of a sequence used to transmit an uplink ELM to the transponder containing the 4-bit (9-12) IIS subfield; or

b. Control fields for requesting one or more downlink ELM segments; the 16-bit (9-24) SRS subfield (§2.2.20.2.1.1.3) and the 4-bit (25-28) IIS subfield.

The MC field is contained in UF=24.

2.2.14.4.22 MD Message, Comm-D

This 80-bit (9-88) downlink field contains one segment of a sequence of segments transmitted by the transponder in the ELM mode. It may also contain a summary of received MC segments of an uplink ELM. MD is part of DF=24.

DRAFT © 2007 RTCA, Inc.

2.2.14.4.23 ME Message, Extended Squitter

This 56-bit (33-88) downlink field is used to broadcast messages. It is used in format DF=17.

2.2.14.4.24 MSP Channel Header

The format for the Mode-S Specific Protocol (MSP) Channel Header is as follows:

DP: 1	MP: 1	M/CH: 6

Data Packet Type (DP): This field is set to 0.

MSP Packet Type (MP): This field is set to 0 to indicate that this is a Short Form MSP Packet.

MSP Channel Number (M/CH): The field is set to the channel number derived from the SSE control data (Table B-2-2).

2.2.14.4.25 MU Message, Comm-U

This 56-bit (33-88) uplink field contains information used in air-to-air exchanges and is part of the long special surveillance interrogation UF=16. This message field does not use the Comm-A protocol.

2.2.14.4.26 MV Message, Comm-V

This 56-bit (33-88) downlink field contains information used in air-to-air exchanges and is part of the long special surveillance reply DF=16. This message field does not follow the Comm-B protocol.

2.2.14.4.27 NC Number of C-Segment

This 4-bit (5-8) uplink field gives the number of a segment transmitted in an uplink ELM and is part of a Comm-C interrogation, UF=24. The protocol is described in §2.2.20.1.1.1.

2.2.14.4.28 ND Number of D-Segment

This 4-bit, (5-8) downlink field gives the number of a segment transmitted in a downlink ELM and is part of a Comm-D reply, DF=24. The protocol is described in §2.2.20.2.1.1.

DRAFT © 2007 RTCA, Inc.

2.2.14.4.29 PC Protocol

This 3-bit (6-8) uplink field contains operating commands to the transponder and is part of surveillance and Comm-A interrogations UF=4, 5, 20, 21. The codes are:

Code	Description
0	No changes in transponder state
1	Non-selective All-Call lockout
2	Not assigned
3	Not assigned
4	Close out B (see §2.2.19.1.12)
5	Close out C (see §2.2.20.1.1.1.7)
6	Close out D (see §2.2.20.2.1.1.4)
7	Not assigned

The PC field **shall** be ignored for the processing of surveillance or Comm-A interrogations containing DI=3 (see §2.2.19.2.1.1).

2.2.14.4.30 PI Parity/Interrogator Identity

This 24-bit (33-56) downlink field contains the parity overlaid on the interrogator's identity code according to §2.2.18.2.1. PI is part of the Mode S All Call Reply and acquisition squitter (DF=11), and the Mode S Extended Squitter (DF=17).

The code used in downlink PI field generation **shall** be formed by a sequence of 24 bits (a_1, a_2, . . . a_{24}) where the first 17 bits are ZEROs, the next three bits are a replica of the code label (CL) field (see §2.2.14.4.9) and the last four bits are a replica of the interrogator code (IC) field (§2.2.14.4.15).

If the reply is made in response to a Mode A/C/S All-Call, a Mode S-only All-Call with CL field and IC field equal to ZERO, or is an acquisition or Extended Squitter, the II (see §2.2.14.4.17) and the SI (see §2.2.14.4.37) codes **shall** be set to ZERO.

DRAFT © 2007 RTCA, Inc.

2.2.14.4.31 PR Probability of Reply

This 4-bit (6-9) uplink field contains commands to the transponder which specify the reply probability to the Mode S-Only All-Call interrogation UF=11 that contains the PR. A command to disregard any lockout state can also be given. The assigned codes are as follows:

Code	Description
0	Reply with probability = 1.
1	Reply with probability = 1/2.
2	Reply with probability = 1/4.
3	Reply with probability = 118.
4	Reply with probability = 1/16.
5, 6, 7	Do not reply.
8	Disregard lockout, reply with probability = l.
9	Disregard lockout, reply with probability = 1/2.
10	Disregard lockout, reply with probability = 1/4.
11	Disregard lockout, reply with probability = 1/8.
12	Disregard lockout, reply with probability = l/16.
13, 14, 15	Do not reply.

Note: *On receipt of a Mode S-Only All-Call containing a PR code other than 0 or 8, the transponder executes a random process and makes a reply decision for this interrogation in accordance with the commanded probability. Random occurrence of replies enables the interrogator to acquire closely spaced aircraft whose replies would otherwise synchronously garble each other.*

2.2.14.4.32 RC Reply Control

This 2-bit (3-4) uplink field designates the transmitted segment as initial, intermediate or final if coded 0, l, 2 respectively. RC=3 is used to request Comm-D downlink action by the transponder. RC is part of the Comm-C interrogation, UF=24. The protocols are described in §2.2.20.1.1.1 and §2.2.20.2.1.1.2.

DRAFT © 2007 RTCA, Inc.

2.2.14.4.33 RI Reply Information, Air-To-Air

This 4-bit (14-17) downlink field appears in the special surveillance replies DF=0, 16 and reports airspeed capability and type of reply to the interrogating aircraft. The coding is as follows:

Code	Description
0 – 7	Codes indicate that this is the reply to an air-to-air non-acquisition interrogation.
8 – 15	Codes indicate that this is an acquisition reply.
0	Non on-board TCAS
1	Not Assigned
2	On-board TCAS with resolution capability inhibited
3	On-board TCAS with vertical-only resolution capability
4	On-board TCAS with vertical and horizontal resolution capability
5 – 7	Not Assigned
8	No maximum airspeed data available.
9	Airspeed is less than or equal to 75 knots.
10	Airspeed is greater than 75 and less than or equal to 150 knots.
11	Airspeed is greater than 150 and less than or equal to 300 knots.
12	Airspeed is greater than 300 and less than or equal to 600 knots.
13	Airspeed is greater than 600 and less than or equal to 1200 knots.
14	Airspeed is greater than 1200 knots.
15	Not Assigned.

Note: *Bit 14 of this field replicates the AQ bit (see §2.2.14.4.5) of the interrogation resulting in the coding scheme above.*

2.2.14.4.34 RL Reply Length

This 1-bit (9) uplink field in UF=0, 16 commands a reply of DF=0 if ZERO, and a reply of DF=16 if ONE.

DRAFT © 2007 RTCA, Inc.

2.2.14.4.35 RR Reply Request

This 5-bit (9-13) uplink field contains length and content of the reply requested by the interrogators. RR is part of the surveillance and Comm-A interrogations UF=4, 5, 20, 21. The codes are outlined below:

RR Code	Reply Length	MB Content
0-15	Short	-------
16	Long	Air-Initiated Comm B (§2.2.19.1.12.4)
17	Long	Data Link Capability Report (§2.2.19.1.12.5)
18	Long	Flight ID (§2.2.19.1.13)
19	Long	TCAS Resolution Advisory Report (§2.2.22.3.4)
20-31	Long	Not Assigned

Note: *If the first bit of the RR code is ONE, the last four bits of the 5-bit RR code, if transformed into their decimal equivalent, designate the number (BDS1) of the requested source. BDS2 is assumed to be ZERO if not specified by DI=3 or 7 and RRS.*

2.2.14.4.36 SD Special Designator and IIS, Subfield in SD

a. SD Special Designator

This 16-bit (17-32) uplink field can contain control codes affecting transponder protocol and is part of surveillance and Comm-A interrogations UF=4, 5, 20, 21. The content of this field is specified by the DI field.

b. IIS, Subfield in SD

This 4-bit subfield (17-20) appears in all SD fields of uplink formats 4, 5, 20 and 21 if the DI code is 0, 1 or 7. IIS is the Interrogator Identifier.

2.2.14.4.37 SI Surveillance Identifier

This 6-bit value **shall** define a surveillance identifier (SI) code which is derived from the CL and IC fields of UF=11, or received directly in the SIS subfield (see §2.2.19.2.1.1). These SI code values are assigned to interrogators in the range of 1 to 63. An SI value of ZERO will not be used. The SI codes are used with the multisite lockout protocols (see §2.2.18.2.5). The SI codes are not be used with the multisite communications protocols, which require the use of II codes. Therefore, an interrogator operating with an SI code will be limited to the following data link capabilities:

a. Unlinked Comm-A
b. Broadcast Comm-A
c. Ground-Initiated Comm-B (GICB)
d. Broadcast Comm-B
e. TCAS/ACAS Downlink Transactions

DRAFT © 2007 RTCA, Inc.

Notes:

1. *The SI lockout facility can not be used unless all Mode S transponders within coverage range are equipped for this purpose.*

2. *This specifically excludes the use of air-initiated Comm-B (AICB) protocol, which is required for data flash and downlink MSPs.*

2.2.14.4.38 SL TCAS Sensitivity Level Report

This 3-bit (9-11) field appears in special surveillance reply formats DF=0, 16 (for TCAS-compatible transponders only). This field reports the sensitivity level at which the TCAS unit is currently operating.

The codes are:

Code	Description
0	No TCAS sensitivity level reported.
1	TCAS is operating at sensitivity level 1.
2	TCAS is operating at sensitivity level 2.
3	TCAS is operating at sensitivity level 3.
4	TCAS is operating at sensitivity level 4.
5	TCAS is operating at sensitivity level 5.
6	TCAS is operating at sensitivity level 6.
7	TCAS is operating at sensitivity level 7.

2.2.14.4.39 TMS Subfield

The Tactical Message Subfield (TMS), is a 4-bit subfield in SD (bits 29 through 32). This subfield is used for identifying linkage of Comm-A messages, with "0" indicating an unlinked message. Coding for this field is not described in this document.

2.2.14.4.40 UF Uplink Format

The first field in all uplink formats is the transmission descriptor in all interrogations and is coded according to Figure 2-4, Note (3).

2.2.14.4.41 UM Utility Message in DF=4, 5, 20, 21

This 6-bit (14-19) downlink field in DF=4, 5, 20, 21 contains transponder status readouts.

2.2.14.4.42 VS Vertical Status

This 1-bit (6) downlink field in DF=0, 16 indicates, when ZERO, that the aircraft is airborne and, when ONE, that the aircraft is on the ground. Aircraft without the means of automatically determining the on-the-ground condition **shall** always report airborne state.

DRAFT © 2007 RTCA, Inc.

2.2.14.4.43 Free and Unassigned Coding Space

Free coding space as indicated in Figure 2-4 and Figure 2-5 contains all ZEROs as transmitted by interrogators and transponders. Non-assigned coding space within existing fields is reserved for possible future use.

2.2.14.4.44 Future Coding

Because yet unassigned free coding space is transmitted as ZEROs, future coding must define a ZERO's block as a default code, i.e., no message is sent, no command given, no capability exists if a future new field contains all ZEROs.

2.2.15 Antenna

2.2.15.1 Frequency Requirements

The antenna **shall** be designed to receive and transmit vertically polarized signals in the frequency range of 1030 to 1090 MHz.

2.2.15.2 Impedance and VSWR

The VSWR produced by the antenna when terminated in a 50 ohm transmission line **shall** not exceed 1.5:1 over the 1030 to 1090 MHz frequency band.

2.2.15.3 Polarization

The antenna **shall** be vertically polarized.

2.2.15.4 Radiation Pattern

The gain **shall** not be less than the gain of a matched quarter-wave stub minus 3 dB over 90 percent of a coverage volume from 0 to 360 degrees in azimuth and from 5 to 30 degrees above the ground plane when installed at the center of 1.2 meter (4 feet) diameter (or larger) flat circular ground plane.

2.2.16 Power Interruption

The transponder **shall** regain full operational capability to within its operational limits within two seconds after the restoration of power following a momentary power interruption.

Note: *The transponder is not required to continue operating during momentary power interruptions.*

DRAFT © 2007 RTCA, Inc.

2.2.17 Mode S Transponders

The Mode S transponder supports ground-to-air and air-to-air surveillance.

Paragraph §1.4.3 of this document indicates capabilities that become available through the use of Mode S and its data link. The paragraphs which follow provide a more detailed description of these various capabilities as they relate to the specific features which must exist within Mode S avionics. Each capability requires that the unit properly handle the associated formats, message fields, protocols and interfaces as specified in the referenced paragraphs.

Elementary Surveillance (ELS, §2.2.24) is part of the basic requirements for all Mode-S transponders for International air traffic. These basic requirements encompass Level 2 Transponder support as per §2.2.19.

2.2.18 Level 1 Mode S Transponder

This transponder supports the ground-based surveillance functions of both ATCRBS and Mode S and also air-to-air surveillance. It **shall** generate replies to valid ATCRBS Mode A and C interrogations. The Mode S formats to be processed and protocol requirements for this transponder are defined in the following paragraphs.

2.2.18.1 Mode S Formats

The transponder processes the 56-bit interrogations and 56-bit reply formats, listed in Figure 2-7 and Figure 2-8. See §2.2.14.4 for definition and coding of the applicable fields.

Format #	UF							
0	0 0000	- 3 -	RL: 1	- 4 -	AQ: 1	- 18 -	AP: 24	. . . Short Special Surveillance
4	0 0100	PC: 3	RR: 5	DL: 3	SD: 16		AP: 24	. . . Surveillance, Altitude Request
5	0 0101	PC: 3	RR: 5	DL: 3	SD: 16		AP: 24	. . . Surveillance, Identity Request
11	0 1011	PR: 4	IC: 4	CL: 3	- 16 -		AP: 24	. . . Mode S-Only All-Call

Figure 2-7: Level 1 Transponder: Uplink Formats

Format #	DF							
0	0 0000	VS: 1	- 7 -	RI: 4	- 2 -	AC: 13	AP: 24	. . . Short Special Surveillance
4	0 0100	FS: 3	DR: 5	UM: 6		AC: 13	AP: 24	. . . Surveillance, Altitude Reply
5	0 0101	FS: 3	DR: 5	UM: 6		ID: 13	AP: 24	. . . Surveillance, Identity Reply
11	0 1011	CA: 3	AA: 24				AP: 24	. . . All-Call Reply

Figure 2-8: Level 1 Transponder: Downlink Formats

DRAFT © 2007 RTCA, Inc.

2.2.18.2 Mode S Protocols

2.2.18.2.1 Error Protection (Figure 2-9 and Figure 2-10)

Parity check coding is used in Mode S interrogations and replies to provide protection against errors. The Mode S parity check code is defined in paragraphs a, b and c below.

On receipt of a Mode S interrogation, the Mode S transponder **shall** perform a parity check, which is an examination of the sequence of demodulated bits to determine whether it is consistent with the code structure. If the bit sequence is consistent, the parity check is passed; otherwise it is failed. In this event the interrogation **shall** not be accepted.

Similarly, the Mode S transponder **shall** encode prior to transmitting a reply or squitter so that these transmissions are consistent with the code structure.

a. Parity Check Sequence – A sequence of 24 parity check bits, generated by a code described in b, is incorporated into the field formed by the last 24 bits of a11 Mode S transmissions. The 24 parity check bits are combined with either the address or the interrogator identification as described in c. The resulting combination then forms either the AP (Address/Parity) or the PI (Parity/Identification) field.

b. Parity Check Sequence Generation – The sequence of 24 parity bits (P_1, P_2, . . . P_{24}) is generated from the sequence of information bits (m_1, m_2, . . . m_k) where k is 32 or 88 for short or long transmissions respectively. This is done by means of a code generated by the polynomial:

$$G(x)= \sum_{i=0}^{24} g_i x^i$$

where g_i = 1 for i = 0, 3, 10 and 12 through 24.
0 otherwise

When by the application of binary polynomial algebra the above G(x) is divided into $[M(x)]x^{24}$ where the information sequence M(x) is expressed as:

$$M(x) = m_k + m_{k-1}x + m_{k-2}x^2 + . . . + m_1x^{k-1}$$

the result is a quotient and a remainder R(x) of degree <24. The bit sequence formed by this remainder **shall** be the parity check sequence. Parity bit p_i for any i from 1 to 24, is the coefficient of x^{24-i}in R(x).

Note: *The effect of multiplying M(x) by x^{24} is to append 24 ZERO bits to the end of the sequence.*

c. AP or PI Field Generation – The address used for AP field generation is either the discrete address (§2.2.18.2.2.a) or the All-Call address (§2.2.18.2.2.b). The address **shall** be a sequence of 24 bits, (a_1, a_2 . . . a_{24}) In the discrete address, a_1

shall be the bit transmitted first in the AA field of an All-Call reply. This address sequence **shall** be used in the downlink Address/Parity field generation, while a modified form of this sequence (b_1, b_2 . . . b_{24}) **shall** be used for uplink Address/Parity field generation.

The interrogator identifier used for PI field generation is formed by a sequence of 24 bits, (a_1, a_2, . . . a_{24}) where the first 17 bits have ZERO value and the last seven bits are a replica of the CL and CI fields (see §2.2.14.4.30).

Bit b_i is the coefficient of x^{48-i} in the polynomial G(x)A(x), where:

$$A(x) = a_1x^{23} + a_2x^{22} + \ldots + a_{24}$$

and

G(x) is defined in 2.2.16.2.1 b.

The sequence of bits transmitted in the AP or PI field is:

$$t_{k+1}, t_{k+2} \ldots t_{k+24}$$

The bits are numbered in order of transmission, starting with k+1.

In interrogations

$$t_{k+i} = b_i \otimes P_i$$

where "⊗" prescribes modulo-2 addition; i = 1 is the first bit transmitted in the AP field.

In replies and squitters

$$t_{k+i} = a_i \otimes P_i$$

where "⊗" prescribes modulo-2 addition; i = 1 is the first bit transmitted in AP or PI field.

Note: *Figure 2-9 and Figure 2-10 show typical implementations of the error protection circuits and a sample of bit patterns.*

DRAFT © 2007 RTCA, Inc.

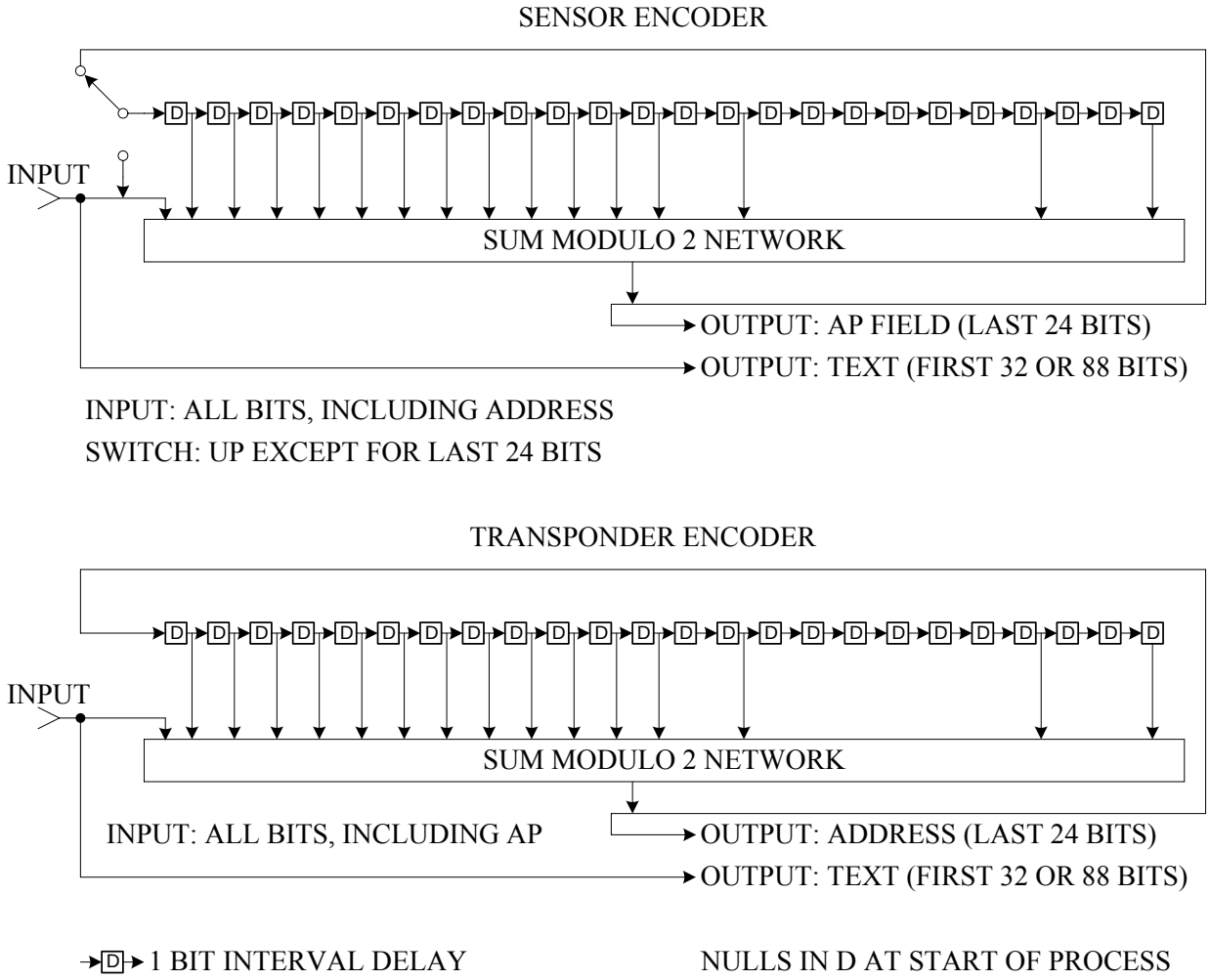

Figure 2-9: Functional Diagram of Uplink Coding

DRAFT © 2007 RTCA, Inc.

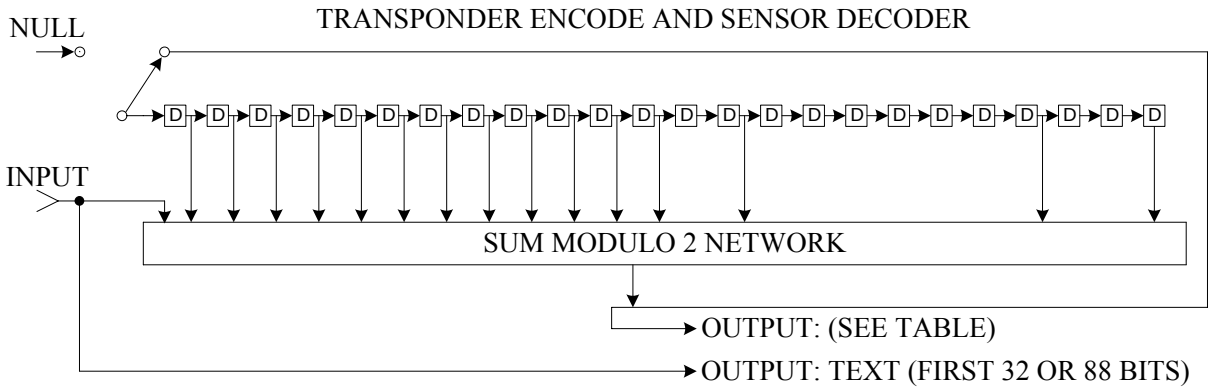

	TRANSPONDER	SENSOR
INPUT	ALL BITS, INCLUDING ADDRESS	ALL BITS INCLUDING AP FIELD
OUTPUT	AP FILED = LAST 24 BITS	ADDRESS = LAST 24 BITS
SWITCH	RIGHT EXCEPT FOR LAST 24 BITS	

→D→ 1 BIT INTERVAL DELAY NULLS IN D AT START OF PROCESS

Figure 2-10: Functional Diagram of Downlink Coding

2.2.18.2.2 Interrogation Acceptance Protocol (Figure 2-11)

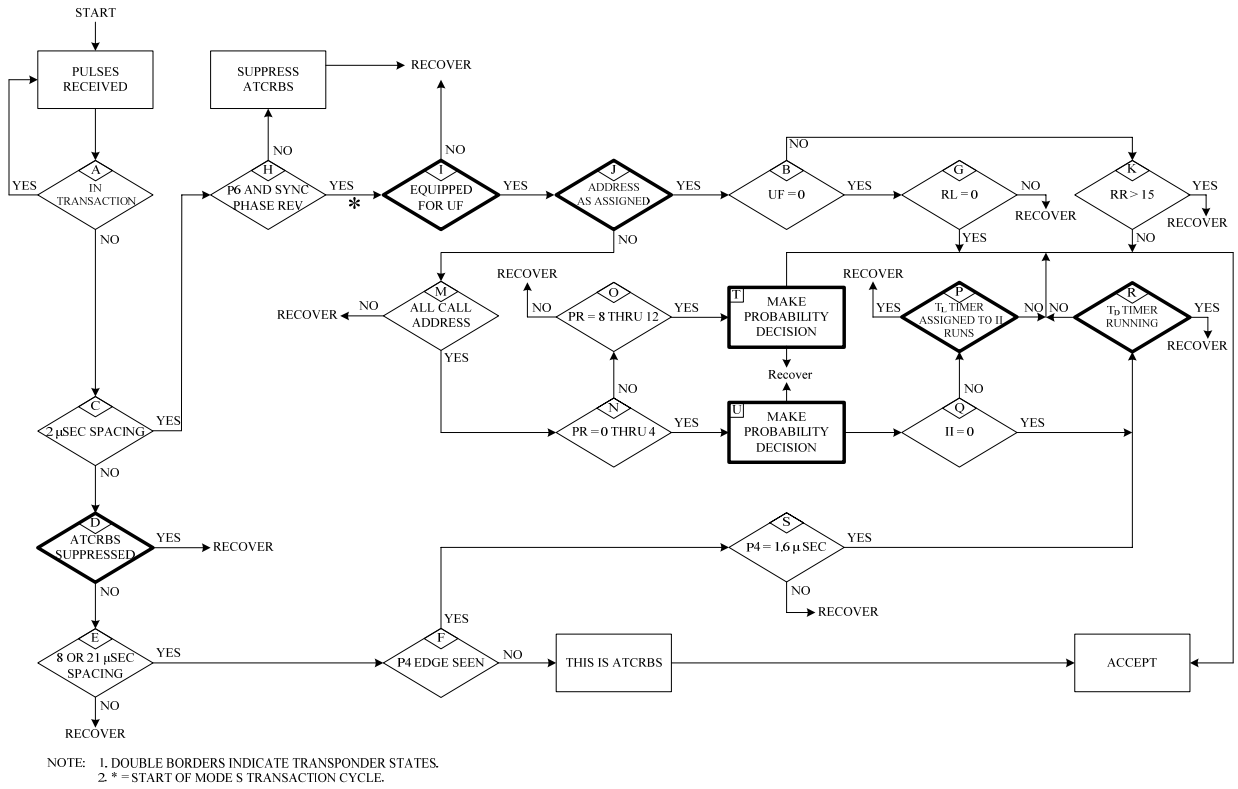

Figure 2-11: The Level 1 Transponder: Interrogation Acceptance

DRAFT © 2007 RTCA, Inc.

Mode S interrogations **shall** be accepted only if the address of the recipient is as defined in "a" or "b" below:

a. Discrete Address – The interrogation **shall** be accepted if the address extracted from the received interrogation is identical to the transponder's address and UF is not equal to 11.

b. All-Call Address – If the address extracted from the received interrogation consists of 24 ONEs and UF=11, the transmission is a Mode S-Only All-Call and the received interrogation **shall** be accepted according to i below unless the lockout protocol is in effect.

c. ATCRBS/Mode S All-Call – An ATCRBS/Mode S All-Call interrogation (1.6 microseconds P_4) **shall** be accepted unless the T_D timer is running or side lobe suppression is in effect.

d. ATCRBS-Only All-Call – A Mode S transponder **shall** not accept the ATCRBS-Only All-Call (0.8 microsecond P_4).

e. Lack of Reply Capability – The transponder **shall** not accept Mode S interrogations UF=4 or UF=5 if the code in the RR field is larger than 15.

f. Side Lobe Suppression – Suppression as described in §2.2.5.1 **shall** apply to responses to ATCRBS and ATCRBS/Mode S All-Call interrogations.

g. All-Call Lockout Conditions – On receipt of a Mode S-Only All-Call (UF=11) containing II corresponding to the designator of a running T_L timer, the interrogation **shall** not be accepted unless the contained PR code is 8 through 12. Upon receipt of a Mode S-Only All-Call (UF=11) containing II=0, the interrogation **shall** be accepted if the T_D timer is not running or if the received PR code is 8 through 12.

h. Formats for Which Transponder Is Not Equipped – The transponder **shall** not accept a Mode S format for which it is not equipped.

i. Stochastic All-Calls – Upon receipt of a Mode S-Only All-Call with a PR (§2.2.14.4.31) code other than 0 or 8, the transponder **shall** execute a random process. If the reply probability indicated by the outcome of the random process is less than or equal to the reply probability indicated by the value of PR and if no lockout condition applies (includes override, §2.2.18.2.4) the transponder **shall** accept the interrogation.

   If the value of PR is 5 through 7 or 13 through 15, the interrogation **shall** not be accepted.

j. Mode S Reply Rate Limiting – Mode S interrogations **shall** not be accepted if the optional Mode S reply rate limit is exceeded.

k. Transaction Cycle – If the transponder is in a transaction cycle, it **shall** not accept interrogations.

DRAFT © 2007 RTCA, Inc.

The transaction cycle begins when the transponder has recognized an interrogation type and ends when the transponder has finished the reply or has aborted processing this interrogation.

Note: *A Mode S interrogation is recognized when the sync phase reversal has been detected. The transaction cycle ends when either the interrogation has been accepted and has been replied to, or when the interrogation has not been accepted because of wrong address, lockout, etc. An ATCRBS interrogation is recognized when a proper P_1- P_3 interval has been detected and a following leading edge of a P_4 has not been detected. During ATCRBS suppression intervals recognition of P_1 - P_2 - P_3 intervals is suspended. In the interval between P_1 and an expected P_3, a transponder is not in a transaction cycle.*

2.2.18.2.3 Interrogation Reply Coordination

The transponder **shall** generate replies as follows:

Interrogations	**Replies**
ATCRBS Mode A	4096 Codes
ATCRBS Mode C	Altitude Codes
ATCRBS Mode A/Mode S All-Call	Reply is DF=11
ATCRBS Mode C/Mode S All-Call	Reply is DF=11

For all Mode S interrogations the reply format number (DF) **shall** be the same as the interrogation format number (UF).

2.2.18.2.4 Lockout Protocol (Figure 2-12)

Transponders can be prevented from accepting certain interrogations by command from an interrogator.

Non-Selective All-Call Lockout – On acceptance of an interrogation containing code 1 in the PC field or containing LOS=1 together with IIS=0 in the SD field or both of these code sets, the transponder **shall** start the T_D timer. This timer **shall** run for 18 ±1.0 seconds after the last received command.

DRAFT © 2007 RTCA, Inc.

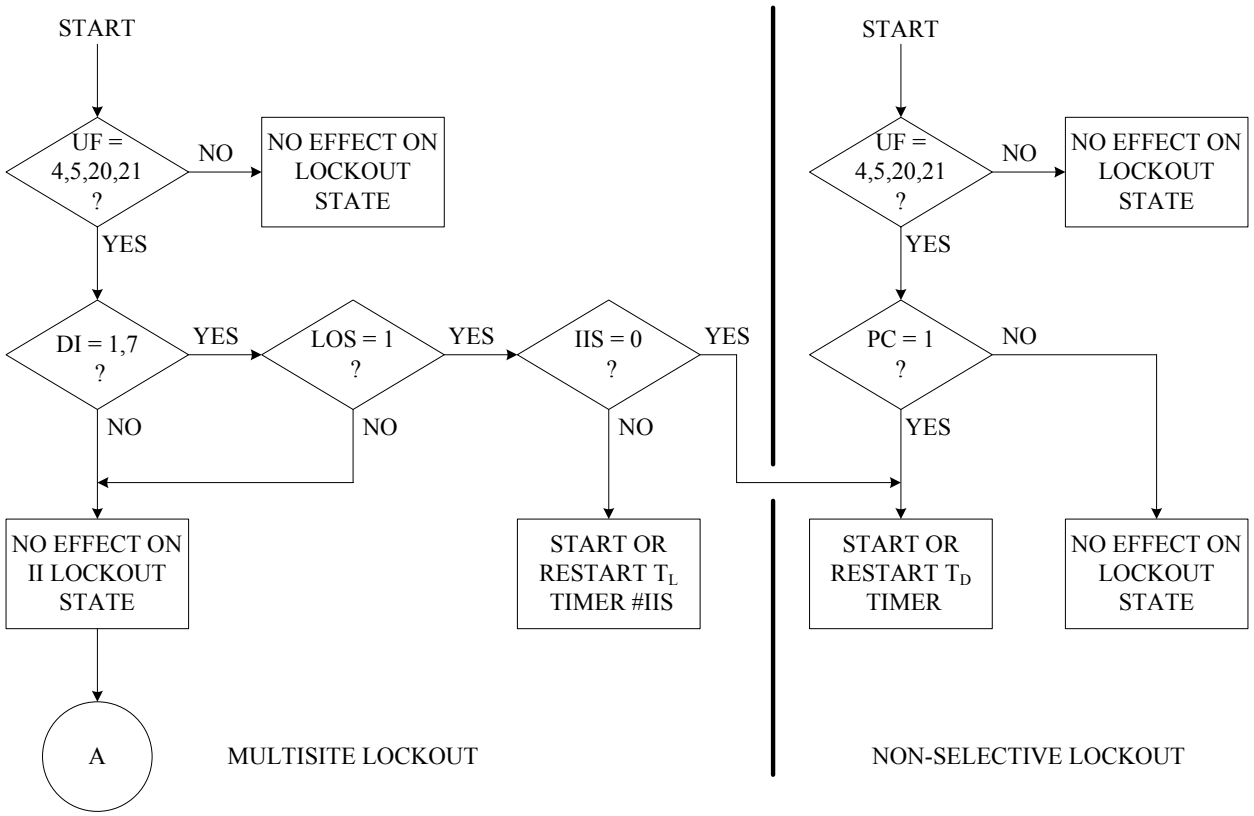

Note: For actions of T_D – T_L and IIS, see acceptance protocol.

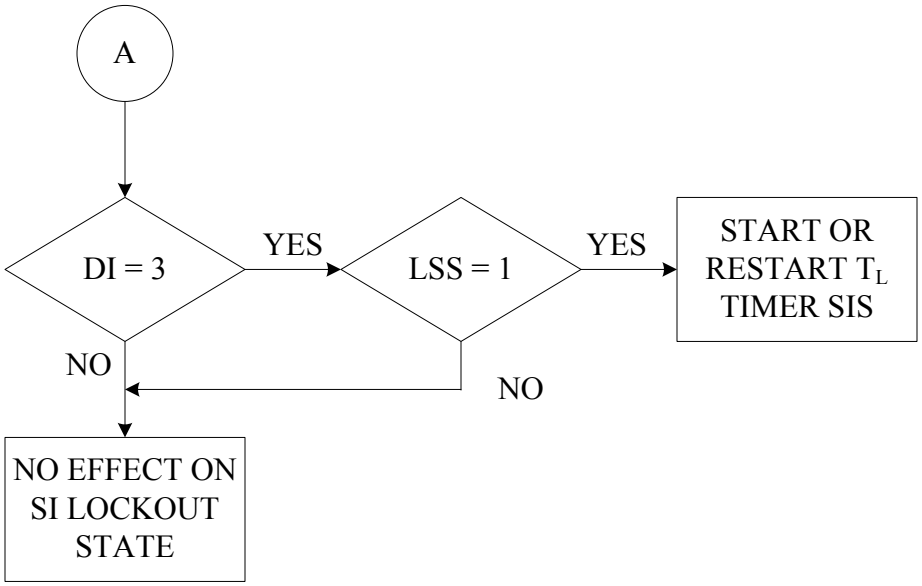

Figure 2-12: All Transponders: Lockout Initiation

2.2.18.2.5 Multisite Lockout Protocol (Figure 2-12)

The multisite lockout command **shall** be transmitted in the SD field (§2.2.14.4.36). A lockout command for an II code **shall** be transmitted in an SD with DI=1 or DI=7. An II lockout command **shall** be indicated by LOS equals ONE in the presence of a non-zero interrogator identifier in the IIS subfield of SD. A lockout command for an SI code **shall** be transmitted in an SD with DI=3. An SI lockout **shall** be indicated by LSS

(§2.2.19.2.1.1) equals ONE in the presence of a non-zero interrogator identifier in the SIS subfield of SD (§2.2.19.2.1). After a transponder has accepted an interrogation containing a multisite lockout command, that transponder **shall** commence to lock out (i.e., not accept) any Mode S-only All-Call interrogation which includes the identifier of the interrogator that commanded the lockout. The lockout **shall** persist for an interval 18 ±1 seconds after the last acceptance of an interrogation containing the multisite lockout command. Multisite lockout **shall** not prevent acceptance of a Mode S-only All-Call interrogation containing PR codes 8 to 12. If a lockout command (LOS=1) is received together with IIS=0, it **shall** be interpreted as a non-selective all-call lockout

Notes:

1. *Fifteen interrogators can send independent multisite II lockout commands. In addition, sixty-three interrogators can send independent SI lockout commands. Each of these lockout commands must be timed separately.*

2. *Multisite lockout (which uses only non-zero II codes) does not affect the response of the transponder to a Mode S-only All-Call interrogation containing II equals 0 or to Mode A/C/S All-Call interrogations.*

2.2.18.2.6 Acquisition Squitter Protocols

Mode S transponders **shall** transmit Acquisition squitters to facilitate acquisition.

a. Acquisition Squitter Format – The format used for the acquisition squitter transmissions **shall** be the All-Call reply, DF=11 using II=0 and SI=0 in generating the PI field.

b. Squitter Rate – Acquisition squitter transmissions **shall** be emitted at random intervals that are uniformly distributed over the range from 0.8 to 1.2 seconds using a time quantization no greater than 15 milliseconds relative to the previous acquisition squitter, with the following exceptions:

(1) The scheduled acquisition squitter **shall** be delayed if a mutual suppression interface is active.

Note: *A mutual suppression system may be used to connect on-board equipment operating in the same frequency band in order to prevent mutual interference. Squitter action resumes as soon as practical after a mutual suppression interval.*

(2) The scheduled acquisition squitter **shall** be delayed if the transponder is in a transaction cycle (see §2.2.18.2.2.k.).

(3) The scheduled acquisition squitter **shall** be delayed if an Extended Squitter is in process.

(4) Acquisition squitters **shall** only be transmitted when in the on-the-ground state if the transponder is not reporting the surface position type of Mode S Extended Squitter or as specified in subparagraph c.

An acquisition squitter **shall** not be interrupted by link transactions after the squitter transmission has begun. A delayed acquisition squitter **shall** be transmitted as soon as the condition causing the delay no longer exists.

DRAFT © 2007 RTCA, Inc.

c. Conditions for Acquisition Squitter Transmission –When commanded to report the surface position format by TCS commands (see §2.2.23.1.7), aircraft without automatic means of determining the on-the-ground condition, and aircraft with such means that are reporting airborne state, **shall** transmit acquisition squitters in addition to the surface position Extended Squitters unless acquisition squitter transmission has been inhibited (subparagraph d.)

Note 1: *This action is taken to ensure TCAS acquisition in the event that the ground station inadvertently commands an airborne aircraft to report the surface position type of Extended Squitter.*

If aircraft are commanded to stop emitting surface position Extended Squitters by RCS command equal to 3 or 4 (see §2.2.23.1.7), these aircraft **shall** begin to emit the acquisition squitter (if not already doing so).

Note 2: *This will reduce the squitter rate from two Extended Squitters per second to one acquisition squitter per second.*

Note 3: *A summary of the acquisition squitter transmission conditions is presented in the following table. In this table, Y indicates that the acquisition squitter is regularly broadcast, and N means that the acquisition squitter is suppressed.*

Note 4: *The condition of no transmission of any Extended Squitter can result from (1) initialization with no position, velocity, or identity data available, or (2) a surface squitter lockout command while reporting the surface position type of Extended Squitter.*

Table 2.2.16-1: Acquisition Squitter Transmission Requirements

		Aircraft On-The-Ground Condition		
		Airborne	**Surface**	**Airborne or Surface**
Acquisition Squitter NOT Inhibited	No transmission of any Surveillance Type Extended Squitter	Y	Y	Y
	At Least on Surveillance Type Extended Squitter Transmitted	Y	N	Y
	Reporting Surface Format	Y	N	Y
Acquisition Squitter Inhibited	No transmission of any Surveillance Type Extended Squitter	Y	Y	Y
	At Least on Surveillance Type Extended Squitter Transmitted	N	N	N
	Reporting Surface Format	N	N	N

Notes:

1. *Y = regular transmission of acquisition squitters*
2. *N = acquisition squitter suppressed*
3. *Surveillance type Extended Squitters are airborne position, airborne velocity or surface position Extended Squitters*

d. Future Suppression of Regular Transmission of Acquisition Squitter Transponders equipped for Extended Squitter operation should have a means to disable acquisition squitters when Extended Squitters are being emitted. After

DRAFT © 2007 RTCA, Inc.

regular acquisition squitter suppression has been implemented, the acquisition squitter **shall** continue to be broadcast by transponders if they are not emitting any Extended Squitters.

Notes:

1. *Provision of this means will facilitate the suppression of acquisition squitters when all TCAS units have been converted to receive the Extended Squitter.*
2. *Broadcast of acquisition squitters when no Extended Squitter is broadcast is necessary in order to ensure acquisition by TCAS.*
3. *A TCAS will need to retain the ability to receive the acquisition squitter even after that TCAS has been converted to receive the Extended Squitter.*

2.2.18.2.7 Flight Status and Vertical Status Protocols (Figure 2-13)

Mode S-equipped aircraft **shall** report details of their flight status. The source of and the rules for such reports are as follows:

a. Alert – The transponder **shall** transmit the 4096 identification code in ATCRBS Mode A replies and in the ID field of downlink format DF=5. This code can be changed by the pilot, and when a change is made an alert condition **shall** be established. If the identification code is changed to 7500, 7600 or 7700, the alert condition **shall** be permanent. If the identification code is changed to any other value, the alert condition **shall** be temporary and self-canceling after 18 ±1 seconds (T_C timer). The T_C timer shall be retriggered and continued for T_C seconds after any change has been accepted by the transponder function. The alert condition **shall** be reported in the FS field. The permanent alert condition **shall** be terminated and replaced by a temporary alert condition when the identification code is set to a value other than 7500, 7600 or 7700.

Note 1: *Retriggering is performed to ensure that the ground interrogator obtains the desired Mode 3/A code before the alert condition is cleared.*

b. On-the-Ground Report – The on-the-ground status of the aircraft **shall** be reported in the FS field and the VS field and the CA field. If a means for automatically indicating the on-the-ground condition (*e.g.,* a weight on wheels or strut switch) is available at the transponder data interface, it **shall** be used as the basis for the reporting of vertical status. If a means for automatically indicating the on-the-ground condition is not available at the transponder data interface, the FS and VS codes **shall** indicate that the aircraft is airborne and the CA field **shall** indicate that the aircraft is either airborne or on the ground (CA=6).

c. Validation of declared on-the-ground status

Note 2: *For aircraft with an automatic means of determining vertical status, the CA field reports whether the aircraft is airborne or on the ground. ACAS II acquires aircraft using the short or Extended Squitter, both of which contain the CA field. If an aircraft reports on-the-ground status, that aircraft will not be interrogated by ACAS II in order to reduce unnecessary interrogation activity. If the*

aircraft is equipped to report Extended Squitter messages, the function that formats these messages may have information available to validate that an aircraft reporting "on-the-ground" is actually airborne.

Aircraft with an automatic means for determining the on-the-ground condition that are equipped to format Extended Squitter messages **shall** perform the following validation check:

If the automatically-determined air/ground status is not available or is "airborne", no validation **shall** be performed. If the automatically-determined air/ground status is available and "on-the-ground" condition is being reported, the air/ground status **shall** be overridden and changed to "airborne" if the conditions given for the vehicle category in the following table are satisfied.

Determination of airborne status					
A/V category	**Ground Speed (knots)**		**Airspeed (knots)**		**Radio Altitude (feet)**
No information	No change to on-the-ground status				
Weight < 15,500 lbs (7,031 kg)	No change to on-the-ground status				
Weight 15,500 lbs (7,031 kg)	>100	**or**	>100	**or**	>50
High performance (>5 g acceleration and >400 knots)	>100	**or**	>100	**or**	>50
Rotorcraft	No change to on-the-ground status				

Note 3: *While this test is only required for aircraft that are equipped to format Extended Squitter messages, this feature is desirable for all aircraft.*

d. Special Position Identification – When manually selected, the transponder **shall** transmit the equivalent of the ATCRBS SPI in the FS field of surveillance replies DF=4,5 and in the Surveillance Status Subfield (see §2.2.23.1.8) of Extended Squitter transmissions (DF=17) when they contain the airborne position report. This code **shall** be transmitted for 18 ±1 seconds (T_I timer) after initiation and can be reinitiated at any time.

2.2.18.2.8 Capability Reporting

The transponder **shall** transmit a "0" value in the three-bit CA (capability) field of an All-Call (DF=11) reply.

2.2.18.2.9 All-Call Reply Protocol

Upon acceptance of a Mode S-Only All-Call interrogation (UF=11) the transponder **shall** reply by overlaying the received II or SI code on parity according to §2.2.18.2.1, resulting in the PI field which **shall** be used in the reply (DF=11). Upon acceptance of an

DRAFT © 2007 RTCA, Inc.

ATCRBS/Mode S All-Call interrogations the transponder **shall** generate the PI field using II=0.

2.2.18.2.10 Reply Content (Figure 2-14)

The information content of a Mode S reply **shall** reflect the conditions existing in the transponder after completion of all transponder processing of the interrogation soliciting that reply.

In the reply to UF=0, the transponder **shall** insert:

VS in bit 6.
RI in bits 14 to 17.
AC in bits 20 to 32.

In the reply to UF=4, AC **shall** be in bits 20 to 32. In the reply to UF=5, ID **shall** be in bits 20 to 32. In the reply to UF=11, AA **shall** be in bits 9 to 32.

In replies to UF=4 and UF=5, the transponder **shall** insert ZEROs in bits 9 through 13 in the DR field.

2.2.18.2.11 Data Handling and Interfaces

The transponder **shall** have the following data interfaces as described in §2.2.13:

Mode S Discrete Address (AA)
Maximum Airspeed (RI)
Pressure Altitude (AC)
4096 Identification Code (ID)
On-the-Ground Condition (FS, VS, CA)
Special Position Indicator (FS)

2.2.19 Minimum Level 2 Transponder Description

An overview of data link uses appears in §1.4.4. The following subparagraphs "a" through "g" provide a general description of data link transponders.

a. Formats

Messages appear in dedicated fields (MA, MB, MC, etc.) of some Mode S formats.

b. Participants

Uplink messages are generally directed to the pilot's attention. Downlink messages can be readouts of on-board data which do not need pilot intervention or can be messages deliberately sent by the pilot. ("Pilot" is to be understood as any of the flight deck crew.)

DRAFT © 2007 RTCA, Inc.

c. Peripherals

Peripherals, also called I/O devices, process and store messages received and/or to be transmitted. They translate received messages into visual or aural form, and messages to be transmitted, into agreed-upon binary coding. Peripherals can be contained within the transponder enclosure or can be separated from the transponder.

d. Interfaces

If peripheral separation as mentioned above is used, interfaces (see §2.2.13) **shall** be part of the transponder design.

e. Message Content, Specified

This document specifies message content only for standardized messages which have their data base within the transponder. These are the data link capability report (BDS 1,0) and the aircraft identification report (BDS 2,0) using Comm-B, and the transmission and acknowledgment subfields of the downlink ELM protocol (see §2.2.19.1.12.5, §2.2.19.1.13 and §2.2.20.1.1.1.6)

f. Message Content, NOT Specified

Message structure and coding for various data link applications will be found in the documents describing those services.

g. Protocol Overview

Data exchanges are always under control of the interrogator. Comm-A messages are sent directly to the transponder. Ground-initiated Comm-B replies are extracted from the transponder by suitable interrogation content. Air-initiated Comm-B messages are announced by the transponder and are transmitted in a subsequent reply only after authorization by the interrogator. Longer messages, either on the uplink or downlink, can be exchanged by the ELM protocol using Comm-C and Comm-D formats. The ELM protocol provides for the interrogator transmission of up to sixteen 112-bit message segments before requiring a reply from the transponder. It also allows a corresponding procedure for downlink ELM transmission.

Air-initiated Comm-B messages are announced to all interrogators and can be extracted by any interrogator. However, an individual interrogator can use the multisite protocol to reserve for itself the ability to close out (cancel) the Comm-B transaction. A similar coordination technique applies to the ELM protocol. A transponder can be instructed to identify the interrogator that has reserved the transponder for an ELM transaction. Only that interrogator can terminate the ELM transaction.

DRAFT © 2007 RTCA, Inc.

2.2.19.1 Minimum Level 2 Transponder Requirements

The operational functions described in §1.4.3.b require that this transponder **shall**, in addition to the functions of the Level 1 transponder:

a. Process uplink and downlink formats UF=DF=16, 20 and 21 (Figure 2-15). The formats UF=DF=16 are optional.

b. Receive broadcast transmissions from sensors (§2.2.19.1.11).

c. Follow the protocols for:

Comm-A (see §2.2.19.1.10).
Comm-B (see §2.2.19.1.12).
Comm-U/V (air-air) (see §2.2.19.1.16) (optional).
Multisite message operation (see §2.2.19.2).

Uplink Formats

Format #	UF							
0	0 0000	- 3 -	RL: 1	- 4 -	AQ: 1	BD: 8	- 10 -	AP: 24	. . . Short Special Surveillance
4	0 0100	PC: 3	RR: 5	DI: 3	SD: 16	AP: 24			. . . Surveillance. Altitude Request
5	0 0101	PC: 3	RR: 5	DI: 3	SD: 16	AP: 24			. . . Surveillance, Identity Request
11	0 1011	PR: 4	IC: 4	CL: 3	- 16 -	AP: 24			. . . Mode S-Only All-Call
16	1 0000	- 3 -	RL: 1	- 4 -	AQ: 1	- 18 -	MU: 56	AP: 24	. . . Long Special Surveillance
20	1 0100	PC: 3	RR: 5	DI: 3	SD: 16	MA: 56	AP: 24		. . . Comm-A, Altitude Request
21	1 0101	PC: 3	RR: 5	DI: 3	SD: 16	MA: 56	AP: 24		. . . Comm-A, Identity Request

DRAFT © 2007 RTCA, Inc.

Downlink Formats

Format #	DF										
0	0 0000	VS: 1	CC: 1	-1-	SL: 3	-2-	RI: 4	-2-	AC: 13	AP: 24	. . . Short Special Surveillance
4	0 0100	FS: 3	DR: 5	UM: 6	AC: 13	AP: 24					. . . Surveillance. Altitude
5	0 0101	FS: 3	DR: 5	UM: 6	ID: 13	AP: 24					. . . Surveillance, Identity
11	0 1011	CA: 3	AA: 24	PI: 24							. . . All-Call Reply
16	1 0000	VS: 1	-2-	SL: 3	-2-	RI: 4	-2-	AC: 13	MV: 56	AP: 24	. . . Long Special Surveillance
17	1 0001	CA: 3	AA: 24	ME: 56	AP: 24						. . . Extended Squitter
20	1 0100	FS: 3	DR: 5	UM: 6	AC: 13	MB: 56	AP: 24				. . . Comm-B, Altitude
21	1 0101	FS: 3	DR: 5	UM: 6	ID: 16	MB: 56	AP: 24				. . . Comm-B, Identity

Figure 2-15: All Level 2 Transponders: Formats

Notes:

1. *Uplink and downlink formats 16 are used in TCAS applications.*

2. *The PC, RR, DL and SD fields do not apply to a Comm-A Broadcast Interrogation.*

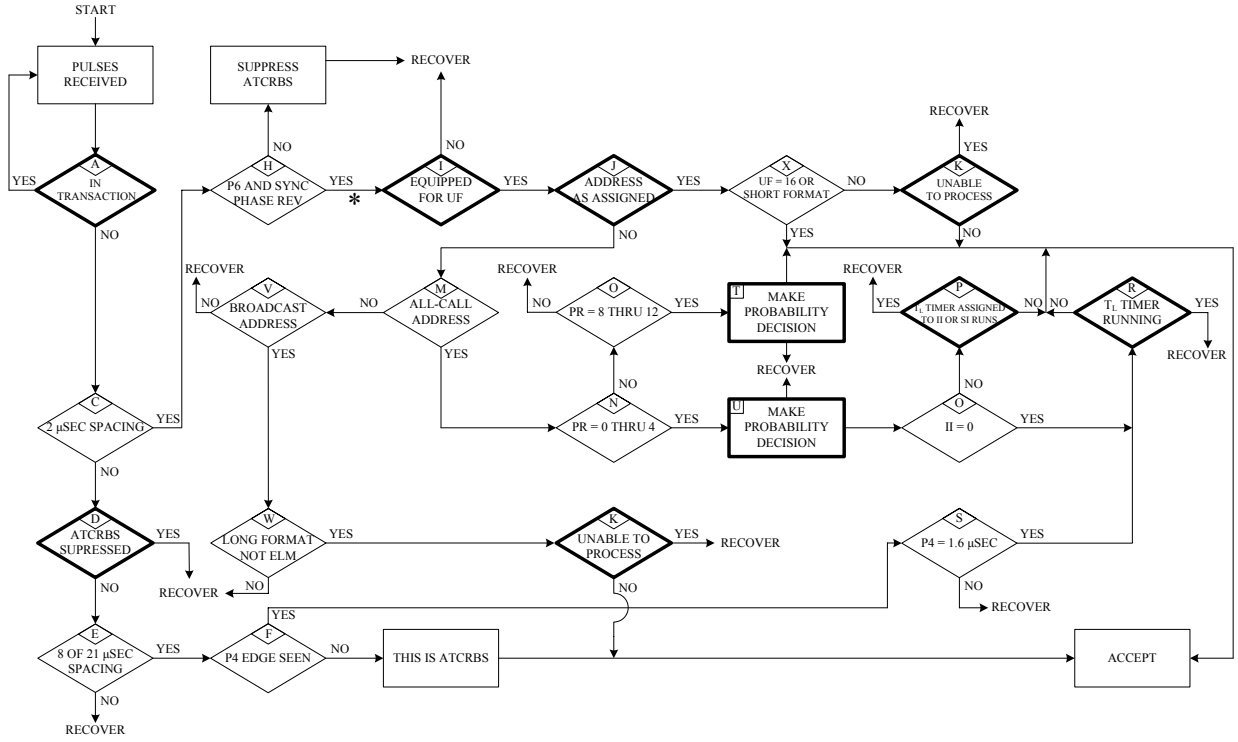

NOTE: 1. BOLD BORDERS INDICATE TRANSPONDER STATUS.
2. * = START OF MODE S TRANSACTION CYCLE.

Figure 2-16: Data Link Transponders: Interrogation Acceptance

2.2.19.1.1 Interrogation Acceptance Protocol (Figure 2-16)

The interrogation acceptance protocol of §2.2.18.2.2 **shall** be used with the following additions:

a. An interrogation **shall not** be accepted if the corresponding data buffer (see §2.2.13.3.1) is full.

b. An interrogation **shall** be accepted as a "broadcast" if the UF format code is 20, 21 or 16 (if so equipped), and if an ALL ONEs address is decoded.

c. Only formats for which the transponder is designed, and to which it can reply, **shall** be accepted.

2.2.19.1.2 Error Protection

The parity algorithm described in §2.2.18.2.1 **shall** be expanded to include 112-bit transmissions.

2.2.19.1.3 Information Transfer

The minimum Level 2 transponder **shall** be able to transfer information to and from the appropriate data sinks (destinations) and sources (see §2.2.13 and §2.2.19.c and §2.2.19.d).

2.2.19.1.4 Interrogation-Reply Coordination (Figure 2-17)

The transponder **shall** generate replies to interrogations as follows:

Interrogation	Reply
ATCRBS Mode A	4096 Code
ATCRBS Mode C	Altitude Code
ATCRBS/Mode S All-Calls	DF=11
UF=4 and UF=5	as below
UF=11	DF=11
UF=20 and UF=21	as below
Broadcast	None

Upon acceptance of an interrogation with UF codes 0 or 16, the transponder **shall** reply with DF=0, if RL=0, and **shall** reply with DF=16, if RL=1.

If the transponder is not equipped with the optional long air-air formats UF=DF=16, it **shall** not accept UF=16 and it **shall** not reply to UF=0 containing RL=1.

DRAFT © 2007 RTCA, Inc.

Upon acceptance of an interrogation with a UF code of 4, 5, 20 or 21, the transponder **shall** examine the RR code and generate downlink formats as follows:

Uplink Format, UF	RR Code	Downlink Format, DF
4	0 through 15	4
5	0 through 15	5
20	0 through 15	4
21	0 through 15	5
4	16 through 31	20
5	16 through 31	21
20	16 through 31	20
21	16 through 31	21
Note: *In effect, the first bit of the RR field determines the length of the required reply.*		

DRAFT © 2007 RTCA, Inc.

Interrogation UF	Special Conditions	Reply DF
0	RL = ZERO (0) RL = 1	0 16*
4	RR less than 16 RR equal to or greater than 16	4 20
5	RR less than 16 RR equal to or greater than 16	5 21
11	Transponder locked out to interrogator identifier II or SI Stochastic reply test fails Otherwise	No reply No reply 11
16	RL = ZERO (0) RL = 1 Broadcast Address	0 16* No reply
20	RR less than 16 RR equal to or greater than 16 Broadcast Address	4 20 No reply
21	RR less than 16 RR equal to or greater than 16 Broadcast Address	5 21 No reply
24	RC = 0 or 1 RC = 2 RC = 3	No reply 24 Multiple 24's
others		Not Assigned

*No reply if transponder is not equipped to send DF=16

A broadcast address consists of 24 ONEs in uplink formats UF=20 and UF=21 and also, if so equipped, for UF=16

Figure 2-17: All Level 2 Transponders: Coordination

DRAFT © 2007 RTCA, Inc.

2.2.19.1.5 Lockout Protocols (Figure 2-12)

Lockout commands **shall** not be accepted if they occur within a broadcast interrogation.

In addition to the rules in §2.2.18.2.4, lockout commands **shall** be accepted if they appear in interrogations UF=20 and UF=21.

2.2.19.1.6 Flight and Vertical Status Protocols (Figure 2-13)

The FS report (see §2.2.18.2.7) **shall** also appear in DF=20 and DF=21 and VS **shall** also appear in DF=16.

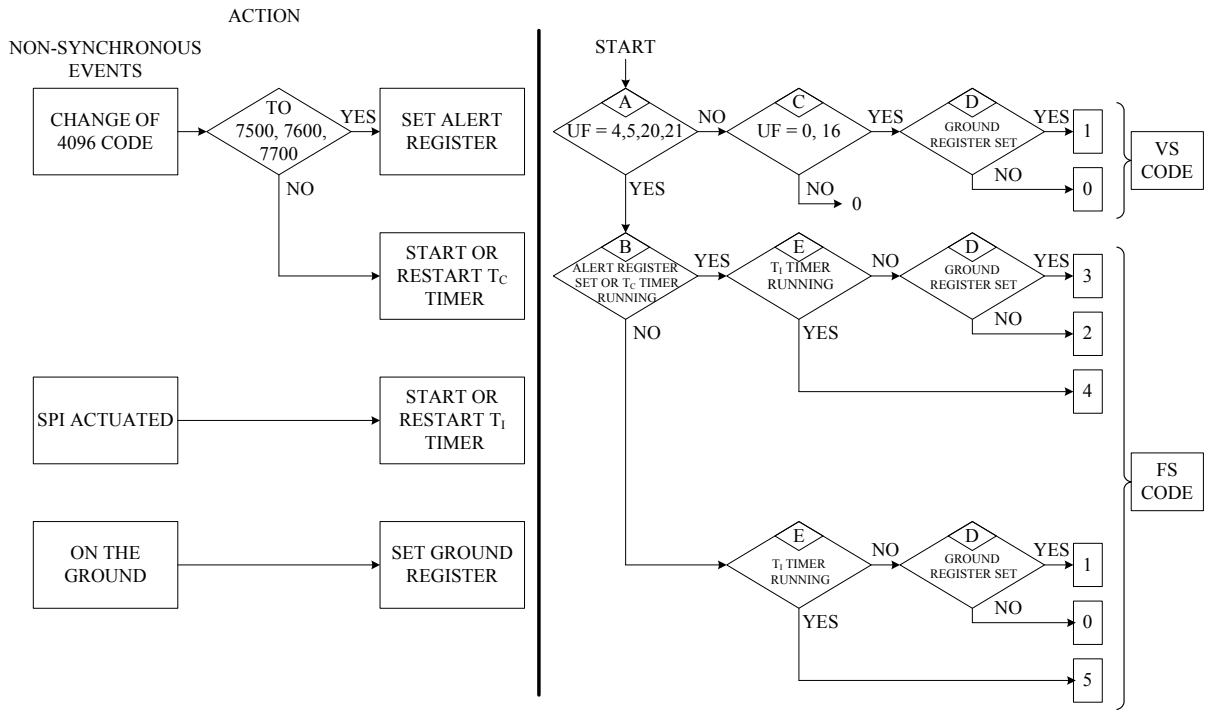

Figure 2-13: All Transponders: FS and VS Protocol

2.2.19.1.7 Capability Report

The transponder **shall** reply with a non-zero value of CA (see §2.2.14.4.6) in the capability field of DF=11 and DF=17, indicating that further data link information is available in a data link capability report (§2.2.19.1.12.5).

2.2.19.1.8 Reply Content (Figure 2-14)

The reply content summary of §2.2.18.2.10 **shall** apply. Additionally, the rules applying to formats UF=4, UF=5 **shall** also apply to formats UF=20 and UF=21 respectively.

DRAFT © 2007 RTCA, Inc.

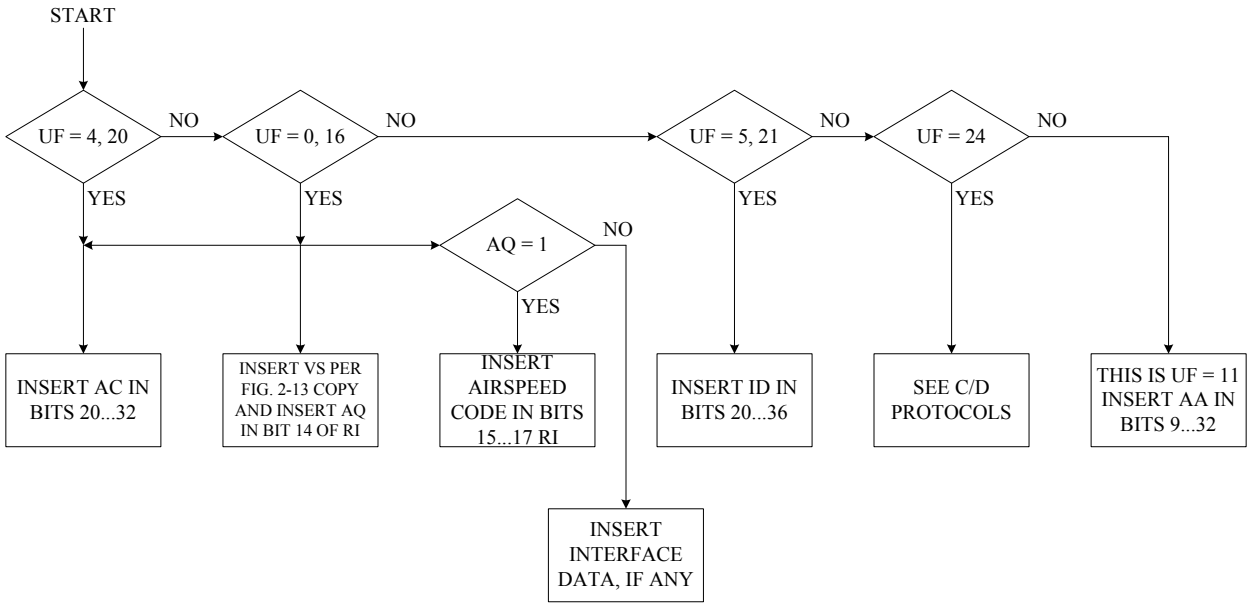

Figure 2-14: All Transponders: Reply Content

2.2.19.1.9 UM Protocol (Figure 2-18)

The UM field **shall** support functions for the multisite protocol. The following paragraphs contain the requirements and descriptions of the protocol.

a. Field description is in §2.2.14.4.40.

b. If DI=1, multisite information may be requested as specified in §2.2.19.2.1.2.

c. If no request appears, direct Comm-B/D information may appear in UM as specified in §2.2.19.2.3.2 and §2.2.20.2.3.2.

DRAFT © 2007 RTCA, Inc.

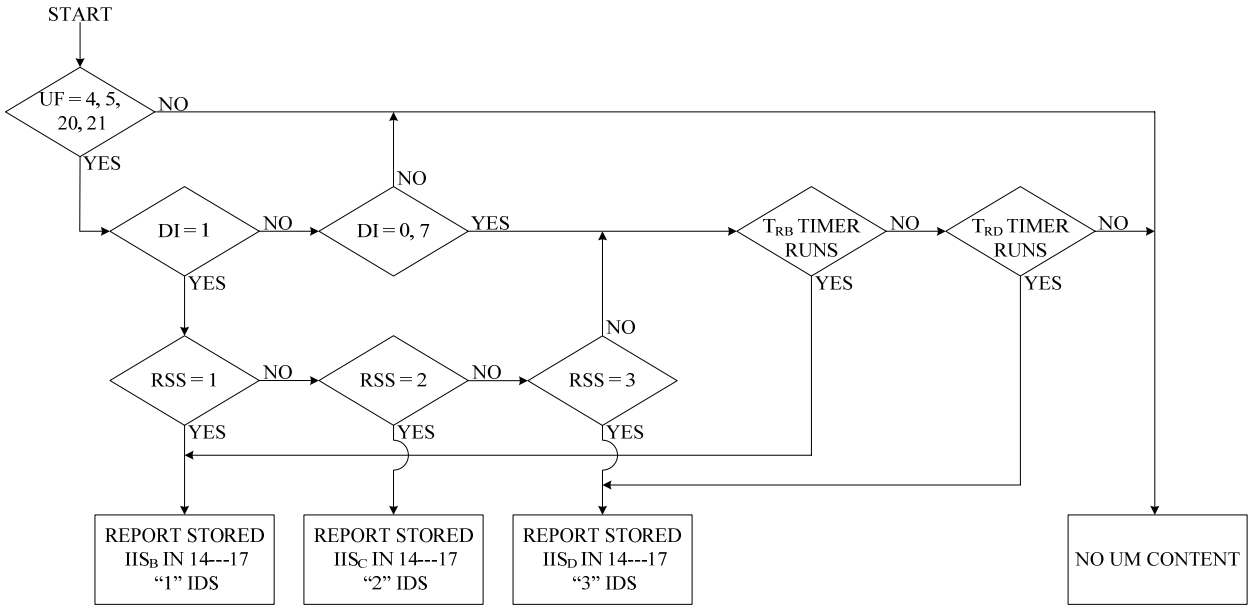

Figure 2-18: All Level 2 Transponders: UM Protocol

2.2.19.1.10 Comm-A Protocol

Comm-A is the transmission of information from the ground to the aircraft by formats UF=20, 21. In addition to the content of the corresponding short formats (UF=4, 5) the Comm-A formats contain the additional 56-bit field MA.

The Level 2 transponder **shall** direct the content of received Comm-A formats to the interface (see §2.2.13.2).

2.2.19.1.11 Broadcast Protocol

If a broadcast interrogation has been accepted (see §2.2.18.2.2), the minimum data link transponder **shall** make that information available at the appropriate interface.

Other transponder functions **shall** not be affected, and a reply **shall** not be transmitted. The transponder does not process the control fields of a Comm-A broadcast interrogation, so the 27 bits following the UF field are also available for user data.

2.2.19.1.12 Comm-B Protocol (Figure 2-19)

Comm-B is the transmission of information from the aircraft to the ground and follows the general protocol as outlined in §2.2.19.g. Figure 2-19 is a flow chart containing the ground-initiated Comm-B readout, the procedures for air-initiated Comm-B transactions and the multisite procedures.

DRAFT © 2007 RTCA, Inc.

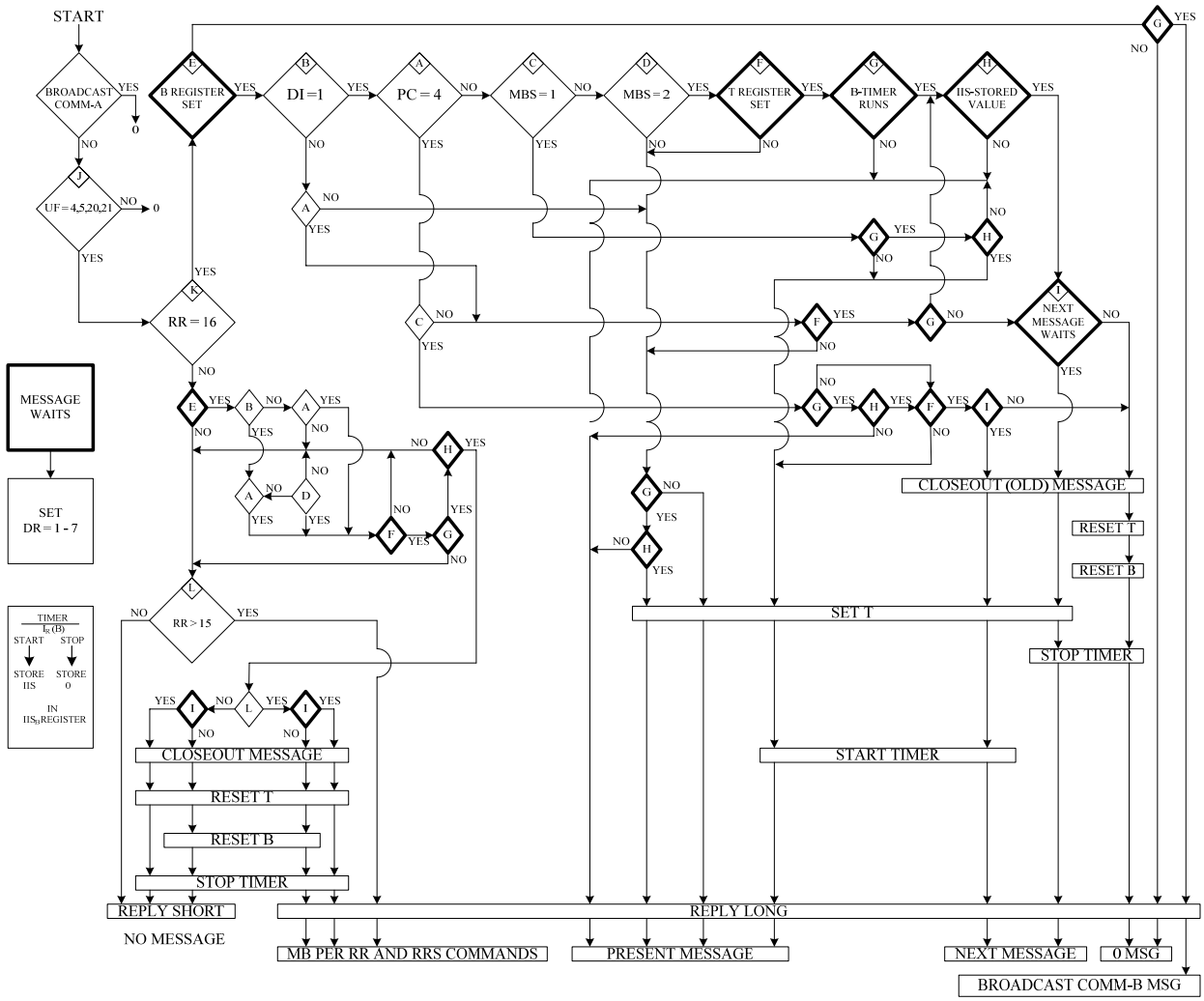

NOTE:
1. BOLD INDICATE TRANSPONDER STATES.
2. THE DECISION IN DIAMOND "K" IS "YES" ONLY IF RR=16 AND EITHER DI≠7, OR DI=7 AND RRS=0
3. "0" INDICATES TERMINATION OF THE PROCESS.
4. THE T-REGISTER (FIG. 2-23) INDICATES WHETHER THE MESSAGE HAS BEEN READ AT LEAST ONCE.
5. THE T-REGISTER IS RESET WHEN THE B-TIMER EXPIRES.
6. THE B-TIMER DOES NOT EXPIRE FOR A MULTISITE-DIRECTED COMM-B MESSAGE
7. ADDITIONAL PROCESSING FOR MULTISITE-DIRECTED COMM-B TRANSMISSIONS IS DEFINED IN 2.2.19.2.3.2
8. IIS IS ONLY DEFINED IF DI=0,1 OR 7.
9. THIS FIGURE DOES NOT INCLUDE THE ENHANCED DATA LINK PROTOCOL FEATURES.

Figure 2-19: All Data Link Transponders: B-Protocol

2.2.19.1.12.1 Data Source Designators

When Comm-B information to be transmitted resides in data sources that are part of the Mode S installation, the data sources **shall** be identified by the BDS code of §2.2.14.4.20.b. The interrogator uses the RR field of surveillance and Comm-A interrogations to designate the BDSl of the data source from which the reply should originate. BDS1 is represented by the last four bits (10-13) of the received RR code (see §2.2.14.4.35).

If the DI code of the Comm-B requesting interrogation is not equal to 7, the BDS2 code of the desired reply source **shall** be "0."

DRAFT © 2007 RTCA, Inc.

2.2.19.1.12.2 Extended Data Source Designators

The interrogator can request data to be read out from a source more specifically defined by both BDS1 and BDS2. The readout is initiated by transmitting, in addition to the BDS1 code in RR, the BDS2 code in the SD field. See §2.2.19.2.1.1 for definitions of subfields in SD.

2.2.19.1.12.3 Ground-Initiated Comm-B

To read out data aboard the aircraft, the interrogator **shall** transmit the appropriate data designators and the transponder **shall** insert the data according to §2.2.19.1.12.1 or §2.2.19.1.12.2.

2.2.19.1.12.4 Air-Initiated Comm-B

An air-initiated Comm-B sequence **shall** start upon the acceptance of a message intended for delivery to the ground sensor. After receipt of this message, the transponder **shall** insert codes 1 or 3 in the DR field of a surveillance or Comm-B reply, DF=4, 5, 20, 21. On receipt of this announcement, the interrogator transmits code 16 with DI≠7 or with DI=7 and RRS=0 in the RR field of a subsequent interrogation. Receipt of this code by the transponder **shall** constitute the authorization to transmit the data. The resulting MB field contains a code identifying the content of the field. This reply, and others following it, **shall** continue to contain codes 1 or 3 in the DR field. After the message has been transmitted at least once in response to an interrogation using non-selective protocols (see §2.2.17.2.3.4) and after closeout is received (Code 4 in the PC field) in UF=4, 5, 20, 21, the transaction **shall** be closed out and the DR code belonging to this message immediately removed. Another message waiting to be transmitted can then set the DR code to 1 or 3 so that the reply can contain the announcement of this next message. If RR=16 with DI≠7, or with DI=7 and RRS=0, is received while no message is waiting to be transmitted, the reply **shall** contain all ZEROs in the MB field.

2.2.19.1.12.4.1 Comm-B Broadcast

Note: *A Comm-B broadcast is a message directed to all active interrogators in view. Messages are alternately numbered 1, 2 and are available for 18 seconds unless a waiting air-initiated Comm-B interrupts the cycle. Interrogators have no means to cancel the Comm-B broadcast.*

A Comm-B broadcast starts, when no air-initiated Comm-B transaction is in effect, with the insertion of DR codes 4, 5, 6 or 7 into downlink transmissions of DFs 4, 5, 20, 21 and with the starting of the B-timer. On receipt of the above DR codes, interrogators may extract the broadcast message by transmitting RR=16 with DI≠7 or with DI=7 and RRS=0 in subsequent interrogations. When the B-timer runs out after 18 ±1 seconds, the transponder will reset the DR codes as required, will discard the previous broadcast message and change from 1 to 2 (or vice versa) the broadcast message number.

If an air-initiated Comm-B transaction is initiated during the broadcasting interval (i.e., while the B timer is running), the B timer is stopped and reset, the appropriate code is inserted into the DR field and the Comm-B transaction proceeds per Figure 2-19. The previous Comm-B broadcast message remains ready to be reactivated for 18 ±1 seconds after conclusion of the air-initiated Comm-B transaction.

DRAFT © 2007 RTCA, Inc.

2.2.19.1.12.5 Data Link Capability Report

The data link capability report provides the interrogator with a description of the data link capability of the Mode S installation. The subfield definitions of the Data Link Capability Report are contained in Appendix B. The report is obtained by a ground-initiated Comm-B, containing RR=17 (see §2.2.19.1.12.3).

2.2.19.1.12.6 Subfields in MB for Data Link Capability Report

The subfields within MB of the data link capability report are:

BDS1 Code "1" is assigned to this 4-bit (33-36) subfield for all data link capability reports.

BDS2 is a 4-bit (37-40) subfield. The basic report uses BDS2=0.

2.2.19.1.12.7 Coding of the Data Link Capability Report

BDS1: 1 = Data Link Report

BDS2: 0 = Basic Report

Bit 65 relates to the transponder ability to deliver AIS report with coding as follows:

Bit 65=1, AIS report available,

Bit 65=0, No AIS report available.

Note 1: *The format of the data link capability report is defined in RTCA/DO-218.*

SCS: This 1-bit squitter (bit 66) capability subfield **shall** report the capability of the transponder to transmit Extended Squitter position reports. It **shall** be set to ONE if GICB registers 05 and 06 {HEX} have been updated within the last 10 ±1 seconds. Otherwise it **shall** be set to ZERO. The internal insertion of data by the transponder into these registers (altitude and surveillance status) **shall** not qualify as a register update for this purpose.

Note 2: *GICB registers 05 and 06 {HEX} are used for the Extended Squitter airborne and surface position reports, respectively.*

SIC: This one bit (67) SI capability subfield **shall** report the capability of the transponder to process SI codes. It **shall** be set to ONE for transponders with SI code capability. Otherwise it **shall** be set to ZERO.

Other bits are reserved for TCAS (see §2.2.22.1.2.2).

DRAFT © 2007 RTCA, Inc.

2.2.19.1.12.8 Updating of the Data Link Capability Report

At intervals not exceeding four seconds, the transponder compares the current basic data link capability status with that last reported and if a difference is noted, initiates a revised basic data link capability report by Comm-B broadcast for BDS1=1 and BDS2=0.

The transponder **shall** initiate, generate and transmit the revised basic data link capability report even if the aircraft data link capability is degraded or lost. To support this requirement, the transponder **shall** set the BDS subfield for the basic data link capability report.

Note: *The setting of the BDS code by the transponder ensures that a broadcast change of the capability report will contain the BDS code for all cases of data link failure (e.g., the loss of the transponder data link interface).*

2.2.19.1.13 Aircraft Identification Reporting and AIS Aircraft Identification Subfield in MB

If a transponder is equipped for AIS reporting (Aircraft Identification Reporting), it **shall** report the information in the AIS subfield as described below.

a. Aircraft Identification Reporting

If so equipped, the transponder **shall** report the aircraft identification (aircraft radio call sign) used in the flight plan. This may be either the trip number assigned to commercial flights or the aircraft registration number, where applicable.

Note: *There are indications that a firm requirement may exist for the AIS feature in European Airspace. In such usage, the identification number entered in field 7 of the ICAO flight plan format* ***shall*** *be transmitted in the AIS subfield.*

b. AIS Aircraft Identification Subfield in MB

If a surveillance or Comm-A interrogation (UF=4, 5, 20, 21) contains RR=18 and DI other than 7, or DI=7 and RRS=0, the transponder **shall** report its aircraft identification number in the 48-bit (41-88) AIS subfield in MB.

c. Coding of the AIS Subfield

The MB field containing the AIS subfield **shall** be coded as follows:

1–8	9–14	15–20	21–26	27–32	33–38	39–44	45–50	51–56
BDS	Ch 1	Ch 2	Ch 3	Ch 4	Ch 5	Ch 6	Ch 7	Ch 8

Note: *Aircraft Identification coding permits up to eight characters.*

The BDS code for the Aircraft Identification message **shall** be BDS1=2 and BDS2=0.

DRAFT © 2007 RTCA, Inc.

Each character **shall** be coded as a six-bit subset of the ICAO 7-unit coded character set (ICAO Annex 10) as illustrated in the following table. The character code **shall** be transmitted with the most significant bit b6 first. The reported aircraft code **shall** begin with the left-most character, character 1 (abbreviated as Ch 1 in the above diagram). Characters **shall** be coded consecutively without an intervening SPACE code. Any unused character spaces at the end of the subfield **shall** contain a SPACE character code.

d. Aircraft Identification Capability Reporting

Transponders that respond to a ground-initiated request for aircraft identification **shall** report this capability in the Data Link Capability Report according to §2.2.19.1.12.7.

e. Change of Aircraft Identification

If the aircraft identification reported in the AIS subfield is changed in flight, then the transponder **shall** report the new identification to the ground by use of the Comm-B Broadcast Message protocol.

f. Six-Bit Character Set for Coding Aircraft Identification in the AIS Subfield

				b_6	0	0	1	1
				b_5	0	1	0	1
b_4	b_3	b_2	b_1					
0	0	0	0			P	SP	0
0	0	0	1		A	Q		1
0	0	1	0		B	R		2
0	0	1	1		C	S		3
0	1	0	0		D	T		4
0	1	0	1		E	U		5
0	1	1	0		F	V		6
0	1	1	1		G	W		7
1	0	0	0		H	X		8
1	0	0	1		I	Y		9
1	0	1	0		J	Z		
1	0	1	1		K			
1	1	0	0		L			
1	1	0	1		M			
1	1	1	0		N			
1	1	1	1		O			

SP - SPACE code

DRAFT © 2007 RTCA, Inc.

2.2.19.1.14 Linked Comm-A Coding

Peripherals attached to the Level 2 transponder may use the linked Comm-A protocol. The transponder is transparent to this protocol.

2.2.19.1.15 Multisite Message Protocol

The Level 2 transponder **shall** use the multisite message protocol of §2.2.19.2 as it applies to Comm-D operation.

2.2.19.1.16 Comm-U/V Protocol

The TCAS compatible transponder has the optional capability to receive, store and process information contained in the MU field of UF=16 and return the result of such process in the MV field of subsequent replies.

The protocol described in §2.2.18.2.10 applies to the first 32 bits of UF=16 and DF=16.

The protocol for the contents of the MU and MV fields will be as prescribed for that service.

2.2.19.1.17 Data Handling and Interfaces

In addition to the interfaces described in §2.2.18.2.11, the Level 2 transponder **shall** have interfaces for indirect data as specified in §2.2.13.2.

2.2.19.1.18 TCAS Crosslink Protocol

In response to a UF=0 with RL=1 (see §2.2.14.4.34) and DS ≠0 (see §2.2.14.4.9), the transponder **shall** reply with a DF=16 reply in which the MV field **shall** contain the contents of the ground-initiated Comm-B register designated by the DS value. In response to a UF=0 with RL=1 and DS=0, the transponder **shall** reply with a DF=16 with an MV field of all zeroes. Receipt of a UF=0 with DS non-zero but RL=0 **shall** have no associated TCAS crosslink action, and the transponder **shall** reply per §2.2.14.4.34.

2.2.19.2 The Multisite Message Protocol

Under certain circumstances it may be necessary for several Mode S interrogators, which have overlapping coverage, to operate without being in direct communication with each other. The multisite protocols described herein provide a means to prevent conflicts.

All multisite protocols are covered in the following paragraphs. However, only the Comm-B protocol **shall** apply to the minimum data link transponder.

DRAFT © 2007 RTCA, Inc.

2.2.19.2.1 Multisite Data Formats

2.2.19.2.1.1 Subfields in SD

The SD field contains information as follows:

a. If the DI code is 0, 1 or 7:

IIS: The 4-bit (17-20) Interrogator Identifier Subfield contains the self-identification code of the interrogator which is numerically identical to the II code transmitted by the same interrogator in the Mode S-Only All-Call. IIS codes are assigned to interrogators and range from 0 through 15; IIS=0 is not a valid interrogator identifier for multisite purposes.

b. If the DI=l:

MBS: The 2-bit (21, 22) Multisite Comm-B Subfield has been assigned the following codes:

Code	Description
0	No Comm-B action
1	Comm-B reservation
2	Comm-B closeout

MES: The 3-bit (23-25) Multisite ELM Subfield contains reservation and closeout commands for ELM as follows:

Code	Description
0	No ELM action
1	Comm-C reservation
2	Comm-C closeout
3	Comm-D reservation
4	Comm-D closeout
5	Comm-C reservation and Comm-D closeout
6	Comm-C closeout and Comm-D reservation
7	Comm-C and Comm-D closeouts

RSS: The 2-bit (27-28) Reservation Status Subfield can request the transponder to report its reservation status in the UM field. The following codes have been assigned:

Code	Description
0	No request
1	Report Comm-B reservation status in UM
2	Report Comm-C reservation status in UM
3	Report Comm-D reservation status in UM

DRAFT © 2007 RTCA, Inc.

c. If the DI code is 1 or 7:

LOS: The 1-bit (26) Lockout Subfield, if set to ONE, initiates a multisite All-Call lockout to Mode S-Only All-Calls (UF=11) from the interrogator indicated in IIS of the same interrogation. If LOS is set to ZERO no change in lockout state is commanded.

TMS: Tactical Message Subfield, subfield in SD 4 bits, 29 through 32. This subfield is used for identifying linkage of Comm-A messages, with "0" indicating an unlinked message. Coding for this field is not described in this document.

d. If the DI=7:

RRS: Reply Request, subfield in SD, 4 bits, 21 through 24.

Coding: Corresponding to the requested BDS2 code. (See note in §2.2.14.4.35).

e. If the DI=2, the SD field is used for Extended Squitter surface control (see §2.2.23.1.7).

f. If the DI=3:

SIS: The 6-bit (17-22) surveillance identifier subfield in SD **shall** contain an assigned SI code of the interrogator (see §2.2.14.4.37).

LSS: The 1-bit (23) lockout surveillance subfield if set to ONE **shall** signify a multisite lockout command from the interrogator indicated in SIS. LSS set to ZERO **shall** be used to signify that no change in lockout state is commanded.

RRS: This 4-bit (24-27) reply request subfield in SD **shall** be coded as specified in subparagraph d.

When DI=1, PC field processing **shall** be completed before processing the SD field.

Note 1: *If SD field processing were to be performed before PC field processing in an interrogation containing a Comm–B close-out in the PC field and a request or a multisite reservation in the SD field, the results would be incorrect.*

DRAFT © 2007 RTCA, Inc.

Note 2: *Structure of SD if:*

Structure of SD, if:	**Position**	**Number of Bits**	**Subfield**
DI=1	17 – 20	4	IIS
	21 – 22	2	MBS
	23 – 25	3	MES
	26	1	LOS
	27 – 28	2	RSS
	29 – 32	4	TMS
DI=2	17 – 20	4	Not Assigned
	21 – 23	3	TCS
	24 – 26	3	RCS
	27 – 28	2	SAS
	29 – 32	4	Not Assigned
DI=3	17 – 22	6	SIS
	23	1	LSS
	24 – 27	4	RRS
	28 – 32	5	Not Assigned
DI=7	17 – 20	4	IIS
	21 – 24	4	RRS
	25	1	Not Assigned
	26	1	LOS
	27 – 28	2	Not Assigned
	29 – 32	4	TMS

2.2.19.2.1.2 Subfields in UM for Multisite Protocols

If a surveillance or Comm-A interrogation (UF=4, 5, 20, 21) contains DI=1 and RSS equals other than "0," the following subfields will be inserted into the reply by the transponder.

If the above interrogation contains DI=0 or 7, or when DI=1 and RSS=0, the transponder **shall** insert IIS and IDS codes according to a Comm-B reservation if such reservation exists or is presently requested. In the absence of a Comm-B reservation, IIS and IDS codes for an existing or requested Comm-D reservation **shall** be inserted.

IIS: The four-bit (14-17) Interrogator Identifier Subfield reports the identity of the interrogator that has made a multisite reservation.

IDS: The two-bit (18-19) Identifier Designator Subfield reports the type of reservation made by the interrogator identified in IIS. Assigned coding is:

Code	**Description**
0	no information available
1	Comm-B reservation active
2	Comm-C reservation active
3	Comm-D reservation active

DRAFT © 2007 RTCA, Inc.

2.2.19.2.2 Multisite Common Protocols

The multisite timers and the interrogator identity report are common to all multisite message protocols.

2.2.19.2.2.1 Multisite Timers

The multisite protocols require three timers in the transponder:

B-timer for Comm-B – (T_{RB})

C-timer for Comm-C – (T_{RC})

D-timer for Comm-D – (T_{RD})

Each multisite timer **shall** run for 18 ±1 seconds after starting or restarting and is used for automatic closeout of the respective message type.

Note: *Each timer can be stopped (reset) on command from the ground.*

2.2.19.2.2.2 Interrogator Identity Report

Transponders **shall** insert the interrogator identifier into the UM field of the reply according to the coding of RSS.

2.2.19.2.3 Multisite Comm-B Protocol (Figure 2-19)

The multisite Comm-B protocol augments the standard Comm-B protocol and when not in use **shall** not modify the standard process in any way.

2.2.19.2.3.1 Multisite Comm-B Reservation

When the multisite protocol is in use, an interrogator extracts an air-initiated Comm-B by transmitting a surveillance or Comm-A interrogation containing:

RR = 16 (read air-initiated Comm-B)

DI = 1 (multisite SD format)

IIS = Interrogator's site number

MBS = 1 (Comm-B reservation request)

The interrogator may also transmit:

RSS=1 (Comm-B reservation status request)

A multisite Comm-B reservation is invalid and **shall** not be granted by the transponder unless an air-initiated Comm-B message is waiting to be transmitted and the requesting interrogation contains RR=16, DI=1, MBS=1, IIS is not zero and the B timer is not running.

DRAFT © 2007 RTCA, Inc.

Transponder protocol procedures **shall** depend upon the state of the B-timer as follows:

a. B-timer not running

Store IIS for Comm-B.

Start B-timer.

b. B-timer running and interrogator's IIS equals stored Comm-B IIS

Restart B-timer.

c. B-timer running and interrogator's IIS is not equal to stored Comm-B IIS

No change to stored IIS or B-timer.

Note: *When an interrogator asks for Comm-B reservation status and receives its own site number in the UM field of the reply to an interrogation that contained the multisite Comm-B request, it knows that it is the reserved site for this message and that it should complete the transaction by closing out the message.*

2.2.19.2.3.2 Multisite Directed Comm-B Transmissions

If the airborne data system needs to direct a Comm-B message to a specific interrogator, the air-initiated Comm-B protocol **shall** be used together with the multisite protocol above. When the B-timer is not running, the IIS of the desired destination **shall** be stored and transmitted in bits 14-17, together with IDS=1 in bits 18 and 19 of the UM field unless UM use is preempted by command from the ground. Simultaneously the B-timer **shall** be started and code DR=1 transmitted.

The reservation **shall** not be automatically timed out by the transponder but **shall** continue until either:

a. the message is read and closed out by the reserved site; or

b. the message is canceled by the data link processor.

Note: *This protocol is intended to result in delivery of the message only to the reserved site. As in all air-initiated messages, the data link processor may withdraw the message if delivery has not been accomplished within a nominal time or if another air-initiated message is waiting to be sent. In this protocol the B-timer in the transponder is not actually used as a timer. However, it does retain its function as a flag to indicate that a multisite transaction is in progress (see §2.2.19.2.3.1).*

2.2.19.2.3.3 Multisite Comm-B Closeout

Multisite Comm-B closeout is accomplished using a surveillance or Comm-A interrogation containing:

DI = 1 (multisite SD format).

DRAFT © 2007 RTCA, Inc.

IIS = Interrogator site number.

MBS = 2 (Comm-B closeout).

If IIS of the interrogation equals the stored Comm-B IIS, the stored Comm-B **shall** be cleared, the B-timer stopped, the DR code 1 for this message reset and the message itself canceled. If the site numbers do not match, the message **shall** not be canceled and the stored Comm-B IIS, B-timer and DR code **shall** remain unchanged. The transponder **shall** not close out a multisite air-initiated Comm-B message unless it has been read out at least once by the reserved site.

2.2.19.2.3.4 Automatic Comm-B Closeout

If the transponder B-timer runs out before a multisite closeout is accepted, the stored Comm-B IIS **shall** be set to "0" and the T-register **shall** be cleared to enable this message to be read and cleared by another site.

2.2.19.2.3.5 Significance of PC Command

When the transponder is in the multisite mode, i.e., when the IIS stored for Comm-B is not "0," receipt of a closeout (PC=4) **shall** have no effect on the transaction unless accompanied by IIS equal to the stored Comm-B IIS.

2.2.19.3 Additional Features

Additional features are refinements or extensions of the transponder design which may be required for transponders used in special circumstances or missions.

2.2.19.3.1 Diversity

Diversity, as specified in §2.2.12, should be implemented in wide-body aircraft and in conjunction with transponders installed with airborne collision avoidance systems (CAS).

2.2.19.3.2 Mutual Suppression System

Mutual suppression systems may be needed if the aircraft has other pulse L-band equipment on board or if the transponder is used in conjunction with certain CAS (see §2.2.11).

2.2.20 Level 3 & Level 4 Transponder – Extended Length Message (ELM) Protocols

DRAFT © 2007 RTCA, Inc.

2.2.20.1 Level 3 Uplink ELM

2.2.20.1.1 Uplink ELM Capability

This additional capability described in §1.4.3.3 requires that the transponder **shall**, in addition to the functions of the Level 2 transponder:

a. Process uplink and downlink formats UF=DF=24.
b. Follow the protocols for Comm-C.
c. Follow the applicable procedures for multisite operation.
d. Report Codes 4 through 7 in the CA field (see §2.2.14.4.6).

Note: *This transponder uses all the formats shown in Figure 2-4 and Figure 2-5.*

2.2.20.1.1.1 Comm-C/ELM Protocol (Figure 2-20 and Figure 2-21)

Uplink ELMs are transmitted in segments with each segment formed by a Comm-C format.

In addition to the segment content in MC, two protocol fields, NC and RC, are used. NC is the segment number transmitted.

RC identifies the transmission as initial, intermediate or final.

The minimum length of an uplink ELM is two segments. The transfer of all segments may take place without intervening replies. The minimum time between the beginning of successive Comm-C transmissions is 50 microseconds.

2.2.20.1.1.1.1 Initializing Segment Transfer

The ELM transaction for an n-segment message (NCs 0 through n-l) **shall** be initiated upon receipt of a Comm-C transmission containing RC=0. The text transmitted in MC **shall** be stored. This text is the last segment of the message and carries NC=n-l. Upon receipt of NC, the transponder **shall** establish the number of further segments to be received and stored. Receipt of an initializing (RC=0) segment **shall** establish the "setup" in the transponder, which is now prepared to accept further segments.

Receipt of another initializing segment **shall** result in a new setup within the transponder and cause any previously stored segments to be discarded.

A transponder reply **shall** not be generated on receipt of an initializing segment.

DRAFT © 2007 RTCA, Inc.

2.2.20.1.1.1.2 Intermediate Segment Transfer

Intermediate segments are characterized by RC=1 and **shall** be accepted and stored by the transponder only if the setup of the previous paragraph is in effect and if the received NC is smaller than the value stored at receipt of the initializing segment.

A reply **shall** not be generated on receipt of the intermediate segment.

Note: *Intermediate segments may be transmitted in any order.*

2.2.20.1.1.1.3 Final Segment Transfer

The final segment, characterized by RC=2, **shall** be accepted by the transponder under all circumstances and requires a reply (with the standard 128-microsecond Mode S reply delay). The segment content **shall** be stored if the setup of §2.2.20.1.1.1.1 is in effect and if the received NC is smaller than the value of the initial segment NC.

2.2.20.1.1.1.4 Completed Message

The message is completed if all segments announced by NC in the initializing segment have been received. If the message is completed, the content **shall** be transferred to the ELM interface of §2.2.13.4, and the setup **shall** be deactivated.

2.2.20.1.1.1.5 Acknowledgment Reply

The transponder **shall** acknowledge receipt of a final segment by replying with a Comm-D transmission, with KE=1. KE=1 indicates that the MD field contains subfield TAS that reports which segments have been received. This reply **shall** be transmitted 128 microseconds plus or minus 0.25 microsecond following receipt of the sync phase reversal of the interrogation delivering the final segment.

The information contained in the TAS subfield **shall** be continually updated while segments are received and **shall** not be cleared until a new initializing segment is received or until closeout occurs.

Note: *Segments lost in uplink transmission are noted by their absence in the TAS report and are re-transmitted by the interrogator, which will then send further final segments to assess the situation.*

2.2.20.1.1.1.6 TAS Transmission Acknowledgment, Subfield in MD

This 16-bit (17-32) downlink subfield in MD **shall** report the segments received so far in a Comm-C sequence. Starting with bit 17, which denotes segment number "0," each of the following bits is ONE if the corresponding segment of the sequence has been received. TAS appears in MD if KE=1 in the same reply.

DRAFT © 2007 RTCA, Inc.

2.2.20.1.1.1.7 Closeout

A closeout transmission informs the transponder that the TAS has been received and that it **shall** be cleared. This closeout (PC=5) is contained in a surveillance or Comm-A interrogation.

An uncompleted message, present when the closeout is received, **shall** be closed out.

2.2.20.1.1.1.8 Information Transfer

Comm-C equipped transponders **shall** be able to transfer received information to the appropriate data sinks (see §2.2.13, §2.2.19.b and §2.2.19.c).

2.2.20.1.2 Uplink Interface – Interrogator Identity

In addition to data transferred per §2.2.20.1.4, the uplink interface signal **shall** contain the interrogator site number (IIS) of the sensor that has transmitted an ELM by multisite protocol. The IIS stored for Comm-C (see §2.2.20.1.3.1) when the message is completed (see §2.2.17.3.1.4) **shall** be used for this purpose.

Note: *If the multisite protocol is not used, an IIS code of ZERO will be stored and reported.*

2.2.20.1.3 Multisite Uplink ELM Protocol (Figure 2-20 and Figure 2-21)

Note: *The multisite Comm-C protocol augments the standard Comm-C protocol and when not in use does not modify the standard protocol in any way. Codes used in the SD and UM fields for ELM multisite protocols are described in §2.2.19.2.1.1 and §2.2.19.2.1.2.*

DRAFT © 2007 RTCA, Inc.

NOTES: 1. "RESERVATION" INDICATES THAT THE IIS IS STORED AND THE TIMER IS STARTED.
2. "CLOSEOUT" INDICATES THAT THE STORED IIS IS CANCELLED, THE TIMER IS STOPPED, TAS IS CLEARED AND THE SETUP IS CANCELLED.
3. "O" INDICATES TERMINATION OF THE PROCESS.
4. BOLD BORDERS INDICATE TRANSPONDER STATES.
5. THIS FIGURE DOES NOT INCLUDE THE ENHANCED DATA LINK PROTOCOL FEATURES.

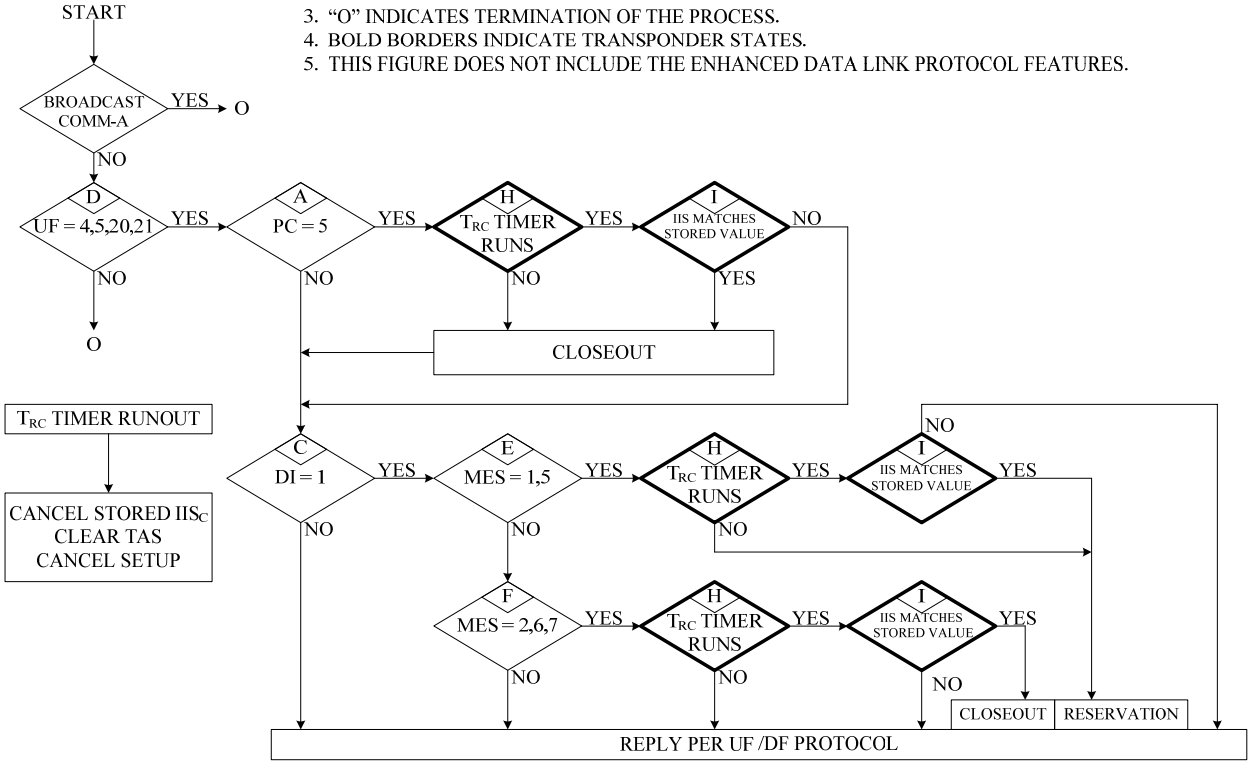

Figure 2-20: Comm-C Reservation and Closeout

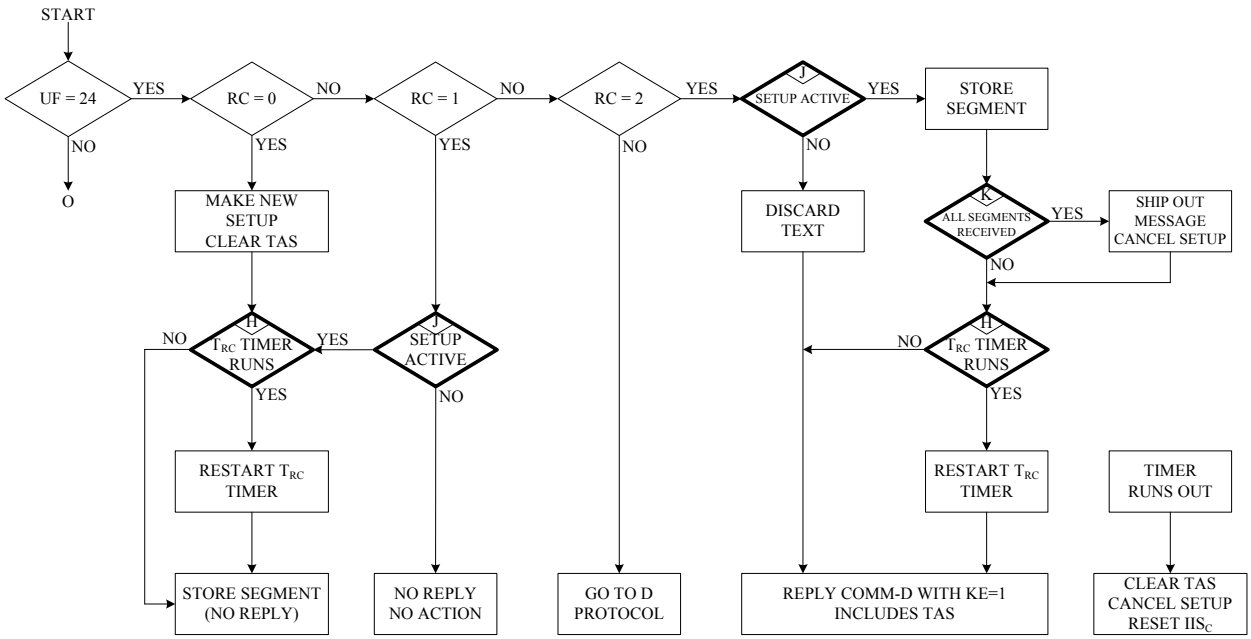

NOTES: 1. BOLD BORDERS INDICATE TRANSPONDER STATES.
2. "O" INDICATES TERMINATION OF PROCESS.
3. THIS FIGURE DOES NOT INCLUDE THE ENHANCED DATA LINK PROTOCOL FEATURES

Figure 2-21: Comm-C Message Handling

2.2.20.1.3.1 Multisite Comm-C Reservations

When the multisite protocol is in use, an interrogator makes a reservation for an uplink ELM by transmitting a surveillance or Comm-A interrogation containing:

DI	=	1 (multisite SD format).
IIS	=	Interrogator's site number.
MES	=	1 or 5 (Comm-C reservation request).

The interrogator may also transmit:

RSS	=	2 (Comm-C reservation status request).

Protocol procedure in response to this interrogation **shall** depend upon the state of the C-timer as follows:

a. C-timer not running

Store IIS for Comm-C.
Start C-timer.

b. C-timer running and interrogator's IIS equals stored Comm-C IIS

Restart C-timer.

c. C-timer running and interrogator's IIS is not equal to stored Comm-C IIS

No change to stored IIS or C-timer.

Note: *When an interrogator asks for Comm-C reservation status and receives its own site number in the UM field of the reply to a reservation interrogation, it proceeds with the delivery of the uplink ELM. Otherwise, ELM activity is not started during this ground antenna scan and a new reservation request is made during the next scan.*

2.2.20.1.3.2 Multisite Comm-C Delivery

After multisite coordination is accomplished via the surveillance or Comm-A interrogation, uplink ELM delivery **shall** be as described in §2.2.20.1.1. In addition, the C-timer **shall** be restarted each time a received segment is stored and the stored Comm-C IIS is not "0."

Note: *The requirement that the stored Comm-C IIS be other than "0" prevents the C-timer from being restarted during a non-selective uplink ELM transaction.*

DRAFT © 2007 RTCA, Inc.

2.2.20.1.3.3 Multisite Comm-C Closeout

Multisite Comm-C closeout **shall** be accomplished upon receipt of a surveillance or Comm-A interrogation containing:

DI	=	1 (Multisite SD format).
IIS	=	Interrogator's site number.
MES	=	2, 6 or 7 (Comm-C closeout).

If the stored Comm-C IIS equals the IIS of the interrogator, the uplink ELM **shall** be closed out as described in §2.2.20.1.1.1.7, the stored Comm-C IIS **shall** be cleared and the C-timer stopped. If the site numbers do not match, the message **shall** not be closed out and the states of the stored Comm-C IIS and the C-timer remain unchanged.

2.2.20.1.3.4 Automatic Comm-C Closeout

The closeout actions described in §2.2.20.1.3.3 **shall** be initiated automatically when the C-timer runs out.

2.2.20.1.3.5 Significance of PC Command

When the transponder is in the multisite mode, i.e., when the IIS stored for Comm-C is not "0," receipt of a cancellation (PC=5) **shall** have no effect on the transaction unless accompanied by IIS equal to the stored Comm-C IIS.

2.2.20.1.4 Uplink Interface – Data Rate

A transponder equipped for standard uplink ELM operation **shall** be able to transfer data from at least four complete 16-segment uplink ELMs in any four-second period. A transponder equipped for enhanced uplink ELM operation **shall** be able to transfer data from at least four 16-segment uplink ELMs in any one-second period. In each case, the ELMs **shall** be transferred if they are spaced no closer than 5 milliseconds from the end of one ELM to the beginning of the next. For transponders equipped with the enhanced protocols, this 5 millisecond spacing requirement **shall** also apply to successive 16 segment ELMs bearing the same II code. The content of any uplink ELM **shall** be available for transfer across the output interface no later than ONE (1) second after it has been received.

Note: *This requirement allows the transponder to operate in regions in which there are multiple interrogators operating in the multi-site or enhanced protocol mode. It also permits the transponder to take advantage of the capabilities of a sensor with an electronically-scanned antenna*

DRAFT © 2007 RTCA, Inc.

2.2.20.2 Level 4 Downlink ELM

2.2.20.2.1 Full ELM Capability (Figure 2-22 and Figure 2-23)

This additional capability, described in §1.4.3.4, requires that the transponder **shall**, in addition to the functions previously described, follow the protocols for:

a. Comm-D ELM.
b. Applicable multisite procedures.
c. Report Codes 4 through 7 in the CA field (see §2.2.14.4.6).

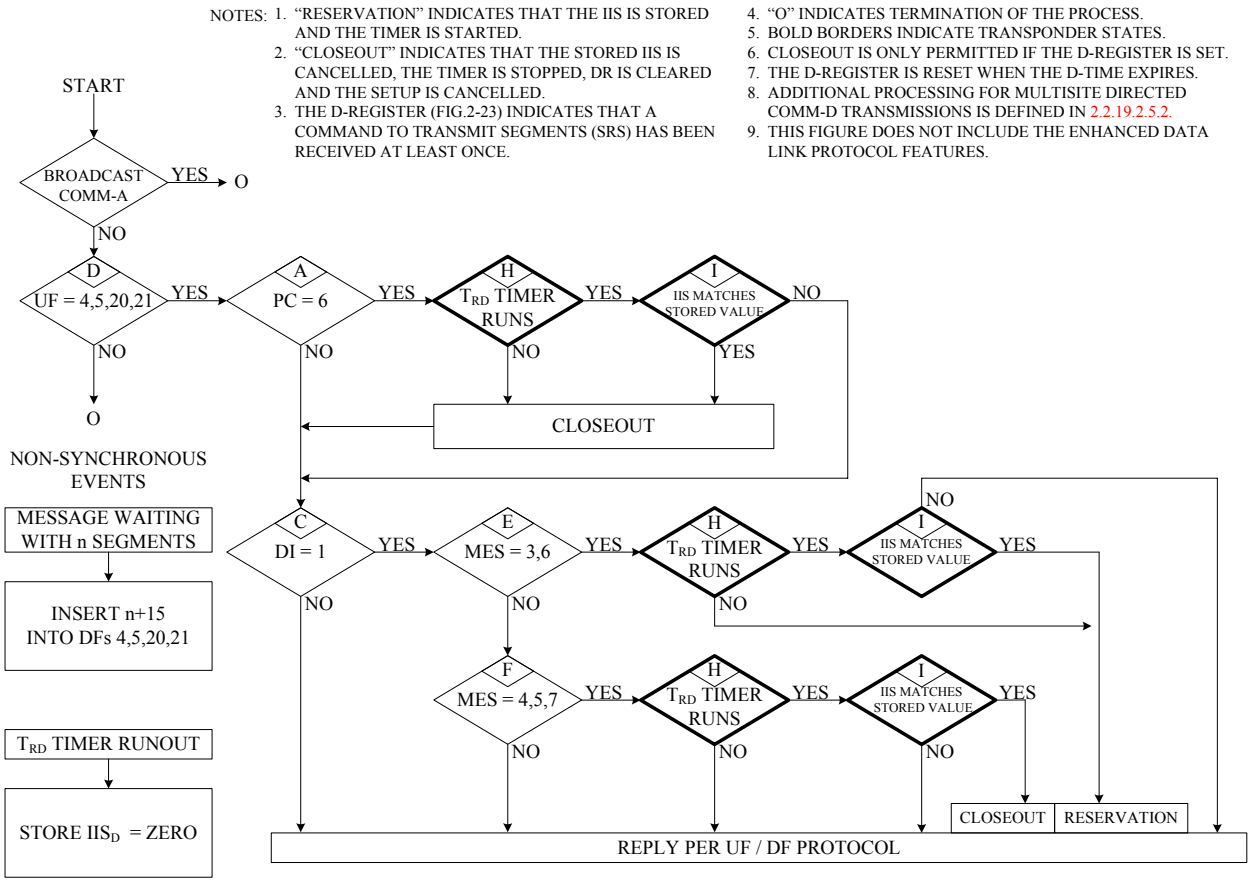

Figure 2-22: Comm-D Reservation and Closeout

2.2.20.2.1.1 The Comm-D/ELM Protocol (Figure 2-23)

Downlink ELMs **shall** be transmitted only after authorization by the interrogator. The segments to be transmitted are contained in Comm-D replies.

DRAFT © 2007 RTCA, Inc.

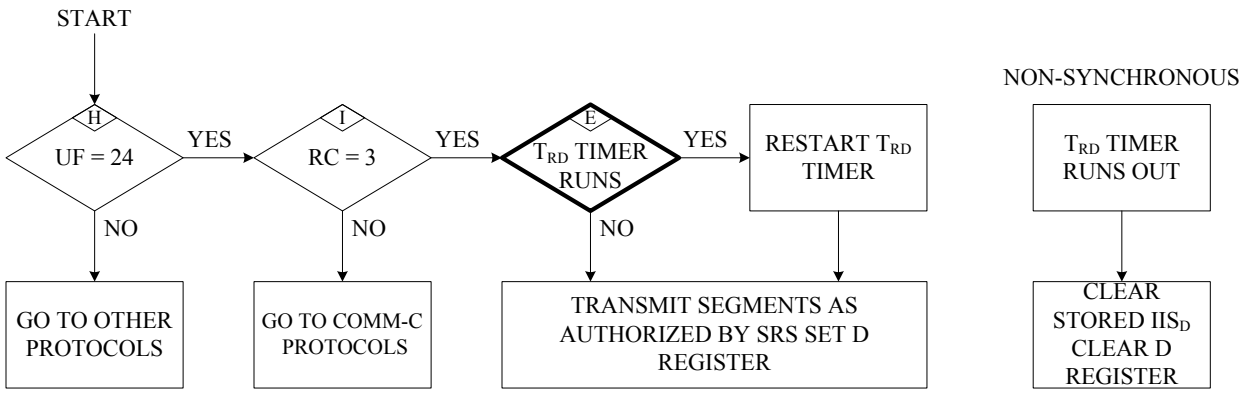

NOTES: 1. BOLD BORDERS INDICATE TRANSPONDER STATE.
2. ADDITIONAL PROCESSING REQUIRED FOR MULTISITE DIRECTED COMM-D TRANSMISSIONS IN DEFINED IN 2.2.19.2.5.2.
3. THIS FIGURE DOES NOT INCLUDE THE ENHANCED DATA LINK PROTOCOL FEATURES.

Figure 2-23: Comm-D Message Handling

2.2.20.2.1.1.1 Initialization

To request permission to send n-segments, the transponder **shall** insert the code corresponding to the value 15+n into the DR field of a surveillance or Comm-B reply, DF=4, 5, 20, 21.

2.2.20.2.1.1.2 Authorization and Transmission

The interrogator requests the transmission of Comm-D segments by a Comm-C interrogation characterized by RC=3. This Comm-C format carries the SRS subfield which is a summary of the segments to be transmitted. On receipt of this authorization the transponder **shall** transmit the first segment with the standard 128-microsecond Mode S reply delay followed by subsequent segments at a rate of one every 136 ±1 microseconds by means of Comm-D formats with KE=0 and ND corresponding to the number of the segment in MD. Segments can be transmitted in any order. The authorization process may be repeated by the interrogator.

2.2.20.2.1.1.3 SRS Segment Request Subfield in MC

If a Comm-C interrogation (UF=24) contains RC=3, it also contains a list of segment request-authorizations in the 16-bit (9-24) SRS subfield. Starting with bit 9, which denotes the first segment, each of the following bits is set to ONE if the transmission of the corresponding segment is requested.

2.2.20.2.1.1.4 Closeout

A closeout transmission is used to inform the transponder that all segments have been received and that the DR field **shall** be reset. This closeout (PC=6) is contained in a surveillance or Comm-A interrogation and **shall** be effective only after a request for

transmission has been complied with at least once (see D-Register in Figure 2-22 and Figure 2-23).

2.2.20.2.1.1.5 Information Transfer

The Comm-D/ELM-equipped transponder **shall** have access to the appropriate data sources (see §2.2.13.4, §2.2.19.b and §2.2.19.c).

2.2.20.2.2 Downlink Message Cancellation

Downlink interfaces of storage design for both Comm-B and ELM **shall**, in addition to data transfer, accept a signal that cancels a message previously transferred into the transponder if the delivery cycle of the message has not been closed out by ground command.

If more than one message is stored within the transponder for future transmission, the cancellation procedure **shall** be capable of canceling the stored messages selectively.

2.2.20.2.3 Multisite Downlink ELM Protocol

Note: *The multisite Comm-D protocol augments the standard Comm-D protocol and when not in use does not modify the standard protocol in any way. Codes used in the SD and UM fields for ELM multisite protocols are described in §2.2.19.2.1.1 and §2.2.19.2.1.2.*

2.2.20.2.3.1 Multisite Comm-D Reservation

When the multisite protocol is in use, an interrogator makes a reservation for ground initiation of a Comm-D message transfer by transmitting a surveillance or Comm-A interrogation containing:

DI	=	1 (multisite SD format).
IIS	=	Interrogator's site number.
MES	=	3 or 6 (Comm-D reservation request).

The interrogator may also transmit:

RSS	=	3 (Comm-D reservation status request).

A multisite downlink ELM reservation **shall** not be granted by the transponder unless a downlink ELM is waiting to be transmitted.

Protocol procedure in response to this interrogation **shall** depend upon the state of the D-timer as follows:

DRAFT © 2007 RTCA, Inc.

a. D-timer not running

Store IIS for Comm-D.
Start D-timer.

b. D-timer running and interrogator's IIS equals stored Comm-D IIS

Restart D-timer.

c. D-timer running and interrogator's IIS is not equal to stored Comm-D IIS

No change to stored IIS or D-timer.

Note: *When an interrogator asks for Comm-D reservation status and receives its own site number in the UM field of the reply to a reservation interrogation, it proceeds to request delivery of the downlink ELM. Otherwise, ELM activity is not started during this ground antenna scan and a new reservation request may be made during the next scan.*

2.2.20.2.3.2 Multisite Directed Comm-D Transmissions

If the airborne data system needs to direct a Comm-D ELM message to a specific interrogator, a procedure corresponding to the directed Comm-B protocol **shall** be used.

In effect, a "self reservation" is accomplished by storing the IIS of the desired site destination and proceeding with the usual protocol. The stored IIS and IDS=3 **shall** be transmitted in the UM field unless UM use is preempted by command from the ground or there is a Comm-B reservation.

For a multisite directed Comm-D message, the reservation **shall** not be automatically timed out but **shall** continue until either:

a. the message is read and closed out by the reserved site; or

b. the message is canceled by the data link processor.

Note: *This protocol is intended to result in delivery of the message only to the reserved site. As in all downlink ELM messages, the data link processor may withdraw the message if delivery has not been accomplished within a nominal time or if another message is waiting to be sent. In this protocol the D-timer in the transponder is not actually used as a timer. However, it does retain its function as a flag to indicate that a multisite transaction is in progress (see §2.2.19.2.3.1).*

DRAFT © 2007 RTCA, Inc.

2.2.20.2.3.3 Multisite Comm-D Delivery

After multisite coordination is accomplished by the surveillance or Comm-A interrogation, downlink ELM delivery **shall** be as described in §2.2.20.2.1.1.

In addition, the D-timer **shall** be restarted each time a request for Comm-D segments is received and the stored Comm-D IIS is other than "0."

Note: *The requirement that the stored Comm-D IIS be other than "0" prevents the D-timer from being restarted during a standard downlink ELM transaction.*

2.2.20.2.3.4 Multisite Comm-D Closeout

Multisite Comm-D closeout is accomplished using a surveillance or Comm-A interrogation containing:

DI	=	1 (Multisite SD format).
IIS	=	Interrogator's site number.
MES	=	4, 5, or 7 (Comm-D closeout).

If the stored Comm-D IIS equals the IIS of the interrogator, the downlink ELM **shall** be closed out as described in §2.2.20.2.1.1.4. The stored Comm-D IIS **shall** be cleared and the D-timer stopped. If the site numbers do not match, the message is not closed out and the states of the stored Comm-D IIS, the D-timer and the DR code remain unchanged.

2.2.20.2.3.5 Automatic Comm-D Closeout

If the D-timer runs out, the stored Comm-D IIS **shall** be set to "0." The Comm-D message and the DR field **shall** not be cleared. (This makes it possible for another site to read and clear the Comm-D message.)

2.2.20.2.3.6 Significance of PC Command

When the transponder is in the multisite mode, i.e., when the IIS stored for Comm-D is not "0," receipt of a closeout (PC=6) **shall** have no effect on the transaction unless accompanied by IIS equal to the stored Comm-D IIS.

2.2.20.2.4 Downlink Interface – Data Rate

A transponder equipped for standard downlink ELM operation **shall** be able to transmit at least four downlink ELM segments in any ONE (1)-second period. A transponder equipped for enhanced ELM operation **shall** be able to transmit at least sixteen downlink ELM segments in any ONE (1)-second period.

DRAFT © 2007 RTCA, Inc.

2.2.21 Level 5 Transponder – Enhanced Protocols

2.2.21.1 Enhanced Air-Initiated Comm-B Protocol

Note: *The enhanced air-initiated Comm-B protocol provides a higher data link capacity by permitting parallel delivery of air-initiated Comm-B messages by up to 16 interrogators, one for each II code. Operation without the need for multisite Comm-B reservations is possible in regions of overlapping coverage for interrogators equipped for the enhanced air-initiated Comm-B protocol. The protocol is fully conformant to the standard multisite protocol and thus is compatible with interrogators that are not equipped for the enhanced protocol.*

2.2.21.1.1 General

The interrogator **shall** determine from the data link capability report whether the transponder supports the enhanced protocols. If the enhanced protocols are supported, Comm-B messages delivered using the multisite protocol may be delivered without a prior reservation. If the enhanced protocols are not supported by both the interrogator and the transponder, the multisite reservation protocols specified in §2.2.19.2.3.1 **shall** be used.

Recommendation: *If the transponder and the interrogator are equipped for the enhanced protocol, the interrogator should use the enhanced Comm-B protocol.*

The transponder **shall** be capable of storing 2 or more messages for each of the 16 II codes: (1) an air-initiated or multisite-directed Comm-B message and (2) the contents of registers for BDS1=0 and BDS2=2 through 4.

Note: *GICB registers 2 - 4 are used for the Comm-B linking protocol defined in the RTCA/DO 218A.*

2.2.21.1.2 Enhanced Multisite Air-Initiated Comm-B Protocol

2.2.21.1.2.1 Initiation

An air-initiated Comm-B message input into the transponder **shall** be stored in the registers assigned to II=0.

2.2.21.1.2.2 Announcement and Extraction

A waiting air-initiated Comm-B message **shall** be announced in the DR field of the replies to all interrogators for which a multisite directed Comm-B message is not waiting. The UM field of the announcement reply **shall** indicate that the message is not reserved for any II code, i.e., the IIS subfield **shall** be set equal to ZERO. When a command to read this message is received from a given interrogator, the B Timer for the associated interrogator is started and the reply containing the message **shall** contain the same IIS subfield content indicating that the message is reserved for the II code contained in the interrogation from that interrogator. After readout and until closeout, the message **shall** continue to be assigned to that II code. Once a message is assigned to a specific II code,

DRAFT © 2007 RTCA, Inc.

announcement of this message **shall** be no longer made in the replies to interrogators with other II codes. If the message is not closed out by the assigned interrogator for the period of the B-timer, the message **shall** revert back to multisite air-initiated status and the process **shall** repeat. Only one multisite air-initiated Comm-B message **shall** be in process at a time.

2.2.21.1.2.3 Closeout

A closeout for a multisite air-initiated message **shall** only be accepted from the interrogator that is currently assigned to transfer the message.

2.2.21.1.2.4 Announcement of the Next Message Waiting

The DR field **shall** indicate a message waiting in the reply to an interrogation containing a Comm-B closeout to an air-initiated message if an unassigned air-initiated message is waiting and has not been assigned to an II code, or if a multisite-directed message is waiting for that II code (see §2.2.21.1.3).

2.2.21.1.3 Enhanced Multisite Directed Comm-B Protocol

2.2.21.1.3.1 Initiation

When a multisite directed message is input into the transponder, it **shall** be placed in the Comm-B registers assigned to the II code specified for the message and starts the B-timer. If the registers for this II code are already occupied, (i.e., a multisite directed message is already in process to this II code) the new message **shall** be queued until the current transaction with that II code is closed out.

Note: *For a multisite-directed message, the B-timer does not expire. A multi-site directed message can only be canceled by the ADLP.*

2.2.21.1.3.2 Announcement

Announcement of a Comm-B message waiting transfer **shall** be made using the DR field as specified in §2.2.14.4.12 with the destination interrogator II code contained in the IIS subfield as specified in §2.2.19.2.1.1. The DR field and IIS subfield contents **shall** be set specifically for the interrogator that is to receive the reply. A waiting multisite directed message **shall** only be announced in the replies to the intended interrogator. It **shall** not be announced in the replies to other interrogators.

Notes:

1. *If a multisite-directed message is waiting for II=2, the surveillance replies to that interrogator will contain DR=1 and IIS=2. If this is the only message in process, replies to all other interrogators will indicate that no message is waiting.*

2. *In addition to permitting parallel operation, this form of announcement enables a greater degree of announcement of downlink ELMs. The announcements for the downlink ELM and the Comm-B share the DR field. Only one announcement can take place at a time due to coding limitations. In case both a Comm-B and a*

DRAFT © 2007 RTCA, Inc.

downlink ELM are waiting, announcement preference is given to the Comm-B. In the example above, if an air-directed Comm-B was waiting for II=2 and a multisite-directed downlink ELM was waiting for II=6, both interrogators would see their respective announcements on the first scan since there would be no Comm-B announcement to II=6 to block the announcement of the waiting downlink ELM.

2.2.21.1.3.3 Closeout

Closeout **shall** be accomplished as specified in §2.2.19.2.3.3.

2.2.21.1.3.4 Announcement of the Next Message Waiting

The DR field **shall** indicate a message waiting in the reply to an interrogation containing a Comm-B closeout if another multisite directed message is waiting for that II code, or if an air-initiated message is waiting and has not been assigned to an II code (see §2.2.19.1.12.4).

2.2.21.1.4 Enhanced Broadcast Comm-B Protocol

A broadcast Comm-B message **shall** be announced to all 16 interrogator II codes. The message **shall** remain active for the period of the B-timer associated with each II code (i.e., the message **shall** not be withdrawn after a single B-timer timeout, but is intended to be read-out by each II code within view). The provision for interruption of a broadcast by non-broadcast Comm-B as specified in §2.2.19.1.12.4.1 **shall** apply separately to each II code. When the B-timer period has been achieved for all II codes, the broadcast message **shall** be automatically cleared as specified in §2.2.19.1.12.4.1. A new broadcast message **shall** not be initiated or announced until the current broadcast has been cleared.

Note: *Due to the fact that broadcast message interruption occurs independently for each II code, it is possible that the broadcast message timeout will occur at different times for different II codes.*

2.2.21.2 Enhanced Uplink ELM Protocol

Note: *The enhanced uplink ELM protocol provides a higher data link capacity by permitting parallel delivery of uplink ELM messages by up to sixteen interrogators, one for each II code. Operation without the need for multisite uplink ELM reservations is possible in regions of overlapping coverage for interrogators equipped for the enhanced uplink ELM protocol. The protocol is fully conformant to the standard multisite protocol and thus is compatible with interrogators that are not equipped for the enhanced protocol.*

2.2.21.2.1 General

The interrogator **shall** determine from the data link capability report whether the transponder supports the enhanced protocols. If the enhanced protocols are supported, uplink ELMs delivered using the multisite protocol may be delivered without a prior

DRAFT © 2007 RTCA, Inc.

reservation. If the enhanced protocols are not supported by both the interrogator and the transponder, the multisite reservation protocols specified in §2.2.20.1.3.1 **shall** be used.

Recommendation: *If the transponder and the interrogator are equipped for the enhanced protocol, the interrogator should use the enhanced uplink ELM protocol.*

The transponder **shall** be capable of storing a sixteen-segment message for each of the 16 II codes.

2.2.21.2.2 Reservation Processing

The transponder **shall** support reservation processing for each II code as specified in §2.2.20.1.3.1.

Notes:

1. *Reservation processing is required for interrogators that do not support the enhanced protocol.*

2. *Since the transponder can handle simultaneous uplink ELMs for all 16 II codes, a reservation will always be granted.*

2.2.21.2.3 Enhanced Uplink ELM Delivery and Closeout

The transponder **shall** process received segments separately by II code. For each value of II code, uplink ELM delivery and closeout **shall** be performed as specified in §2.2.20.1.3 and §2.2.20.1.1 except that the MD field used to transmit the technical acknowledgment **shall** also contain the 4-bit (33-36) IIS subfield.

Note: *The interrogator may use the II code contained in the technical acknowledgment in order to verify that it has received the correct technical acknowledgment.*

2.2.21.3 Enhanced Downlink ELM Protocol

Note: *The enhanced downlink ELM protocol provides a higher data link capacity by permitting parallel delivery of downlink ELM messages by up to sixteen interrogators, one for each II code. Operation without the need for multisite downlink ELM reservations is possible in regions of overlapping coverage for interrogators equipped for the enhanced downlink ELM protocol. The protocol is fully conformant to the standard multisite protocol and thus is compatible with interrogators that are not equipped for the enhanced protocol.*

DRAFT © 2007 RTCA, Inc.

2.2.21.3.1 General

The interrogator **shall** determine from the data link capability report whether the transponder supports the enhanced protocols. If the enhanced protocols are supported, downlink ELMs delivered using the multisite-directed protocol may be delivered without a prior reservation. If the enhanced protocols are not supported by both the interrogator and the transponder, the multisite reservation protocols specified in §2.2.20.2.3.1 **shall** be used for multisite and multisite-directed downlink ELMs.

Recommendation: *If the transponder and the interrogator are equipped for the enhanced protocol, the interrogator should use the enhanced downlink ELM protocol.*

The transponder **shall** be capable of storing a sixteen-segment message for each of the 16 II codes.

2.2.21.3.2 Enhanced Multisite Downlink ELM Protocol

2.2.21.3.2.1 Initiation

A multisite message input into the transponder **shall** be stored in the registers assigned to II=0.

2.2.21.3.2.2 Announcement and Extraction

A waiting multisite downlink ELM message **shall** be announced in the DR field of the replies to all interrogators for which a multisite directed downlink ELM message is not waiting. The UM field of the announcement reply **shall** indicate that the message is not reserved for any II code, i.e., the IIS subfield **shall** be set equal to ZERO. When a command to read out this message is received from a given interrogator, the message **shall** be reserved for the II code contained in the interrogation from that interrogator. After readout and until closeout, the message **shall** continue to be assigned to that II code. Once a message is assigned to a specific II code, announcement of this message **shall** no longer be made in the replies to interrogators with other II codes. If the message is not closed out by the associated interrogator for the period of the D-timer, the message **shall** revert back to multisite status and the process **shall** repeat. Only one multisite downlink ELM message **shall** be in process at a time.

2.2.21.3.2.3 Closeout

A closeout for a multisite message **shall** only be accepted from the interrogator that was assigned most recently to transfer the message.

2.2.21.3.2.4 Announcement of the Next Message Waiting

The DR field **shall** indicate a message waiting in the reply to an interrogation containing a downlink ELM closeout if an unassigned multisite downlink ELM is waiting, or if a multisite directed message is waiting for that II code.

DRAFT © 2007 RTCA, Inc.

2.2.21.3.3 Enhanced Multisite Directed Downlink ELM Protocol

2.2.21.3.3.1 Initiation

When a multisite directed message is input into the transponder, it **shall** be placed in the downlink ELM registers assigned to the II code specified for the message. If the registers for this II code are already in use (i.e., a multisite directed downlink ELM message is already in process for this II code) the new message **shall** be queued until the current transaction with that II code is closed out.

2.2.21.3.3.2 Announcement

Announcement of a downlink ELM message waiting transfer **shall** be made using the DR field as specified in §2.2.20.2.1.1.1 with the destination interrogator II code contained in the IIS subfield as specified in §2.2.20.2.3.2. The DR field and IIS subfield contents **shall** be set specifically for the interrogator that is to receive the reply. A waiting multisite directed message **shall** only be announced in the replies to the intended interrogator. It **shall** not be announced in replies to other interrogators.

2.2.21.3.3.3 Delivery

An interrogator **shall** determine if it is the reserved site through coding in the UM field and, if so, it may proceed to request delivery of the downlink ELM. The delivery **shall** be performed as specified in §2.2.20.2.1.1.2. The transponder **shall** transmit the message contained in the buffer associated with the II code specified in the IIS subfield of the segment request interrogation.

2.2.21.3.3.4 Closeout

Closeout **shall** be accomplished as specified in §2.2.20.2.3.4 except that a message closeout **shall** only be accepted from the interrogator with an II code equal to the one that transferred the message.

2.2.21.3.3.5 Announcement of the Next Message Waiting

The DR field **shall** indicate a message waiting in the reply to an interrogation containing a downlink ELM close-out if another multisite directed message is waiting for that II code, or if a downlink message is waiting that has not been assigned an II code.

2.2.21.3.4 Enhanced Non-selective Downlink ELM Protocol

The availability of a non-selective downlink ELM message **shall** be announced to all interrogators. Otherwise, the protocol **shall** be as specified in §2.2.20.2.1.1.

DRAFT © 2007 RTCA, Inc.

2.2.22 TCAS-Compatible Mode S Transponder

In addition to the Level 2 Transponder capabilities defined in §2.2.19.1, the Mode S transponder used in conjunction with TCAS **shall** have the following capabilities:

a. Ability to handle the following formats:

Format Number	Format Name
UF=16	Long Special Surveillance Interrogation
DF=16	Long Special Surveillance Reply

b. Ability to receive long Mode S interrogations (UF=16) and generate long Mode S replies (DF=16) at a continuous rate of 16.6 milliseconds (60 per second).

Note: *Although item "b" above states the minimum requirement, in certain high density traffic situations, the transponder could receive "bursts" of UF=16 interrogations at a much higher rate. The theoretical upper limit for a burst is 120 UF=16 interrogations received in a 100-millisecond interval, with no more than 10 unique UF=16 interrogations in any 1-second interval and no more than 120 total UF=16 interrogations in any 1-second interval.*

c. Means for delivering the TCAS data content of all accepted interrogations addressed to the TCAS equipment.

d. Antenna diversity (see §2.2.12).

e. Mutual suppression capability

f. RF performance compatibility with own aircraft's TCAS. Specifically, when the Mode S transponder transmitter is in the inactive state, the RF power at 1090 MHz at the terminals of the Mode S transponder antenna **shall** not exceed -70 dBm.

Note: *This unwanted power restriction is necessary to insure that the Mode S transponder does not prevent TCAS from meeting its requirements. It assumes that the isolation between the transponder antenna and the TCAS antenna exceeds 20 dB. The resultant interference level at the TCAS RF port will then be below -90 dBm.*

g. Reply rate limiting for Mode S replies. The reply rate limiting device **shall** protect the transponder from over-interrogation while permitting at least the reply rates required in §2.2.13.3.1.c and §2.2.22.b above.

h. The ability to interface with both FAA TSO-C119A and RTCA/DO-185A compatible units.

An RTCA/DO-185A compatible transponder **shall** annunciate its capability to the on-board TCAS via the transponder/TCAS interface. Likewise, an RTCA/DO-185A compatible TCAS annunciates its capability to the on-board transponder via the transponder/TCAS interface. The capability of the transponder/TCAS system is then limited to the capability of either the transponder or the TCAS unit having the least capability.

DRAFT © 2007 RTCA, Inc.

The transponder **shall** consider the transponder/TCAS system to be compatible with RTCA/DO-185A if and only if both the TCAS and the transponder are compatible with RTCA/DO-185A.

2.2.22.1 Message Fields and Protocols

2.2.22.1.1 MA Message, Comm-A Used by TCAS

Note: *Control of the TCAS sensitivity level can be accomplished by one or more ground-based Mode S sensors through the transmission of Comm-A interrogations, UF=20 or 21, containing TCAS Sensitivity Level Command Messages to the TCAS aircraft. The interrogator identification information required to correlate the sensitivity level command with a particular originating ground-based Mode S sensor site is contained in the IIS subfield (see §2.2.19.2.1.1) of SD of the same Comm-A.*

Subfields in MA for a TCAS Sensitivity Level Command Message

ADS: A-Definition Subfield – This 8-bit (33-40) uplink subfield in MA defines the data contained in the remainder of MA. For convenience in coding, ADS is expressed in two groups of 4 bits each, ADS1, 33 through 36, and ADS2, 37 through 40. A TCAS Sensitivity Level Command Message **shall** use ADS1=0 and ADS2=5.

SLC: TCAS Sensitivity Level Command – This 4-bit (41-44) subfield contains a sensitivity level command for the TCAS aircraft.

The transponder **shall** monitor the TMS (see §2.2.19.2.1.1.c) and ADS subfields of Comm-A interrogations UF=20 and 21. If ADS1=0 and ADS2=5 and TMS=0, the IIS subfield of SD and the SLC subfield of MA **shall** be provided to the TCAS unit.

2.2.22.1.2 MB Message, Comm-B Used by TCAS

Airborne equipment **shall** use the MB field (see §2.2.14.4.20) of Comm-B replies to transmit a Resolution Advisories Report and a Data Link Capability Report to Mode S sensors.

2.2.22.1.2.1 Air-Initiated Downlink of RA Report

2.2.22.1.2.1.1 Air-Initiated Downlink of RA Report for All Transponder/TCAS Systems

The following requirements apply to all transponder/TCAS systems, i.e., both those that are compatible with RTCA/DO-185A, and those that are **NOT** compatible with RTCA/DO-185A.

Whenever TCAS reports that it has an active Resolution Advisory (RA), the transponder **shall** indicate that it has an RA Report awaiting downlink by setting the DR field in DF=4, 5, 20, 21 replies to DR=2, 3, 6, or 7 as appropriate.

Upon receipt of a DF=4, 5, 20, or 21 reply, with DR=2, 3, 6 or 7, a Mode S sensor may request downlink of the RA Report by setting RR=19 and DI≠7, or RR=19, DI=7 and RRS=0 in a surveillance or Comm-A interrogation (UF=4, 5, 20, or 21) to the TCAS

DRAFT © 2007 RTCA, Inc.

aircraft. When this request is received by own Mode S transponder, own transponder **shall** reply with a Comm B reply, DF=20, 21, whose MB field contains an RA Report with information previously provided to the transponder by the TCAS equipment.

While an RA is active, the content of the MB field in the RA Report **shall** be updated at least once every second. DR=2, 3, 6 or 7 **shall** remain set for 18 ±1 seconds following the end of the RA. In addition, the RA Report **shall** remain "frozen," i.e., **shall** retain the last ARA and the corresponding RAC, for 18 ±1 seconds following the end of the RA, unless superseded by a new ARA.

Subfields in MB for RA Report

BDS: B-Definition Subfield – This 8-bit (33-40) subfield indicates that a RA Report is contained in MB by BDS1=3 and BDS2=0, the combination of which is equivalent to BDS=48.

ARA: Active Resolution Advisories – This 14-bit (41-54) subfield indicates the currently active RAs (if any) generated by own TCAS unit against one or more threat aircraft.

RAC: Resolution Advisory Complements – This 4-bit (55-58) subfield indicates the currently active RA complements (if any) received from other TCAS aircraft equipped with on-board resolution capability.

2.2.22.1.2.1.2 Air-Initiated Downlink of RA Report for FAA TSO-C119A Compatible Systems

The following requirements apply to all FAA TSO-C119A compatible transponder/TCAS systems in addition to the requirements provided in §2.2.22.1.2.1.1.

An active RA is identified as being any NON-ZERO ARA.

2.2.22.1.2.1.3 Air-Initiated Downlink of RA Report for RTCA/DO-185A Compatible Systems

The following requirements apply to all RTCA/DO-185A compatible transponder/ TCAS systems in addition to the requirements provided in §2.2.22.1.2.1.1.

Subfields in MB for RA Report

BDS: B-Definition Subfield – Additional Information

When BDS1=3 and BDS2 =0, the subfields indicated below are contained in MB. For 18 ±1 seconds following the end of an RA, all MB subfields in the RA report with the exception of bit 59 (RAT) **shall** retain the information reported at the time the RA was last active.

Except for the RAT bit, the following subfields are provided to the transponder by the TCAS for application in the RA Report.

RAT: Resolution Advisory Terminated Indicator – This 1-bit (59) subfield **shall** be set by the transponder to indicate when an RA previously generated by TCAS has ceased being generated. RAT **shall** be set in accordance with the following:

DRAFT © 2007 RTCA, Inc.

0 = The RA indicated by the ARA subfield is currently active. The transponder **shall** set RAT to ZERO at all times except those defined for RAT =1.

1 = The RA indicated by the ARA subfield has been terminated. RAT **shall** be set to ONE for 18 ±1 seconds following termination of a previously reported RA. Termination of the RA may result from any of the following:

a. Notification of termination of the RA received from own on-board TCAS.

b. Notification of loss of capability received from own on-board TCAS, i.e., TCAS declaration of interface failure.

c. Transponder declaration of interface failure.

The transponder **shall** monitor the 1-bit RA Indicator (RAI) from TCAS to determine whether there is an active RA. RAI is set to ZERO by TCAS to indicate that there is an active RA. Otherwise, RAI is set to ONE by TCAS. Termination of the RA is indicated by the transition of RAI from ZERO to ONE.

Note: *The RAT bit is used to indicate that the RA has been terminated. It may be used, for example, to permit removal of an RA indication from an Air Traffic Control display, or for assessment of RA duration within a particular airspace.*

MTE: Multiple Threat Encounter – This 1-bit (60) subfield indicates whether two or more simultaneous threats are currently being processed by the TCAS threat resolution logic.

TTI: Threat Type Indicator – This 2-bit (61-62) subfield defines the type of identity data contained in the TID subfield (see §2.2.22.1.2.1.3).

TID: Threat Identity Data – This 26-bit subfield (63-88) contains the Mode S address of the threat if the threat is equipped with a Mode S transponder. If the threat is not equipped with a Mode S transponder, then this subfield contains the altitude, range, and bearing of the threat.

If two or more threats are simultaneously being processed by the TCAS threat resolution logic, the TID subfield contains the identity or position data for the most recently declared threat.

If TTI=1, the TID subfield contains the Mode S address of the threat in bits 63 through 86, and bits 87 through 88 are set to ZERO.

If TTI=2, the TID subfield contains the following three subfields.

TIDA: Threat Identity Data, Altitude – This 13-bit subfield (63-75) contains the most recently reported Mode-C altitude code of the threat. Coding of the TIDA subfield is consistent with the coding of the Mode-C Altitude reply.

TIDR: Threat Identity Data, Range – This 7-bit subfield (76-82) contains the most recent range of the threat estimated by TCAS.

DRAFT © 2007 RTCA, Inc.

TIDB: Threat Identity Data, Bearing – This 6-bit subfield (83-88) contains the most recent bearing of the threat estimated by TCAS, relative to the TCAS aircraft heading.

2.2.22.1.2.2 Data Link Capability Codes in MB

2.2.22.1.2.2.1 Data Link Capability Codes in MB for All Transponder/TCAS Systems

Notes:

1 The ground-based Mode S sensor learns of the specific data link capabilities on board the aircraft by using the data link capability report protocol specified in §2.2.19.1.12.5, §2.2.19.1.12.6, §2.2.19.1.12.7, and §2.2.19.1.12.8.

2. The data bits discussed in the following subparagraphs are modified in the MB field of the Data Link Capability Report by the Mode S transponder such that the data appears appropriately in response to a request for Data Link Capability Report when BDS1=1 and BDS2=0. As such, these data bits comprise only a small fraction of the entire Data Link Capability Report which may collate data from multiple sources for transfer in the downlink. Care must be taken to ensure that the data fields discussed in the following subparagraphs are not compromised when other sources attempt to update the Data Link Capability Report, and that updating of these bits does not compromise other parts of the Data Link Capability Report.

2.2.22.1.2.2.2 Data Link Capability Codes in MB for FAA TSO-C119A Compatible Systems

The following requirements apply to all FAA TSO-C119A compatible transponder/TCAS systems.

The Mode S transponder **shall** process the TCAS-supplied capability information (RI) for inclusion in the Data Link Capability Report. This capability information **shall** cause the transponder to set the following codes in a Data Link Capability Report:

Bit Codes in MB for Data Link Capability Report

The following codes **shall** appear in the MB field for a Data Link Capability Report when BDS1=1 and BDS2=0.

Bit 48 equals 1 indicates that the transponder/TCAS interface is operational and the transponder is receiving TCAS RI=2, 3 or 4.

Bits 69 and 70 form a capability code subfield which indicates the aircraft's on-board resolution advisory generation capability.

DRAFT © 2007 RTCA, Inc.

The codes are:

Bit 69	Bit 70	Meaning
0	0	No on-board resolution advisory generation capability (TCAS RI not equal to 3 or 4, or no operational interface.)
0	1	An on-board vertical-only resolution advisory generation capability exists (TCAS RI=3)
1	0	An on-board vertical and horizontal resolution advisory generation capability exists (TCAS RI=4)
1	1	Not assigned

2.2.22.1.2.2.3 Data Link Capability Codes in MB for RTCA/DO-185A Compatible Systems

The following requirements apply to all RTCA/DO-185A compatible transponder/TCAS systems.

Bits 48, 69, 70, 71, and 72 are provided to the transponder by the TCAS and **shall** appear in the MB field for a Data Link Capability Report when BDS1=1 and BDS2=0.

Notes:

1. *Bit 71 set to ONE indicates that the transponder/TCAS system is compatible with RTCA/DO- 185A.*

2. *Bit 72 is "Reserved" for future use by TCAS and/or the transponder. Until appropriate coding of this bit has been defined, it should be set to "0" by the TCAS.*

If the transponder detects a failure of the transponder/TCAS interface, then the transponder **shall** ensure that Bits 48, 69, 70, 71, and 72 are set to ZERO in the Data Link Capability Report.

2.2.22.1.2.3 Additional MB Message Reserved for RTCA/DO-185A Compatible Systems

An RTCA/DO-185A compatible TCAS has the capability of sending the transponder a 56-bit message for storage into one of the Ground-Initiated Comm-B (GICB) registers. When operating in an RTCA/DO-185A compatible system, the transponder **shall** store the TCAS-supplied 56-bit message into the specified transponder GICB register. The GICB register specified for this purpose is 0F {HEX}.

Notes:

1. *The actual structure and coding of the TCAS MB Message is not specified in this document and may be defined in the future. It is the intent of RTCA/DO-185A compatible systems that the transponder/TCAS interface be implemented in a manner such that the TCAS can directly format the designated MB message and thereby alleviate the need for the transponder to know the exact structure and coding of the message.*

2. *Transponders designed for use in RTCA/DO-185A compatible systems should allow for future use of other MB messages sent by TCAS.*

DRAFT © 2007 RTCA, Inc.

2.2.22.1.3 MU Message, Comm-U Used by TCAS

The Mode S transponder **shall** supply the MU field (see §2.2.14.4.25) of a long special surveillance interrogation, UF=16, to TCAS only under the following conditions:

a. The interrogation contains the transponder's discrete address and UDS=48.

b. The interrogation contains the broadcast address (all ONES) and UDS=50

Notes:

1. The MU field is used by TCAS to transmit a TCAS Broadcast Interrogation Message containing own transponder's address for the purpose of controlling interference caused by TCAS interrogations, or to transmit a TCAS Resolution Message for air-to-air resolution advisory coordination.

2. Ideally the transponder should serve as a modem for TCAS and supply the entire MU field to TCAS (including the UDS Field) of any received UF=16 interrogation. Currently implemented transponder/TCAS interface protocols do not provide the UDS Field information to TCAS so it is necessary for these transponders to select the UDS messages that are passed to TCAS. If this interface limitation is removed in the future, then all UDS messages would be passed to TCAS.

Subfield in MU for a TCAS Resolution Message

UDS: U-Definition Subfield – This 8-bit (33-40) subfield defines the data content and coding in the remainder of the MU field. For convenience in coding, UDS is expressed in two groups of 4 bits each; UDS1, 33 through 36, and UDS2, 37 through 40. TCAS Resolution Messages **shall** be identified by UDS1=3 and UDS2=0, the combination of which is equivalent to UDS=48.

Subfield in MU for a TCAS Broadcast Message

UDS: U-Definition Subfield – A TCAS Broadcast Interrogation Message is identified by UDS1=3 and UDS2=2, the combination of which is equivalent to UDS=50.

2.2.22.1.4 MV Message, Comm-V Used by TCAS

2.2.22.1.4.1 MV Message, Comm-V Used by FAA TSO-C119A Compatible Systems

Upon acceptance of a UF=16 containing a TCAS Resolution Message from a threat TCAS aircraft, the Mode S transponder **shall** transmit a long special surveillance reply, DF=16, to the requesting aircraft. The MV field of this reply **shall** contain a Coordination Reply Message with information previously provided by own TCAS.

Subfields in MV for a Coordination Reply Message

ARA: Active Resolution Advisories – This 14-bit (41-54) subfield as described in §2.2.22.1.2.1.1.

RAC: Resolution Advisory Complements – This 4-bit (55-58) subfield as described in §2.2.22.1.2.1.1.

DRAFT © 2007 RTCA, Inc.

VDS: V-Definition Subfield – This 8-bit (33-40) subfield defines the content and coding in the remainder of MV. For convenience in coding, VDS is expressed in two groups of 4 bits each; VDS1, 33 through 36, VDS2, 37 through 40. The airborne TCAS equipment is a source of long special reply MV messages containing the VDS1=3 code. A Coordination Reply Message is identified by VDS1=3 and VDS2=0, the combination of which is equivalent to VDS=48.

2.2.22.1.4.2 MV Message, Comm-V Used by RTCA/DO-185A Compatible Systems

In addition to the requirements provided in §2.2.22.1.4.1, a RTCA/DO-185A compatible system **shall** provide the following:

Subfields in MV for a Coordination Reply Message

RAT: Resolution Advisory Terminated Indicator – This 1-bit (59) subfield as described in §2.2.22.1.2.1.3.

MTE: Multiple Threat Encounter – This 1-bit (60) subfield as described in §2.2.22.1.2.1.3.

2.2.22.1.5 RI Air-to-Air Reply Information

This 4-bit (14-17) downlink field **shall** be included in special surveillance formats DF=0, 16. This field **shall** contain information pertaining to replying aircraft. Where airspeed is reported (see §2.2.14.4.33), the maximum true airspeed flown in normal operations **shall** be given using the coding shown below.

In addition to the RI coding in §2.2.14.4.33, a TCAS-Compatible Mode S transponder **shall** be capable of receiving additional RI codes from own TCAS for inclusion in special surveillance formats DF=0, 16 for replies to non-acquisition interrogations.

The codes are:

Code	Meaning
0	No on-board TCAS
1	Not assigned
2	On-board TCAS with resolution capability inhibited
3	On-board TCAS with vertical-only resolution capability
4	On-board TCAS with vertical and horizontal resolution capability
5 – 7	Not assigned
8	No maximum airspeed data available
9	Airspeed is less than or equal to 75 knots
10	Airspeed is greater than 75 and less than or equal to 150 knots
11	Airspeed is greater than 150 and less than or equal to 300 knots
12	Airspeed is greater than 300 and less than or equal to 600 knots
13	Airspeed is greater than 600 and less than or equal to 1200 knots
14	Airspeed is greater than 1200 knots
15	Not assigned

DRAFT © 2007 RTCA, Inc.

The following protocol **shall** apply:

On receipt of a short special interrogation, UF=0, or a long special interrogation, UF=16, the interrogated Mode S transponder **shall** reply with a short special reply, DF=0, or a long special reply, DF=16, depending on the code contained in the RL field of the interrogation. In this reply, the sensitivity level and the air-to-air reply information **shall** be supplied in the SL and RI fields. The Mode S transponder **shall** transmit the SL field supplied by TCAS to indicate the sensitivity level at which TCAS is currently operating.

Bit 14 of the RI field replicates the AQ bit (see §2.2.14.4.5) of the interrogation. That is, codes 0-7 are supplied by TCAS for use in the reply to an air-to-air non-acquisition interrogation; codes 8-15 (indicating aircraft maximum airspeed) **shall** be supplied by the Mode S transponder for use in the reply to an acquisition interrogation. For a reply to a non-acquisition interrogation, the Mode S transponder **shall** set the RI field to 0 to indicate a non-operational TCAS if the conditions for setting bit 48 to 1 (see §2.2.22.1.2.2) are not satisfied. If RI=0, the SL field has no meaning.

2.2.22.2 General Requirements of the Mode S Interface to the TCAS Equipment

2.2.22.2.1 Delivery of Messages

The transponder **shall** transmit a valid Coordination Reply Message in response to an incoming TCAS Resolution Message if, and only if, current transponder indications show that the incoming message can be delivered to the TCAS unit. If the transponder recognizes a valid incoming TCAS Resolution Message but does not send a valid Coordination Reply Message, all data in the incoming message **shall** be discarded.

Note: *This requirement implies that the manufacturer must determine the rate at which incoming interrogations can actually be accepted by the transponder (generally a rate much greater than §2.2.22.b) and the rate at which these interrogations can be passed to the TCAS unit and, if necessary, provide a queuing mechanism to ensure that accepted interrogations are not lost. The transponder must be able to monitor the status of the queue and the status of any other relevant internal structures or pathways so as not to accept new TCAS Resolution Messages if the queue is full or if there is some other condition that would prevent delivery to the TCAS unit (e.g., the transponder/TCAS interface is not established or has failed or TCAS is indicating no resolution capability).*

If the transponder cannot accept the incoming TCAS Resolution Message contained in the MU field of a long special surveillance interrogation UF=16, the transponder **shall** either (a) not reply to this interrogation, or (b) reply with a long special surveillance reply DF=16 with all 56 bits of the MV field equal to 0.

2.2.22.2.2 Data Integrity

The interface between TCAS and the transponder **shall** be designed to provide communication in the normal operational aircraft environment for that class of TCAS equipment while assuring error rates of less than one detected error in 10^5 bit transmissions and less than one undetected error in 10^9 bit transmissions for transfers in either direction. Compliance with this requirement **shall** be demonstrated either by direct test in a simulated operational environment or by analysis based on the known characteristics of proven interface techniques.

DRAFT © 2007 RTCA, Inc.

The Mode S transponder **shall** monitor the status of the communications interface with own TCAS. A detected failure in the interface **shall** be recognized by the transponder as a loss of integrity and **shall** be treated as a TCAS failure (see §2.2.22.1.5 and §2.2.19.1.12.5).

Note: *Incomplete data transmission can result in erroneous execution of the TCAS logic algorithms.*

2.2.22.2.3 TCAS Failure Data Handling

When a TCAS failure is detected, the transponder **shall** set all areas for storage of TCAS data to ZERO.

2.2.22.2.4 Communication Timing

TCAS Resolution Messages that are received by the transponder **shall** be delivered to the TCAS unit (received by TCAS from the TCAS/transponder interface) within 0.01 second of receipt by the transponder.

Note: *This requirement assumes the transponder input message rate of one message every 16.6 milliseconds (60 per second).*

2.2.22.3 Data Provided by TCAS Equipment to the Mode S Transponder

2.2.22.3.1 Data Contained in the Special Surveillance Replies (DF=0, 16)

a. Contents of the SL Field

The Mode S transponder **shall** report a changed value of the sensitivity level in the SL field in any special surveillance reply, DF=0, 16 generated no later than 250 milliseconds after receipt of the changed SL value from TCAS.

b. Contents of the RI Field

The TCAS equipment provides a value for downlink transmission by the transponder in the RI field whenever the corresponding UF=0 or 16 interrogation contains AQ=0 (tracking interrogation). The Mode S transponder **shall** report a changed resolution capability in any special surveillance reply, DF=0, 16 generated no later than one second after receipt of the changed RI value from TCAS.

2.2.22.3.2 Data Contained in the Long Special Surveillance Reply (DF=16)

When the Mode S transponder receives a long special surveillance interrogation (UF=16) with RL=1 and UDS=48 in the MU field, the transponder **shall** reply with a long special surveillance reply, DF=16. This reply **shall** contain a Coordination Reply Message (see §2.2.22.1.4), the contents of which were provided previously by the TCAS equipment.

DRAFT © 2007 RTCA, Inc.

2.2.22.3.3 Data Contained in Altitude and Identity Surveillance and Comm-B Replies (DF=4, 5, 20, 21)

Contents of the DR Field

The TCAS equipment provides a continuous indication to the Mode S transponder whenever a TCAS resolution advisory exists. This **shall** cause the transponder to set either code 2, 3, 6 or 7 in the DR field (see §2.2.14.4.12) within one second of first receipt of this indication.

2.2.22.3.4 Data Contained in the Altitude and Identity Comm-B Reply (DF=20, 21)

a. Resolution Advisories Report

When the Mode S transponder receives an altitude or identity surveillance or Comm-A interrogation, UF=4, 5, 20 or 21 with RR=19, the transponder **shall** reply with a Comm-B, DF=20, 21. This reply **shall** contain a Resolution Advisories Report (§2.2.22.1.2.1).

b. Data Link Capability Report

The TCAS equipment indicates to the Mode S transponder its resolution capabilities, which the transponder **shall** include in the Data Link Capability Report (see §2.2.22.1.2.2).

Note: *§2.2.19.1.12.8 specifies that the transponder will recognize a change in on-board data link capability and will automatically set DR=4, 5, 6 or 7, causing the ground system to read out a new Data Link Capability Report.*

2.2.22.4 Data Provided by the Mode S Transponder to the TCAS Equipment

The transponder **shall** provide the following data to the TCAS equipment:

a. The aircraft discrete address,

b. The aircraft pressure altitude from the source that is the basis for own altitude in Mode S replies,

c. Quantization for pressure altitude (fine or coarse, where fine is defined to be 10 feet or less, and coarse is defined to be greater than 10 feet).

When selecting the altitude source used for Mode S replies and for TCAS, the transponder **shall** use the source that is valid and provides the finest quantization. The altitude data **shall** be provided to TCAS at the finest quantization available.

2.2.22.5 TCAS-Compatible Transponder Automatic Performance Monitoring

The transponder **shall** be capable of detecting malfunctions in the Mode S transponder system that would degrade TCAS functioning and upon detection **shall** make this information available to TCAS.

DRAFT © 2007 RTCA, Inc.

2.2.23 Extended Squitter (ES)

2.2.23.1 ADS-B Extended Squitter

Mode S transponders **shall** have the capability to transmit Extended Squitters to support the broadcast of aircraft-derived position, identification and state information.

Note: *The broadcast of this type of information is a form of Automatic Dependent Surveillance (ADS) known as ADS-Broadcast or ADS-B.*

2.2.23.1.1 Extended Squitter Format

The format used for the Extended Squitter **shall** be the 112-bit downlink format DF=17 using II=0 and SI=0 in generating the PI field (§2.2.14.4.30).

2.2.23.1.2 Extended Squitter Types

a. Airborne Position Squitter. The airborne position Extended Squitter **shall** use format DF=17 with the contents of ground-initiated Comm-B register 05 {HEX} inserted in the ME field.

Note: *A GICB request (see §2.2.19.1.12.3) containing RR equals 16, DI equals 7 and RRS equals 5 will cause the resulting reply to contain the airborne position report in its MB field.*

b. Surface Position Squitter. The surface position Extended Squitter **shall** use format DF=17 with the contents of ground-initiated Comm-B register 06 {HEX} inserted in the ME field.

Note: *A GICB request (see §2.2.19.1.12.3) containing RR equals 16, DI equals 7 and RRS equals 6 will cause the resulting reply to contain the surface position report in its MB field.*

c. Aircraft Identification Squitter. The aircraft identification Extended Squitter **shall** use format DF=17 with the contents of ground-initiated Comm-B register 08 {HEX} inserted in the ME field.

Note: *A GICB request (see §2.2.19.1.12.3) containing RR equals 16, DI equals 7 and RRS equals 8 will cause the resulting reply to contain the aircraft identification report in its MB field.*

DRAFT © 2007 RTCA, Inc.

d. Airborne Velocity Squitter. The airborne velocity Extended Squitter **shall** use format DF=17 with the contents of GICB register 09 {HEX} inserted in the ME field.

Note: *A GICB request (see §2.2.19.1.12.3) containing RR equals 16, DI equals 7 and RRS equals 9 will cause the resulting reply to contain the airborne velocity report in its MB field.*

e. Event-driven Squitter. The event-driven Extended Squitter **shall** use format DF=17 with the contents of GICB register 0A {HEX} inserted in the ME field.

Note: *A GICB request (see §2.2.19.1.12.3) containing RR equals 16, DI equals 7 and RRS equals 0A will cause the resulting reply to contain the event-driven report in its MB field.*

2.2.23.1.3 Extended Squitter Rate

a. Initialization. At power up initialization, the transponder **shall** commence operation in a mode in which it broadcasts only acquisition squitters (see §2.2.18.2.6). The transponder **shall** initiate the broadcast of Extended Squitters for airborne position, surface position, airborne velocity and aircraft identification when data are inserted into GICB registers 05, 06, 09 and 08{HEX} respectively. This determination **shall** be made individually for each squitter type. The insertion of altitude data into register 05 by the transponder (see §2.2.23.1.8) **shall** not satisfy the minimum requirement for broadcast of the airborne position squitter.

Note 1: *This suppresses the transmission of Extended Squitters from aircraft that are unable to report position, velocity or identity information.*

If input to the register for a squitter type stops for 60 seconds, broadcast of that Extended Squitter type will be discontinued until data insertion is resumed. The insertion of altitude by the transponder **shall** satisfy the minimum requirement for continuing to broadcast the airborne position squitter. After timeout (see §2.2.23.1.4.2), this squitter type may contain an ME field of all zeroes.

Note 2: *Continued transmission for 60 seconds is required so that receiving aircraft will know that the data source for the message has been lost.*

When Extended Squitters are broadcast, transmission rates **shall** be as indicated in the following paragraphs. Acquisition squitters **shall** be reported in addition to Extended Squitters as specified in §2.2.18.2.6.c. Acquisition squitters **shall** always be reported if no Extended Squitters are reported.

b. Airborne Position Squitter Rate. Airborne position squitter transmissions **shall** be emitted as specified in §2.2.23.1.5 at random intervals that are uniformly distributed over the range from 0.4 to 0.6 seconds using a time quantization no greater than 15 milliseconds relative to the previous airborne position squitter, with the exceptions as specified in subparagraph g.

c. Surface Position Squitter Rate. Surface position squitter transmissions **shall** be emitted as specified in §2.2.23.1.5 using one of two rates depending upon whether the high or low squitter rate has been selected (see §2.2.23.1.6). When

DRAFT © 2007 RTCA, Inc.

the high squitter rate has been selected, surface position squitters **shall** be emitted at random intervals that are uniformly distributed over the range from 0.4 to 0.6 seconds using a time quantization no greater than 15 milliseconds relative to the previous surface position squitter (termed the high rate). When the low squitter rate has been selected, surface position squitters **shall** be emitted at random intervals that are uniformly distributed over the range of 4.8 to 5.2 seconds using a time quantization no greater than 15 milliseconds relative to the previous surface position squitter (termed the low rate) Exceptions to this transmission rate are specified in subparagraph g.

Notes:

1. High and low squitter rate status is determined on board the aircraft.

2. The low rate is used when the aircraft is stationary and the high rate is used when the aircraft is moving.

d. Aircraft Identification Squitter Rate. Aircraft identification squitter transmissions **shall** be emitted at random intervals that are uniformly distributed over the range of 4.8 to 5.2 seconds using a time quantization no greater than 15 milliseconds relative to the previous identification squitter when the aircraft is reporting the airborne position squitter, or when the aircraft is reporting the surface position squitter and the high surface squitter rate has been selected. When the surface position squitter is being reported at the low surface rate, the aircraft identification squitter **shall** be emitted at random intervals that are uniformly distributed over the range of 9.8 to 10.2 seconds using a time quantization no greater than 15 milliseconds relative to the previous identification squitter. Exceptions to these transmission rates are specified in subparagraph g.

e. Airborne Velocity Squitter Rate. Airborne velocity squitter transmissions **shall** be emitted as specified in §2.2.23.1.5 at random intervals that are uniformly distributed over the range from 0.4 to 0.6 seconds using a time quantization no greater than 15 milliseconds relative to the previous velocity squitter, with the exceptions as specified in subparagraph g.

f. Event-driven Squitter Rate. The event-driven squitter **shall** be transmitted once, each time that GICB register 0A {HEX} is loaded, while observing the delay conditions specified in subparagraph g. The maximum transmission rate for the event-driven squitter **shall** be limited by the transponder to twice per second. If a message is inserted in the event-driven register and cannot be transmitted due to rate limiting, it **shall** be held and transmitted when the rate limiting condition has cleared If a new message is received before transmission is permitted, it **shall** overwrite the earlier message.

Note: *The squitter transmission rate and the duration of squitter transmissions is application dependent. Choices made should be the minimum rate and duration consistent with the needs of the application.*

g. Delayed Transmission. Extended squitter transmission **shall** be delayed in the following circumstances:

(1) the scheduled Extended Squitter **shall** be delayed if the transponder is in a transaction cycle (see §2.2.18.2.2.k); or

DRAFT © 2007 RTCA, Inc.

(2) the scheduled Extended Squitter **shall** be delayed if an acquisition or another type of Extended Squitter is in process; or

(3) the scheduled Extended Squitter **shall** be delayed if a mutual suppression interface is active.

Note: *A mutual suppression system may be used to connect on-board equipment operating in the same frequency band in order to prevent mutual interference. Squitter action resumes as soon as practical after a mutual suppression interval.*

The delayed squitter **shall** be transmitted as soon as the condition causing the delay no longer exists.

2.2.23.1.4 Transponder Support for Extended Squitter Registers

2.2.23.1.4.1 Data Insertion

When the transponder determines that it is time to emit an airborne position squitter, it **shall** insert the current value of the barometric altitude (unless inhibited by the ATS subfield, §2.2.23.1.9) and surveillance status into the appropriate fields of register 05 {HEX}. The contents of this register **shall** then be inserted into the ME field of DF=17 and transmitted.

Note: *Insertion in this manner ensures that (1) the squitter contains the latest altitude and surveillance status, and (2) ground readout of register 05 {HEX} will yield exactly the same information as contained in the previous squitter.*

2.2.23.1.4.2 Register Timeout

The transponder **shall** clear all 56-bits of the airborne position, surface position, squitter status and velocity GICB registers 05, 06, 07 and 09 {HEX} if these registers are not updated within two seconds of the previous update. This timeout **shall** be determined separately for each of these registers. The internal insertion of data by the transponder into these registers (altitude and surveillance status) **shall** not qualify as a register update for the purposes of this timeout condition.

Notes:

1. These registers are cleared to prevent the reporting of outdated position, velocity and squitter rate information.

2. The identification register, 08 {HEX}, is not cleared since it contains data that rarely changes in flight and less frequently updated. The event-driven register, 0A {HEX} does not need to be cleared since its contents are only broadcast once each time that the register is loaded.

Transponder data insertion and squitter transmission **shall** not be affected by a register timeout event except as specified in §2.2.23.1.3.a.

Note 3: *During a register timeout event, the ME field of the Extended Squitter may contain all zeroes, except for any data inserted by the transponder.*

DRAFT © 2007 RTCA, Inc.

2.2.23.1.5 Airborne/Surface Format Selection

2.2.23.1.5.1 Automatic Format Selection

Aircraft with an automatic means of determining on-the-ground condition **shall** use this input to select whether to report the airborne (airborne position and airborne velocity) or surface (surface position) message types, except airborne format is selected if airborne status is determined when the input indicates on-the-ground condition as specified in §2.2.18.2.7.

2.2.23.1.5.2 Ground Controlled Format Selection

Aircraft without such automatic means **shall** report the airborne type messages. Aircraft with or without such automatic on-the-ground determination **shall** use position message types as commanded by control codes in the TCS subfield (see §2.2.23.1.7). After timeout of the TCS commands, control of airborne/ surface formats **shall** revert to the means described above.

Note 1: *Extended squitter ground stations determine aircraft airborne or on-the-ground state by monitoring aircraft position, altitude and ground speed. Aircraft determined to be on-the-ground that are not reporting the surface position message may be commanded to report the surface format via the TCS subfield. The normal return to the airborne position messages is via a ground command to report the airborne type messages. To guard against loss of communications after takeoff, commands to report the surface position message automatically timeout.*

When commanded to report the surface format by TCS commands, aircraft without automatic means of determining the on-the-ground condition, and aircraft with such means that are reporting airborne state, **shall** transmit acquisition squitters as specified in §2.2.18.2.6.a.

Note 2: *Transmission of the acquisition squitter will provide for TCAS acquisition in the event that an airborne aircraft is commanded to report the surface type. In this case, the CA field of the acquisition and Extended Squitters will continue to show that the aircraft is airborne, or is unable to determine its on-the-ground state.*

2.2.23.1.6 Surface Squitter Rate Control

Surface squitter rate **shall** be determined as follows:

a. Once per second the contents of the TRS (see §2.2.23.1.9) **shall** be read. If the value of TRS is 0 or 1, the transponder **shall** transmit surface squitters at the high rate. If the value of TRS is 2, the transponder **shall** transmit surface squitters at the low rate.

b. The squitter rate determined via the TRS subfield **shall** be subject to being overridden by commands received via the RCS subfield (see §2.2.23.1.7). RCS code 1 **shall** cause the transponder to squitter at the high rate for 60 seconds.

DRAFT © 2007 RTCA, Inc.

RCS code 2 **shall** cause the transponder to squitter at the low rate for 60 seconds. These commands **shall** be able to refreshed for a new 60 second period before timeout of the prior period.

c. After timeout and in the absence of RCS codes 1 and 2, control **shall** return to the TRS subfield.

2.2.23.1.7 Subfields in SD for Extended Squitter

The SD field contains the following information if the DI code is 2:

TCS, the 3-bit (21-23) Type Control Subfield in SD **shall** control the position type reported by the transponder. These commands **shall** only affect the format type reported, they **shall** not change the aircraft determination of its on-the-ground condition. The commands for codes 1 and 2 **shall** be able to refreshed for a new period before timeout of the prior period.

Note 1: *Thus aircraft without the means to set the on-the-ground condition will continue to report code 6 in the CA field, and an aircraft with the means to set the on-the-ground condition that has determined that it is in the airborne state will continue to set code 5, independent of the Extended Squitter format that is emitted.*

The following codes have been assigned:

Code	Description
0	No position type command
1	Use surface position type for the next 15 seconds
2	Use surface position type for the next 60 seconds
3	Cancel surface type command
4 – 7	Not assigned

RCS, the 3-bit (24-26) Rate Control Subfield in SD **shall** control the squitter rate of the transponder when it is reporting the surface format. This subfield **shall** have no effect on the transponder squitter rate when it is reporting the airborne position type of Extended Squitter.

Note 2: *Aircraft without the means of determining on-the-ground state or aircraft with such means that are declaring the airborne state must be commanded to transmit the surface format (via TCS) before they can be controlled by this subfield. Both of these commands may be sent in the same interrogation.*

Note 3: *Both TCS and RCS have specific timeout periods. If the surface format command times out first, the aircraft will resume broadcasting the airborne format (unless it is now declaring the on-the-ground state) even if the squitter suppression command has not timed out (since the squitter suppression command has no effect on the transmission of the airborne format). If the squitter suppression command times out first, the aircraft will resume the transmission of surface squitters.*

DRAFT © 2007 RTCA, Inc.

The following codes have been assigned:

Code	Description
0	No squitter rate command
1	Report high surface squitter rate for 60 seconds
2	Report low surface squitter rate for 60 seconds
3	Suppress all surface squitters for 60 seconds
4	Suppress all surface squitters for 120 seconds
5 – 7	Not assigned

Acquisition squitters **shall** be emitted during the time period when Extended Squitters are inhibited as specified in §2.2.18.2.6.c.

Note 4: *The definition of high and low squitter rate is given in §2.2.23.1.3.*

SAS, the two bit (27-28) surface antenna subfield in SD **shall** control the selection of the diversity antenna that is used for (1) the Extended Squitter when it is reporting the surface format, and (2) the acquisition squitter when the aircraft is reporting the on-the-ground condition. This subfield **shall** have no effect on the transponder diversity antenna selection when the aircraft is reporting the airborne status type, or if the aircraft does not have diversity antennas. When reporting the surface format, the default **shall** be the top antenna. The following codes have been assigned:

Code	Description
0	No antenna command
1	Alternate top and bottom antennas for 120 seconds
2	Use bottom antenna for 120 seconds
3	Return to the default

2.2.23.1.8 Subfields in ME for Extended Squitter

SSS, the 2-bit (38-39) Surveillance Status Subfield in ME **shall** report the surveillance status of the transponder when this field contains the airborne position squitter report. The following codes have been assigned:

Code	Description
0	No status information
1	Transponder reporting permanent alert condition (§2.2.18.2.7.a)
2	Transponder reporting a temporary alert condition (§2.2.18.2.7.a)
3	Transponder reporting SPI condition (§2.2.18.2.7.c)

Codes 1 and 2 **shall** take precedence over code 3.

ACS, the 12-bit (41-52) Altitude Code Subfield in ME **shall** (under control of the ATS subfield, §2.2.16.2.6.2.9) report the barometric altitude when this field contains an airborne position report. The contents of the ACS subfield **shall** be as specified for the 13-bit AC field (§2.2.14.4.2) except that the M bit (bit 26) **shall** be omitted. When barometric altitude is being reported, the contents of the ACS subfield **shall** be inserted by the transponder from the same source that would be used to provide the altitude field

DRAFT © 2007 RTCA, Inc.

of a reply to a discrete interrogation. Transponder insertion of altitude data in the ACS subfield **shall** take place when the 1-bit ATS subfield has the value of ZERO. Transponder insertion of altitude data in the ACS subfield **shall** be inhibited when the ATS subfield has the value ONE.

Note: *An ATS subfield of ONE is provided for the future use of navigation-derived height (derived external to the transponder) in place of transponder provided barometric altitude.*

2.2.23.1.9 Subfields in MB for Extended Squitter

A ground-initiated Comm-B request (§2.2.19.1.12.3) containing RR equals 16 and DI equals 7 and RRS equals 7 **shall** cause the resulting reply to contain the Squitter Capability Report in its MB field.

TRS, the 2-bit (33-34) Transmission Rate Subfield in the Squitter Capability Report **shall** report the capability of the aircraft to automatically determine its surface squitter rate and its current squitter rate.

The following codes have been assigned:

Code	Description
0	No capability to automatically determine surface squitter rate
1	Aircraft has selected the high surface squitter rate
2	Aircraft has selected the low surface squitter rate
3	Unassigned

Note 1: *High and low squitter rate status is determined on board the aircraft.*

Note 2: *The low rate is used when the aircraft is stationary and the high rate is used when the aircraft is moving.*

ATS, the 1-bit Altitude Type Subfield in the Squitter Capability Report **shall** report the type of altitude being provided in the airborne Extended Squitter in the 1-bit (35) ATS subfield of MB when the reply contains the contents of transponder register 07 {HEX}.

The following codes have been assigned:

0 = barometric altitude is being reported
1 = navigation-derived height is being reported

Note 3: *ATS is set external to the transponder function.*

2.2.23.2 Event-Driven Squitter

TBD – use RA Broadcast materials form the SARPs ??

DRAFT © 2007 RTCA, Inc.

2.2.23.3 Extended Squitter/Non Transponder Devices

Note: *This format supports the broadcast of Extended Squitter ADS-B Messages by a non-Mode S transponder device, i.e., it is not incorporated into a Mode S transponder. A separate format is used to clearly identify this non-transponder case to prevent TCAS II or Extended Squitter ground stations from attempting to interrogate these devices s*

2.2.23.3.1 ES/NT Format

The format used for ES/NT **shall** be a 112-bit downlink format (DF=18) using II=0 and SI=0 in generating the PI field (see §2.2.14.4.30). The format **shall** contain the flowing fields:

Field	Reference
DF downlink format	§2.2.14.4.10
CF control field	§2.2.14.4.8
AA address, announced	§2.2.14.4.1
ME message, Extended Squitter	§2.2.14.4.23
PI parity/interrogator identifier	§2.2.14.4.30

2.2.23.3.2 ES/NT Squitter Types

Airborne Position Squitter. The airborne position type ES/NT **shall** use format DF=18 with the format for register 05 {HEX} inserted in the ME field.

Surface Position Squitter. The surface position type ES/NT type **shall** use format DF=18 with the format for register 06 {HEX} inserted in the ME field.

Aircraft Identification Squitter. The aircraft identification type ES/NT **shall** use format DF=18 with the format for register 08 {HEX} inserted in the ME field.

Airborne Velocity Squitter. The airborne velocity type ES/NT **shall** use format DF=18 with the format for register 09 {HEX} inserted in the ME field

Event-Driven Squitter. The event-driven type ES/NT **shall** use format DF=18 with the format for register 0A {HEX} inserted in the ME field.

DRAFT © 2007 RTCA, Inc.

2.2.23.3.3 ES/NT Squitter Rate

At power up initialization, the non-transponder device **shall** commence operation in a mode in which it does not broadcast any squitters. The non-transponder device **shall** initiate the broadcast of ES/NT squitters for airborne position, surface position, airborne velocity and aircraft identification when data are available for inclusion in the ME field of these squitter types. This determination **shall** be made individually for each squitter type. When ES/NT squitters are broadcast, transmission rates **shall** be as indicated in §2.2.23.1.3.

Note: *This suppresses the transmission of long squitters from aircraft that are unable to report position, velocity or identity.*

2.2.23.3.4 Delayed Transmission

ES/NT squitter transmission **shall** be delayed if the non-transponder device is busy broadcasting one of the other squitter types. The delayed squitter **shall** be transmitted as soon as the non-transponder device becomes available.

2.2.23.3.5 ES/NT Antenna Selection

Non-transponder devices operating with antenna diversity (see §2.2.12) **shall** transmit ES/NT squitters as follows:

a) when in the airborne state (§2.2.23.1.5), the non-transponder device **shall** transmit each type of ES/NT squitter alternately from the two antennas; and

b) when in the surface state (§2.2.23.1.5), the non-transponder device **shall** transmit ES/NT squitters using the top antenna.

2.2.23.3.6 Register Timeout

The non-transponder device **shall** clear all 56-bits of the airborne position, surface position and velocity registers used for these messages if these registers are not updated within two seconds of the previous update. This timeout **shall** be determined separately for each of these registers.

Note: *These registers are cleared to prevent the reporting of outdated position and velocity information.*

2.2.23.3.7 Airborne/Surface State Determination

Aircraft with an automatic means of determining on-the-ground condition **shall** use this input to select whether to report the airborne or surface message types. Aircraft without such means **shall** report the airborne type messages.

DRAFT © 2007 RTCA, Inc.

2.2.23.3.8 Surface Squitter Rate Control

Once per second the algorithm for aircraft motion specified in §2.2.3.3.2.3 of DO-260A **shall** be executed. The surface squitter rate **shall** be set according to the results of this algorithm.

2.2.23.3.9 ES/NT RF Signals

ES/NT devices **shall** conform to all of the 1090 MHz RF signals in space requirements specified for a Mode S transponder. This **shall** be demonstrated by compliance to the appropriate test procedures in DO-260A.

2.2.23.4 Extended Squitter Military Application

Note: *This format supports the broadcast of Extended Squitter ADS-B messages in support of military applications. A separate format is used to distinguish these Extended Squitters from the standard ADS-B message set broadcast using DF=17 or 18.*

2.2.23.4.1 Military Format

The format used for DF=19 **shall** be a 112-bit downlink format containing the following fields:

Field	Reference
DF downlink format	§2.2.14.4.10
AF application field	§2.2.14.4.3

2.2.23.5 Extended Squitter Maximum Transmission Rate

The maximum total number of Extended Squitters (DF =17, 18 or 19) emitted by any Extended Squitter installation **shall not** exceed 6.2 per second.

2.2.24 Elementary Surveillance (ELS) Compliant Transponder

2.2.25 Enhanced Surveillance (EHS) Compliant Transponder

DRAFT © 2007 RTCA, Inc.

2.3 Equipment Performance – Environmental Conditions

The environmental tests and performance requirements described in this subsection provide a laboratory means of determining the overall performance characteristics of the equipment under conditions representative of those that may be encountered in actual aeronautical operations.

Some of the environmental tests contained in this subsection need not be performed unless the manufacturer wishes to qualify the equipment for that particular environmental condition. These tests are identified by the phrase "When Required." If the manufacturer wishes to qualify the equipment to these additional environmental conditions, then these "when required" tests **shall** be performed.

The test procedures applicable to a determination of equipment performance under environmental test conditions are contained in RTCA Document DO-160D, *Environmental Conditions and Test Procedures for Airborne Equipment*, July 1997.

Some of the performance requirements in Subsections §2.1 and §2.2 are not tested by the test procedures herein. Moreover, not all tests are required to be done at each of the environmental conditions in RTCA/DO-160D. Judgment and experience have indicated that these particular performance parameters are not susceptible to certain environmental conditions and that the level of performance specified in Subsections §2.1 and §2.2 will not be measurably degraded by exposure to these environmental conditions.

The specified performance tests cover all classes of Mode S transponders. Only those tests that are applicable to the class of transponder being qualified need be done. Additional tests may have to be performed in order to determine performance of particular design requirements that are not specified in this document. It is the responsibility of the manufacturer to determine appropriate tests for these functions.

Specific transponder performance tests have been included in this section for use in conjunction with the environmental procedures of RTCA/DO-160D. These tests have been judiciously chosen as a subset of the transponder performance tests of Subsection §2.4. Normally, a MOPS document does not provide specific equipment performance tests to be used in conjunction with the environmental procedures of RTCA/DO-160D. However, there is a sufficiently large number of transponder performance tests in Subsection §2.4 that it would be impractical to repeat all of those tests in conjunction with all of the appropriate environmental procedures.

2.3.1 Environmental Test Conditions

Table 2.3.1.1 lists all of the environmental conditions and test procedures (hereafter referred to as environmental procedures) that are documented in RTCA/DO-160D. Table 2.3.1.2 lists the 13 sets of transponder performance tests that are specified in detail in this section and which are intended to be run subject to the various environmental procedures of RTCA/DO-160D. In order to simplify the process of relating the environmental procedures to the transponder performance tests, Table 2.3.1.1 divides the environmental procedures into groups. All of the procedures in a given group are carried out in conjunction with the same set of transponder performance tests. Using this approach, the environmental procedures fall into six groups. The environmental procedures that apply to all of the sets of transponder performance tests fall into group 1. Group 2 procedures apply to 8 of the sets of transponder performance tests. Groups 3, 4, and 5 apply to 4, 3 and 3 of the sets of transponder performance tests, respectively. (Group 6, which applies

DRAFT © 2007 RTCA, Inc.

to none of the transponder performance tests, includes only environmental procedures that are intended to determine the effect of the transponder on rack mounting hardware, compass needles, explosive gasses, and other RF hardware.)

Table 2.3.1.2 indicates which of the groups of environmental procedures is related to each set of transponder performance tests. Each transponder performance test **shall** be validated under all of the environmental procedures in the groups required for that test as indicated in Table 2.3.1.2.

DRAFT © 2007 RTCA, Inc.

Table 2.3.1.1: Environmental Test Groups

	ENVIRONMENTAL CONDITION	DO-160D Paragraph	GROUPS	REMARKS
4a	Temperature	4.5	1	
4b	Altitude	4.6.1	4	
4c	Decompression & Overpressure	4.6.2-4.6.3	4	When required
5	Temperature Variation	5.0	3	
6	Humidity	6.0	2	
7a	Operational Shock	7.2	2	When required
7b	Crash Safety	7.3	6	NO XPNDR TESTS
8	Vibration	8.0	3 & 1	3 during: 1 after
9	Explosion	9.0	6	NO XPNDR TESTS
10	Waterproofness	10.0	2	When required
11	Fluids Susceptibility	11.0	2	When required
12	Sand and Dust	12.0	2	When required
13	Fungus Resistance	13.0	2	When required
14	Salt Spray	14.0	2	When required
15	Magnetic Effect	15.0	6	NO XPNDR TESTS
16	Power Input Momentary Interruptions All Others	16.0	5 3 & 2	3 during: 2 after
17	Voltage Spike	17.0	2	
18	Audio Freq. Conducted Susceptibility	18.0	1	
19	Induced Signal Susceptibility	19.0	1	
20	RF Susceptibility	20.0	1	
21	Emission of RF Energy	21.1	6	NO XPNDR TESTS
22	Lightning Induced Transient Susceptibility	22.0	none	Procedure not yet defined

Note: *Tests in Group 6 determine the effects of the transponder on other equipment (mounts, compass needles, explosive gasses, and other RF equipment) and therefore do not involve the transponder performance requirements of this document.*

DRAFT © 2007 RTCA, Inc.

Table 2.3.1.2: Performance Test Requirements During Environmental Tests

Test Procedure Paragraph	DESCRIPTION	REQUIRED ENVIRONMENT TEST GROUPS (See Table 2.3.1.1)					
		1	**2**	**3**	**4**	**5**	**6**
§2.3.2.1	Receiver Characteristics	x	x	x			
§2.3.2.2.1	Reply Transmission Frequency	x	x	x	x		
§2.3.2.2.2	RF Peak Power Output	x	x		x		
§2.3.2.2.3	Reply Rate Capability	x					
§2.3.2.3	Reply Pulse Characteristic	x					
§2.3.2.4	Side Lobe Suppression	x	x				
§2.3.2.5	Pulse Decoder Characteristic	x	x				
§2.3.2.6	Transponder Recovery & Desens.	x					
§2.3.2.7	Standard Interference Pulse	x					
§2.3.2.8	Undesired Replies	x		x		x	
§2.3.2.9	Self-Test and Monitors	x	x	x	x	x	
§2.3.2.10	Diversity Operation	x	x				
§2.3.2.11	Data Handling & Interfaces	x	x				
§2.3.2.12	Restoration of Power	x	x			x	

2.3.2 Detailed Environmental Test Procedures

The test procedures set forth below are considered satisfactory for use in determining equipment performance under environmental conditions. Although specific test procedures are cited, it is recognized that other methods may be preferred. These alternative procedures may be used if the manufacturer can show that they provide at least equivalent information. In such cases, the procedures cited herein should be used as one criterion in evaluating the acceptability of the alternative procedures. These transponder performance tests do not include specific pass fail criteria. It is intended that those criteria be obtained from the transponder performance requirements presented in the referenced paragraphs in §2.2.

DRAFT © 2007 RTCA, Inc.

2.3.2.1 Receiver Characteristics (§2.2.2)

Step 1 Sensitivity Variation with Frequency (§2.2.2.2)

Using a standard Mode A interrogation, interrogate the transponder at RF signal frequencies of 1029.8, 1030.0 and 1030.2 MHz. Determine the required maximum RF signal level at each frequency required to produce 90% reply efficiency.

Step 2 Sensitivity (§2.2.2.4.a.)

Interrogate the transponder with a standard Mode C ATCRBS/Mode S All-Call interrogation. Determine the minimum RF signal level required to produce 90% transponder reply efficiency.

Step 3 ATCRBS and ATCRBS/Mode S All-Call Dynamic Range (§2.2.2.4.f)

Interrogate the transponder with a standard Mode A interrogation at RF levels from MTL +3 dB to -21 dBm in approximately 5 equal steps. Determine reply ratio. Repeat for a standard Mode C ATCRBS/Mode S All-Call.

Step 4 ATCRBS/Mode S All-Call Low-Level Reply Ratio (§2.2.2.4.d.)

Interrogate the transponder with a standard Mode C ATCRBS/Mode S All-Call at an RF level of -81 dBm. Determine reply ratio.

Step 5 Mode S Sensitivity (§2.2.2.4.b.)

Interrogate the transponder with a Mode S Only All-Call interrogation at a standard rate with PR=0. Determine the minimum RF level to produce 90% proper reply efficiency.

Step 6 Mode S Dynamic Range (§2.2.2.4.c.)

Using the signal specified in Step 5, determine the reply efficiency for RF levels of MTL +3 dB, -50 dBm and -21 dBm.

Step 7 Mode S Low-Level Reply Ratio (§2.2.2.4.d.)

Using the signal specified in Step 5, determine reply efficiency for an RF level of -81 dBm.

2.3.2.2 Transmitter Characteristics (§2.2.3)

2.3.2.2.1 Reply Transmission Frequency (§2.2.3.1)

Interrogate the transponder with a standard Mode A interrogation. Use a 14 (7777) pulse reply group. Repeat with a standard Mode A ATCRBS/Mode S All-Call. Determine the reply frequency for both reply types.

DRAFT © 2007 RTCA, Inc.

2.3.2.2.2 RF Peak Power Output (§2.2.3.2)

Step 1 ATCRBS Power Output (§2.2.3.2)

Connect the equipment as shown in Figure 2-26. Set the transponder for a 14-pulse (7777) reply. Interrogate the transponder with a standard Mode A interrogation at 1200 interrogations per second or the maximum for which the transponder is designed and measure the single pulse having the least RF power output. Determine that the power output meets the requirements of §2.2.3.2.

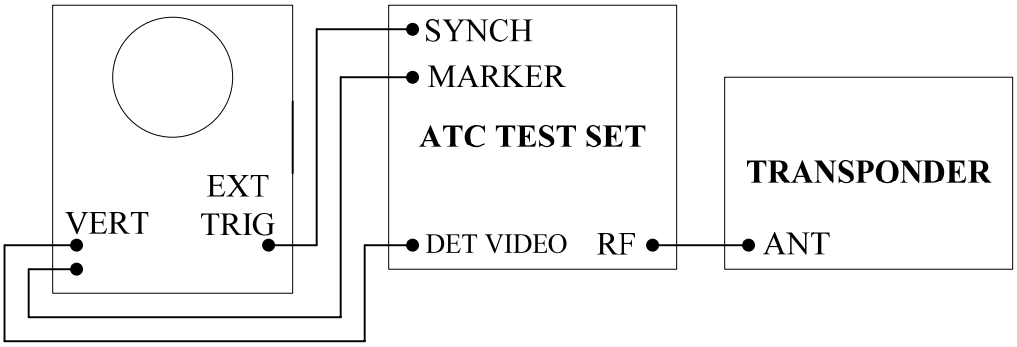

Figure 2-26:

Step 2 Mode S Power Output (§2.2.3.2)

Repeat Step 1 with a standard Mode A ATCRBS/Mode S All-Call interrogation at the standard rate.

2.3.2.2.3 Reply Rate Capability

Step 1 ATCRBS Reply Rate Capability (§2.2.3.4.1.a and §2.2.3.4.2)

Set the transponder for a 15-pulse ATCRBS reply. Interrogate the transponder at a constant rate of 500 ATCRBS interrogations per second plus 50 Mode S interrogations (with short replies) per second. Measure the output power and frequency. If the transponder is equipped for long Mode S reply formats, repeat the test with 16 (24 if also equipped with the enhanced data link protocols) of the 50 Mode S interrogations requiring long replies.

Step 2 Continuous Reply Rate Capability (§2.2.3.4.1.a and §2.2.3.4.2)

Set the transponder for a 14 pulse plus SPI-pulse ATCRBS reply. Interrogate the transponder at a constant rate of 500 ATCRBS interrogations per second plus 50 Mode S interrogations (with short replies) per second. If the transponder is equipped for long Mode S reply formats, have 16 (24 if also equipped with the enhanced data link protocols) of the 50 Mode S interrogations requiring long replies. Determine reply ratio for each type of interrogation.

DRAFT © 2007 RTCA, Inc.

Step 3 100 Milliseconds Peak Reply Rate Capability (§2.2.3.4.1 b & c and §2.2.3.4.2)

Set the transponder for a 14 pulse plus SPI-pulse ATCRBS reply. Interrogate the transponder with periodic bursts of ATCRBS and Mode S interrogations as follows: 120 ATCRBS interrogations (100 if the equipment is intended for installation in aircraft that operate at altitudes not exceeding 15,000 feet) plus 18 Mode S interrogations (with short replies), each type of interrogation approximately uniformly spaced within a single 0.1-second interval, followed by a 0.9-second interval with no interrogations. If the transponder is equipped for long Mode S reply formats, have 6 (9 if also equipped with the enhanced data link protocols) of the 18 Mode S interrogations requiring long replies. Determine reply ratio for each type of interrogation.

Step 4 25 Millisecond Peak Reply Rate Capability (§2.2.3.4.2)

Set the transponder for a 14 pulse plus SPI-pulse ATCRBS reply. Interrogate the transponder with periodic bursts of ATCRBS and Mode S interrogations as follows: 30 ATCRBS interrogations (25 if the equipment is intended for installation in aircraft that operate at altitudes not exceeding 15,000 feet) plus 8 Mode S interrogations (requiring short replies), each type of interrogation burst approximately uniformly spaced within a single 25-millisecond interval, followed by a 975-millisecond interval without interrogations. If the transponder is equipped for long Mode S reply formats, have 4 (6 if also equipped with the enhanced data link protocols) of the 8 Mode S interrogations requiring long replies. Determine reply ratio for each type of interrogation.

Step 5 1.6 Milliseconds Peak Reply Rate Capability (§2.2.3.4.1 and §2.2.3.4.2)

Repeat Step 3 with the following modification: Use two ATCRBS interrogations plus four Mode S interrogations (with short replies), each type of interrogation approximately uniformly spaced within a single 1.6-millisecond interval, followed by a 998.4-millisecond interval with no interrogation. If the transponder is so equipped, two of the Mode S interrogations require long replies instead of all short replies. Determine reply ratio for each type of interrogation.

2.3.2.3 Reply Pulse Characteristics (§2.2.4)

2.3.2.3.1 ATCRBS Reply Pulse Characteristics (§2.2.4.1)

Step 1 ATCRBS Reply Pulse Spacing and Width (§2.2.4.1)

Interrogate with a standard Mode A interrogation. Use a 14-pulse reply group (7777) and measure the time between the first and last framing pulses. This time **shall** be 20.30 ±0.10 microseconds. Measure the width of the first and last pulses. This width **shall** be 0.45 ±0.10 microseconds. Observe that all code pulses are of equal width and stable in position with respect to the first pulse.

Step 2 Reply Delay and Jitter (§2.2.4.1.6.a and §2.2.4.1.6.b)

Connect the equipment as shown in Figure 2-26. Interrogate the transponder with a standard Mode A interrogation. Measure the average delay between the leading edge of P_3 and the leading edge of the first reply pulse at the 50%

amplitude points and the extreme positions of the leading edge of the first reply pulse at signal levels of MTL +3 dB, -50 dBm and -21 dBm.

2.3.2.3.2 Mode S Replies (§2.2.4.2)

Step 1 Mode S Reply Delay and Jitter (§2.2.4.2.5.a)

Interrogate the transponder with a standard Mode S interrogation using any format for which a reply is required. Measure the extreme positions of the leading edge of the first reply pulse, at signal levels of MTL +3 dB, -50 dBm and -21 dBm, and the delay between the P_6 sync phase reversal transient and the leading edge of the first reply pulse.

Step 2 ATCRBS/Mode S All-Call Reply Delay and Jitter (§2.2.4.2.5.b)

Interrogate the transponder with a standard ATCRBS/Mode S All-Call interrogation. Measure the extreme positions of the leading edge of the first reply pulse at signal levels of MTL +3 dB, -50 dBm and -21 dBm, and the delay between the leading edge of P_4 and the leading edge of the first reply pulse.

2.3.2.4 Side Lobe Suppression (§2.2.5)

Step 1 SLS Decoding [§2.2.5.1.a (1) and (3)]

Connect the equipment as shown in Figure 2-27. Interrogate the transponder with a standard Mode A interrogation plus P_2 RF signal level to be at MTL +3 dB; P_2 level = P_1 level. Verify that the reply ratio is less than one percent.

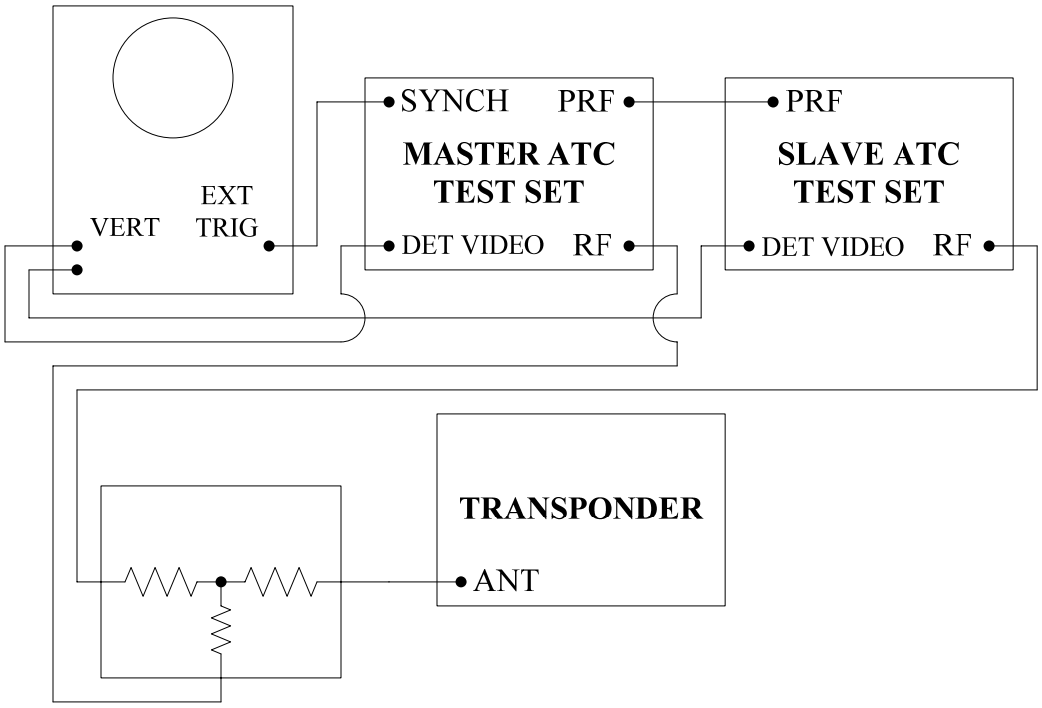

Figure 2-27:

DRAFT © 2007 RTCA, Inc.

Step 2 SLS Dynamic Range [§2.2.5.1.a (2) and §2.2.5.1.c]

Repeat Step 1 at RF signal levels: -60 dBm, -40 dBm and -21 dBm.

Step 3 SLS Pulse Ratio (§2.2.5.1.b)

Repeat Step 1 at RF signal levels MTL +3 dB, -40 dBm and -21 dBm. Set P_2 level 9 dB below P_1 level.

Step 4 Suppression Duration [§2.2.5.1.d (1)]

Interrogate the transponder with a P_1- P_2 ATCRBS suppression pulse pair (2 microsecond spacing), followed after 50 microseconds with a P_1- P_3 (Mode A, 8 microseconds) pulse pair. Reduce the spacing of the P_1- P_3 pair until the transponder ceases to reply. The time interval between the leading edges of P_2 and P_1 (of the P_1- P_3 pair) is the suppression duration.

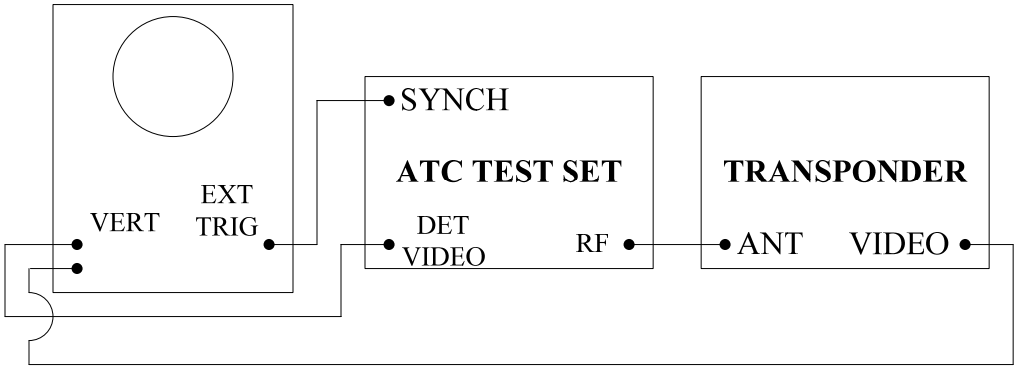

Figure 2-28: not referenced anywhere

2.3.2.5 Pulse Decoder Characteristics (§2.2.6)

Step 1 Pulse Level Tolerances, ATCRBS/Mode S All-Call (§2.2.6.1.1)

Connect the equipment as shown in Figure 2-26. Interrogate at the standard rate and at an input level 10 dB above MTL. Use an ATCRBS Mode A interrogation followed by a 1.6-microsecond P_4 pulse in its nominal position. Vary the level of the P_4 pulse between -10 and 0 dB in 1 dB steps with respect to P_3. Verify the changeover from ATCRBS to Mode S replies at the relative P_4 levels specified in §2.2.6.1.1.a and §2.2.6.1.1.b.

Step 2 Pulse Level Tolerances, ATCRBS-Only All-Call (§2.2.6.1.2)

Use setup and signal levels as in Step 1 above but employ a 0.8 microsecond P_4. Vary the level of the P_4 pulse between -10 and 0 dB in 1 dB steps with respect to P_3. Verify the changeover from ATCRBS replies to no replies at the relative P_4 levels specified in §2.2.6.1.2.a and §2.2.6.1.2.b.

DRAFT © 2007 RTCA, Inc.

Step 3 Pulse Position Tolerances, $P_1/_3$, ATCRBS-Type Interrogations (§2.2.6.2 a and b)

Use setup and signal levels as in Step 1 above. Interrogate with:

a. ATCRBS Mode A

b. ATCRBS Mode C/Mode S All-Call

For each interrogation type vary the P_1- P_3 spacing within the required acceptance range (§2.2.6.2.a) and verify that the reply ratio is at least 90%.

Step 4 Pulse Position Tolerances, P_4, ATCRBS/Mode S All-Calls (§2.2.6.2 a and c)

Use setup and signal levels as in Step 1 and interrogate with an ATCRBS Mode A/Mode S All-Call. Vary the P_3- P_4 spacing within the required acceptance range. Determine conformance to requirements as in Step 3.

Step 5 Short Pulse Rejection, ATCRBS-Type Interrogations (§2.2.6.3.c)

Use setup as in Step 1 and set signal input level to MTL for each of the following interrogation types:

a. ATCRBS Mode A

b. ATCRBS Mode C/Mode S All-Call

For each interrogation type set P_1 duration to 0.25 microsecond and verify that less than 10% replies are generated. Repeat test for a P_3 duration of 0.25 microsecond. Repeat tests at -60 dBm and -45 dBm input level.

Step 6 Sync Phase Reversal Position Tolerance (from P_2) (§2.2.6.4)

Generate a standard Mode S-Only All-Call interrogation at MTL +3 dB. Vary the spacing between the P_6 sync phase reversal and either P_2 or P_6 as applicable by 200 nanoseconds from the nominal spacing. Measure the range over which Mode S replies are received. Repeat for P_1 levels of -50 dBm and -21 dBm.

2.3.2.6 Transponder Recovery and Desensitization (§2.2.7)

Step 1 ATCRBS Single Pulse Desensitization and Recovery (§2.2.7.1.1 and §2.2.7.2)

Connect the equipment as shown in Figure 2-27. Set the master test set to generate a single pulse not less than 0.7 microsecond wide at the standard ATCRBS interrogation rate and a power level equal to 50 dB above MTL. Set the slave test set to generate an ATCRBS Mode A interrogation delayed 3 microseconds from the trailing edge of the single pulse. Determine the amplitude of the slave test set signal required to produce 90% reply efficiency. Repeat for master to slave test set delay of 15 microseconds.

DRAFT © 2007 RTCA, Inc.

Step 2 Recovery from a Mode S Interrogation Requiring No Reply (§2.2.7.2.1)

With the equipment connected as shown in Figure 2-27, set the master test set to generate a short Mode S surveillance interrogation with broadcast address. Set the slave test set to generate an ATCRBS Mode A interrogation at a power level equal to 3 dB above MTL. Measure the delay time between the master and the slave test sets necessary to elicit a reply efficiency of 90%.

Step 3 Recovery from a Mode S Comm-C Interrogation (§2.2.7.2.1)

With equipment connected as shown in Figure 2-27, set the master test set to generate the initial segment of a properly addressed Comm-C interrogation at a signal level of -21 dBm. Set the slave test set to generate an ATCRBS Mode A inter-rogation delayed 45 microseconds from the sync phase reversal of the master interrogation. Determine the amplitude of the slave test signal required to produce 90% reply efficiency.

Step 4 Recovery from a Suppression Pair (§2.2.7.2.2)

With equipment connected as shown in Figure 2-27, set the master test set to generate a P_1- P_2 pulse pair at the ATCRBS standard interrogation rate and a power level equal to -35 dBm. Set the slave test set to generate a Mode S-Only All-Call interrogation delayed 10 microseconds from the trailing edge of the P_2 pulse of the master test set interrogation. Determine the amplitude of the slave test set signal required to produce 90% reply efficiency.

2.3.2.7 Standard Interference Pulse (§2.2.8.2) and Mode S SLS (§2.2.5.2)

Connect the equipment as shown in Figure 2-27. Interrogate the transponder with an interfering pulse (duration: 0.8 microsecond, level 6 dB below P_6) inserted at a position 1.8 microseconds after the leading edge of P_6 of a standard Mode S-Only All-Call. The Mode S-Only All-Call **shall** be at a power level of -50 dBm. Observe the reply ratio while slowly moving the interfering pulse from its initial position to the end of P_6. Repeat the test for signal levels of -21, and -68 dBm.

Repeat the test with an interference pulse level 3 dB below the P_6 level.

Insert the interfering pulse (now acting as P_5) 0.85 microsecond after the leading edge of P_6 and use a level 3 dB above the level of P_6. Use signal levels of MTL +3 dB and -21 dBm. Reply ratio in all cases should be 10% or less (§2.2.5.2.a).

Reduce the level of P_5 to a value 12 dB below the level of P_6 and repeat the test at signal levels of MTL +3 dB and -21 dBm. Reply ratio should be 99% or more (§2.2.5.2.b).

2.3.2.8 Undesired Replies (§2.2.9)

With no interrogations count the number of replies for a minimum of one minute.

DRAFT © 2007 RTCA, Inc.

2.3.2.9 Self-Test and Monitors (§2.2.10)

Step 1 Self-Test Interrogation/Reply Rate (§2.2.10.1 a and c)

Activate the self-test function (if provided) of the transponder under test and determine the reply rate to the self-test interrogation.

Step 2 Squitter Monitor (§2.2.10.2)

A specific test procedure for this function is not described. This test requires that the manufacturer artificially disable the squitter generation function. The detailed procedure for proving this capability must be left to the discretion of the manufacturer.

2.3.2.10 Diversity Operation (§2.2.12)

Two means of generating identical ATCRBS and Mode S interrogations which can be delayed from each other from 125 to 375 nanoseconds must be provided. These two generators must also have independent control of power level.

Means of determining the antenna terminal that generates the reply.

Means of determining the reply power level on both antennas simultaneously.

Means of determining reply delay for each channel and between channels.

Measurement Procedure:

Note: *Because the specifications for diversity operations are symmetrical in all respects, channels are arbitrarily designated A and B.*

Step 1 Single Channel Test (§2.2.12.3 and §2.2.12.4)

When measuring channel A and B parameters take care that any cables used for measurements are of equal length and equal loss. Interrogate channel A only, while monitoring channel A and B. At signal level MTL +6 dB use the following types of interrogations and record the listed observations:

ATCRBS Mode A

ATCRBS Mode C/Mode S All-Call

Mode S formats UF=0, and if so equipped 20

For signal levels of -50 dBm and -21 dBm use an ATCRBS Mode A and a Mode S format of UF=0 types of interrogations and record the listed observations.

Observe: Correct reply channel.

Reply delay for each interrogation signal type and for the signal levels as specified.

Correct power ratio per §2.2.12.3.

DRAFT © 2007 RTCA, Inc.

Repeat the above test reversing channels.

Compare records of reply delays for conformance with §2.2.12.4.

Step 2 Selection Test (§2.2.12.1.b)

Synchronize the interrogations to channels A and B so that they are 0.125 +0.00/-0.040 microseconds apart where channel A is first.

Use an ATCRBS Mode C and a Mode S UF=4 to interrogate at a power level on channel A of MTL and a power level on channel B of MTL +6 dB.

Observe that the correct reply channel is channel B.

Use an ATCRBS Mode C and a Mode S UF=4 to interrogate at a power level on channel A of MTL +6 dB and a power level on channel B of MTL.

Observe that the correct reply channel is channel A.

Synchronize the interrogations to channels A and B so that they are 0.125 +0.00/-0.040 microseconds apart where channel B is first.

Use an ATCRBS Mode C and a Mode S UF=4 to interrogate at a power level on channel A of MTL and a power level on channel B of MTL +6 dB.

Observe that the correct reply channel is channel B.

Use an ATCRBS Mode C and a Mode S UF=4 to interrogate at a power level on channel A of MTL +6 dB and a power level on channel B of MTL.

Observe that the correct reply channel is channel A.

Step 3 Delay-Selection Test (§2.2.12.2)

Synchronize the interrogations to channels A and B so that they are 0.375 +0.040/-0.00 microseconds apart where channel A is first.

Use an ATCRBS Mode C and a Mode S UF=4 to interrogate at a power level on channel A of MTL +6 and a power level on channel B of -50 dBm.

Observe that the correct reply channel is channel A.

Synchronize the interrogations to channels A and B so that they are 0.375 +0.040/-0.00 microseconds apart where channel B is first.

Use an ATCRBS Mode C and a Mode S UF=4 to interrogate at a power level on channel A of -50 dBm and a power level on channel B of MTL +6.

Observe that the correct reply channel is channel B.

DRAFT © 2007 RTCA, Inc.

2.3.2.11 Data Handling and Interfaces (§2.2.13)

2.3.2.11.1 Fixed Direct Data (§2.2.13.1.1)

With the transponder RF port connected to the RF port of the Mode S transponder test set, perform the following test sequences.

Step 1 Mode S All-Call Addresses [§2.2.13.1.1.a (1)]

Interrogate the transponder with a Mode-S Only All-Call interrogation with PR, IC and CL fields set to ZERO. Verify that the AA field of the transponder reply reflects the address which has been set into the transponder. Use two different addresses consisting of AAAAAAH and 555555H.

Step 2 Mode S Discrete Address [§2.2.13.1.1.a (2)]

Interrogate the transponder with a standard Mode S surveillance-altitude interrogation (UF=4) with the PC, RR, DI and SD fields set to 0 and an address consisting of ONE followed by 23 ZEROs. Verify that the transponder replies with appropriate bits set in the AP field when a like address is set into the transponder, and will not respond when each of the other combinations of 23 ZEROs and a single ONE are entered as addresses.

Step 3 Maximum Airspeed [§2.2.13.1.1.b (2)]

Interrogate the transponder with a short special surveillance interrogation (UF=0) with the AQ field set to 1. Verify that the RI field of the transponder reply corresponds to the airspeed code set into the transponder as each of the seven possible airspeed codes is used.

Step 4 Aircraft Identification Data (§2.2.13.1.1.c)

If the transponder inputs aircraft identification data as fixed data, the following test applies. Interrogate the transponder with a short surveillance-altitude (UF=4) with PC, DI and SD fields set to 0 and the RR field set to 18. Set the aircraft identification input to the transponder to ’LLLLLLLL’ and verify that the encoded aircraft identification data is correctly transmitted in the MB field (MB Bits 9-56 = 001100001100 ...) of the transponder’s reply. Repeat with an aircraft identification input of ‘33333333’ and verify that the encoded aircraft identification data is correctly transmitted in the MB field (MB Bits 9-56 =110011110011 ...) of the transponder’s reply.

2.3.2.11.2 Variable Direct Data (§2.2.13.1.2)

Step 1 Pressure Altitude (ATCRBS) [§2.2.13.1.2.a (1)]

Connect the equipment as shown in Figure 2-26. Interrogate the transponder with a standard ATCRBS Mode C interrogation. With the ALT switch on, set altitude code inputs to the transponder, which should result in setting each of the altitude bits in the reply one at a time. Verify proper positioning of these bits in the reply. Verify that only the framing pulses are present in the reply when the ALT switch is set to "off."

DRAFT © 2007 RTCA, Inc.

Step 2 4096 Identification Code (ATCRBS) (§2.2.13.1.2.b)

With equipment connected as in Step 1, interrogate the transponder with a standard ATCRBS Mode A interrogation. Set identification codes which should result in the setting of each of the identification reply bits one at a time. Verify proper positioning of these bits, and that the correct bits are present in the reply.

Step 3 Pressure Altitude (Mode S) [§2.2.13.1.2.a (2)]

Connect the transponder RF port to the Mode S test set. Interrogate the transponder with a standard surveillance altitude interrogation (UF=4) with the PC, RR, DI and SD fields set to ZERO and the address the same as that provided to the transponder. With the ALT switch on, provide altitude code inputs to the transponder which should result in setting each of the AC field bits (including the M bit or the Q bit if the transponder is equipped to report altitude in 25-foot increments) of the reply one at a time. Verify that the correct bits are transmitted in the AC field of the reply. Verify that the AC field is all ZEROs when the ALT switch is set to "off."

Step 4 Identification Code (Mode S) (§2.2.13.1.2.b)

With the equipment connected as in Step 3, interrogate the transponder with a standard surveillance-identity interrogation (UF=5) with PC, RR, DI and SD fields set to ZERO and the address the same as that provided to the transponder. Using the identity codes specified in Step 2, verify that the proper bit patterns exist in the ID field of the reply.

Step 5 Flight Status and Vertical Status (§2.2.13.1.2 c and d)

Interrogate with UF=0 and UF=16 and verify that the VS field is a ONE when the "on-the-ground port" of the transponder is set to the on-the-ground condition. Also, verify that the VS field is a ZERO otherwise.

Interrogate with formats UF=4, 5, 20, 21 and verify that the transponder follows the protocol of §2.2.18.2.7 and Figure 2-13.

Step 6 Aircraft Identification Data (§2.2.13.1.2.e)

If the transponder inputs aircraft identification data as variable data, the following test applies. Interrogate the transponder with a short surveillance-altitude (UF=4) with PC, DI and SD fields set to 0 and the RR field set to 18. Set the aircraft identification input to the transponder to ‘LLLLLLLL’ and verify that the encoded aircraft identification data is correctly transmitted in the MB field (MB Bits 9-56 = 001100001100 ...) of the transponder’s reply. Repeat with an aircraft identification input of ‘33333333’ and verify that the encoded aircraft identification data is correctly transmitted in the MB field (MB Bits 9-56 = 110011110011 ...) of the transponder’s reply.

DRAFT © 2007 RTCA, Inc.

2.3.2.11.3 Standard Transaction Interfaces (§2.2.13.3)

Step 1 Uplink Interface Information Content (§2.2.13.3.1.a)

Interrogate the transponder with valid Mode S interrogations of all uplink formats that the transponder is designed to accept. Verify that all fields (possibly excluding AP) of the interrogations are passed correctly through the transponder and except for UF=0, 11, 16, and 24 (when it is a request for a downlink ELM) appear at the uplink interface.

Step 2 Uplink Interface, "No-Storage Design" (§2.2.13.3.1.b)

Interrogate the transponder with valid Mode S interrogations of all uplink formats that the transponder is designed to accept. Verify that all data appear correctly at the uplink interface prior to the start of the transponder reply.

Step 3 Uplink Interface, "Storage Design" Acceptance Rate (§2.2.13.3.1.c)

Interrogate the transponder with valid Mode S interrogations (both short and long) at the rates and time periods specified in §2.2.3.4.2. Verify that all data appear correctly at the uplink interface.

Step 4 Downlink Interface, Information Content (§2.2.13.3.2.a)

Insert an all ONEs input. Interrogate the transponder with all uplink formats that it is designed to accept (one interrogation of each format, RR=16 for long interrogations). Verify that all bits in the transponder replies, not set by transponder protocol requirements, are ONE. Verify that all fields in the replies, set by transponder protocol, have the correct value.

Step 5 Downlink Interface, "No-Storage Design" (§2.2.13.3.2.b)

Insert an all ONEs input. Interrogate the transponder with a standard Comm-A, altitude interrogation. Verify that data are inserted into the transponder at the proper time, and that the transponder reply contains the proper data.

Step 6 Downlink Interface, "Storage Design" Buffer Rate, Buffer Function (§2.2.13.3.2.c)

Set up a sequence of Comm-B replies with the value of the last 48 bits of MB of each reply set to the number of the reply in the sequence (e.g., MB=1 for the first reply). Interrogate the transponder with a standard Comm-A, altitude interrogation at the rates specified for long interrogations in §2.2.3.4. Verify that the replies include the proper data in the MB field. Repeat with RR equal to all valid codes from 16 through 18.

2.3.2.11.4 ELM Service Interfaces (§2.2.13.4)

Connect the transponder RF port to the RF port of the Mode S transponder test set. Connect the Mode S transponder test set of the ELM data link device to the ELM interface port of the transponder and perform the following sequences.

DRAFT © 2007 RTCA, Inc.

Step 1 ELM Uplink Interface, Data Rate (§2.2.20.1.4)

Interrogate the transponder with four 16-segment uplink ELMs (each segment having unique coding, interrogations spaced 50 microseconds apart, and a new 16 segment ELM starting every 5 milliseconds). After 4 seconds for transponders equipped for standard ELM operation and after 1 second for transponders equipped for enhanced uplink ELM operation, interrogate the transponder with another set of four 16-segment ELMs. Verify that correct data appear at the ELM interface for both interrogation bursts.

Step 2 ELM Downlink Interface, Data Rate (§2.2.20.2.4 and §2.2.3.5)

Set up a downlink ELM which conforms to the maximum capability of the transponder (each segment with unique coding) on the Mode S transponder test set or ELM data link device. Interrogate the transponder with a Comm-C (UF=24) with RC=3 and SRS="all ONEs". Verify that all segments are properly transmitted 136 ±1 microseconds apart.

2.3.2.11.5 Interface Integrity Tests (§2.2.13.2.2)

Specific test procedures for these functions are not described. Detailed procedures for demonstrating compliance with §2.2.13.2.2 are left to the discretion of the manufacturer.

2.3.2.12 Restoration of Power (§2.2.16)

Apply the momentary power interruption sequence appropriate for the transponder environmental category as specified in DO-160B, Section 16. Two seconds after the restoration of power following each power interruption, interrogate the transponder with a Mode S-Only All-Call interrogation with PR, IC and CL fields set to ZERO. Verify that a correct All-Call reply (DF=11) is transmitted in response to this interrogation.

2.4 Equipment Test Procedures

2.4.1 Definitions of Terms and Conditions of Test

The following definitions of terms and conditions of tests are applicable to the equipment tests specified herein:

a. Power Input Voltage – Unless otherwise specified, all tests **shall** be conducted with the power input voltage adjusted to design voltage ±2 percent. The input voltage **shall** be measured at the input terminals of the equipment under test.

b. Power Input Frequency

(l) In the case of equipment designed for operation from an ac source of essentially constant frequency (e.g., 400 Hz), the input frequency **shall** be adjusted to design frequency ±2 percent.

(2) If the equipment is designed for operation from an ac source of variable frequency (e.g., 300 to 1000 Hz), tests **shall** be conducted with the input frequency adjusted to within five percent of a selected frequency and,

unless otherwise specified, within the range for which the equipment is designed.

c. Accuracy of Test Equipment – Throughout this section, the accuracy of the test equipment is not addressed in detail, but rather is left to the calibration process prescribed by the agency which certifies the testing facility.

d. Adjustment of Equipment – The circuits of the equipment under test **shall** be properly aligned and otherwise adjusted in accordance with the manufacturer's recommended practices prior to application of the specified tests. Unless otherwise specified, adjustments may not be made once the test procedures have started.

e. Test Instrument Precautions – During the tests, precautions **shall** be taken to prevent the introduction of errors resulting from the connection of voltmeters, oscilloscopes and other test instruments, across the input and output terminals of the equipment under test.

f. Ambient Conditions – Unless otherwise specified, all tests **shall** be conducted under conditions of ambient room temperature, pressure and humidity. However, the room temperature **shall** not be lower than 10 degrees C.

g. Connected Loads – Unless otherwise specified, all tests **shall** be performed with the equipment connected to loads having the impedance values for which it is designed.

h. Standard Interrogation Test Signals

The signal measurement convention **shall** be as specified in §2.1.11.

(l) General Characteristics

(a) Radio Frequency: The carrier frequency of the signal generator for ATCRBS and ATCRBS/Mode S All-Call interrogation **shall** be 1030 ±0.1 MHz. Mode S interrogation signals **shall** have a carrier frequency of 1030 ±0.01 MHz.

(b) CW Output: The CW output between pulses **shall** be at least 50 dB below the peak level of the pulse.

(c) Pulse Rise and Fall Time: Rise and fall times **shall** be as specified in §2.1.11.3.1 and §2.1.11.4.1.

Note: *Unless otherwise indicated, interval measurements are measured between half voltage points of the respective pulses as detected by a linear detector.*

(d) Pulse Top Ripple: The instantaneous amplitude of the pulses **shall** not fall more than l dB below the maximum value between the 90 percent voltage amplitude point on the leading and trailing edge of the pulse.

(e) Signal Level: Unless otherwise noted in the measurement procedure, the signal level **shall** be -60 ±3 dBm.

DRAFT © 2007 RTCA, Inc.

(f) Interrogation Repetition Standard Rate: Unless otherwise noted in the measurement procedure, interrogation rates **shall** be 450 ±25 Hz for ATCRBS interrogations and 45 ±5 Hz for All-Call and Mode S interrogation.

(g) Mode S Interrogation Address: Unless otherwise noted in the measurement procedure, the transponder address encoded in a Mode S interrogation **shall** be: Hexadecimal-AA AAAA, (i.e., binary 1010 1010 1010 1010 1010 1010).

(2) ATCRBS, ATCRBS/Mode S All-Call and ATCRBS-Only All Call Interrogations

The nominal characteristics **shall** be as specified in §2.1.11.3.

(3) Mode S Interrogations

The nominal characteristics **shall** be as specified in §2.1.11.4.

(a) Standard Mode S-Only All-Call Interrogation: Standard Mode S -Only All-Call interrogation is defined as a Mode S interrogation with UF=11, PR=8, IC and CL=0. An address of 24 ONEs is used in generation of the AP field.

(b) Standard Mode S Surveillance – Altitude Interrogation: Standard Mode S Surveillance Altitude Interrogation is defined as a Mode S interrogation of uplink format 4 (UF=4, Figure 2-4) with the following mission field values:

PC=0
RR=0
DI=0
SD=0

(c) Standard Mode S Surveillance – Identity Interrogation: Standard Mode S Surveillance – Identity Interrogation is defined as a Mode S interrogation of uplink format 5 (UF=5, Figure 2-4) with the following mission field values:

PC=0
RR=0
DI=0
SD=0

(d) Standard Comm-A – Altitude Interrogation: Standard Comm-A – Altitude Interrogation is defined as a Mode S interrogation of uplink format 20 (UF=20) with the following mission field values:

PC=0
RR=20
DI=0
SD= all ONEs
MA=hexadecimal - AA AAAA AAAA AAAA

DRAFT © 2007 RTCA, Inc.

i. Mode S Transponder Test Set

The Mode S transponder test set referenced in the detailed test procedures section is assumed to have the following minimum capabilities:

(1) Means of varying RF frequency by at least 60 MHz from center frequency.

(2) Means of varying the amplitude of the interrogating signal level from at least -21 to -85 dBm.

(3) Means of varying the amplitude of either P_2, P_3 or P_4 with respect to P_1.

(4) Means of measuring the number of correct replies transmitted in response to valid interrogations.

(5) Means of varying interval spacings between the following pairs of pulses: P_1- P_2, P_1- P_3 and P_3- P_4.

(6) Means of independently varying the durations of P_1, P_2, P_3 and P_4.

(7) Means of selecting ATCRBS Mode A or Mode C, ATCRBS/Mode S All-Call, ATCRBS-Only All-Call or Mode S interrogation formats.

(8) Means of providing carrier phase modulation of the P_6 pulse.

(9) Means of selecting the data which will modulate the P_6 pulse.

(10) Means to display the downlink reply bit pattern generated by the unit under test in response to a Mode S or All-Call interrogation.

(11) Means of adding a single 0.8 microsecond wide pulse or 0.8 microsecond pulse pairs spaced 2.0 microseconds apart, with level adjustable from 12 dB below P_1 to equal with P_1 at a carrier frequency of 1030.0, +0.2 MHz, incoherent with the Mode S signal frequency, with the following characteristics:

(a) Repetition frequencies variable up to 10,000 Hz.

(b) Positionable anywhere from the first pulse coincident with P_1 to the second pulse coincident with the end of P_6.

(12) Means to synchronize interrogation repetitions with a like test set.

(13) Means to rapidly change between two interrogation rates.

(14) Means to move the sync phase reversal position in P_6 over a +200 nanosecond range from assigned position.

(15) Means of encoding Mode S interrogations with proper parity check sequence.

DRAFT © 2007 RTCA, Inc.

(16) Means of decoding Mode S replies using proper parity check sequence.

(17) Means for interlacing ATCRBS and Mode S interrogations.

(18) Means of generating ATCRBS and Mode S burst rates in accordance with §2.2.3.4.

(19) Means of adding single 6.4 ±0.5-microsecond pulses or 3.5 ±0.5-microsecond pulse pairs spaced either 12 ±0.5 or 30 ±0.5 microseconds apart. The level **shall** be set at -30 dBm at a carrier frequency variable from 962 to 1213 MHz. The repetition rate on the pulse pairs **shall** be variable up to 3600 Hz and on the single pulses up to 2000 Hz.

2.4.2 Detailed Test Procedures

The test procedures set forth below are considered satisfactory for use in determining required performance under standard and stressed conditions. Although specific test procedures are cited, it is recognized that other methods may be preferred by the testing facility. These alternate procedures may be used if the manufacturer can show that they provide at least equivalent information. In such cases, the procedures cited herein should be used as one criterion in evaluating the acceptability of the alternate procedures.

For more detailed procedures regarding digital data, see §2.5.

2.4.2.1 Receiver Characteristics (§2.2.2)

Equipment Required:

ATC Test Set with P_4 Capability (TIC T-50-3A/4B, or equivalent)

Measurement Procedure:

With the equipment connected as shown in Figure 2-24, interrogate the transponder with a standard Mode A interrogation and follow Steps l through 4 below.

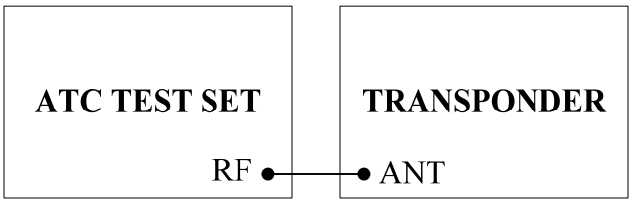

Figure 2-24:

Note: *The power can be measured either at the antenna or at the LRU (if corrections for cable loss are included).*

Step 1 Sensitivity Variation with Frequency (§2.2.2.2)

Vary the RF signal frequency over the range 1029.8 to 1030.2 MHz. Use a frequency increment that includes 1030.0 MHz. Determine the variation in RF signal level that is required to produce 90 percent transponder reply efficiency. Also determine the required maximum RF signal level.

DRAFT © 2007 RTCA, Inc.

Step 2 Sensitivity (§2.2.2.4 a and e)

Connect the equipment as shown in Figure 2-24. Interrogate the transponder with a standard Mode A interrogation. Determine the minimum RF signal level required to produce 90 percent transponder reply efficiency. Repeat the procedure using a standard Mode A ATCRBS/Mode S All-Call interrogation and a standard Mode C ATCRBS/Mode S All-Call interrogation. Determine MTL for all cases. This is the ATCRBS MTL.

Step 3 ATCRBS and ATCRBS/Mode S All-Call Dynamic Range (§2.2.2.4.f)

Repeat Step 2 for RF levels in 5 dB intervals between MTL +3 dB and -21 dBm. Determine reply ratio.

Step 4 Bandwidth (§2.2.2.3)

Adjust the RF signal level to 60 dB above MTL. Determine the frequencies above and below 1030 MHz at which 90 percent transponder reply efficiency is obtained.

Note: *Care must be taken to avoid high signal levels at or near center frequency.*

Step 5 ATCRBS and ATCRBS/Mode S All-Call Low-Level Reply Ratio (§2.2.2.4.d)

Repeat Step 2 for an RF level of -81 dBm. Determine reply ratio.

Note: *The following steps require the use of test equipment having the capabilities set forth in §2.4.1.i.*

Step 6 Mode S Sensitivity (§2.2.2.4.b)

Interrogate the transponder with a Mode-S Only All-Call interrogation at a standard rate with PRO. Determine the minimum RF level to produce 90 percent proper reply efficiency.

Step 7 Mode S Dynamic Range (§2.2.2.4.c)

Using the signal specified in Step 6, determine the reply efficiency for RF levels between MTL +3 dB and -21 dBm; use 5 dB steps.

Step 8 Mode S Low-Level Reply Ratio (§2.2.2.4.d)

Using the signal specified in Step 6, determine reply efficiency for an RF level of -81 dBm.

DRAFT © 2007 RTCA, Inc.

2.4.2.2 Transmitter Characteristics (§2.2.3)

2.4.2.2.1 Reply Transmission Frequency (§2.2.3.1)

Equipment Required:

ATC Test Set with P_4 capability (TIC T-50-3A/4B, or equivalent).
Stub Tuner (Microlab/FXR Sl-05N, or equivalent).
Variable Air Line (Line Stretcher) (Microlab/FkR SR-05N, or equivalent).
Slotted Line (HP 805C, or equivalent).

Measurement Procedure:

Connect the equipment as shown in Figure 2-25. Adjust the stub to establish a l.5:l VSWR at the antenna end of the coax line specified by the manufacturer. If the transponder requires a minimum length of a specified cable type, an attenuator equal to the loss of the minimum amount of cable may be placed between the 1.5:1 VSWR point and the transponder antenna jack. Alternately, a length of cable equal to the specified minimum length and cable type may be used in lieu of the attenuator. Interrogate the transponder with a standard Mode A interrogation and adjust the line stretcher to determine the maximum and minimum transmitter frequency. Use a 14 (7777) pulse reply group. Repeat the above procedure with a standard Mode A ATCRBS/Mode S All-Call at standard rate only. Determine that the frequency shift does not exceed the requirements of §2.2.3.1.

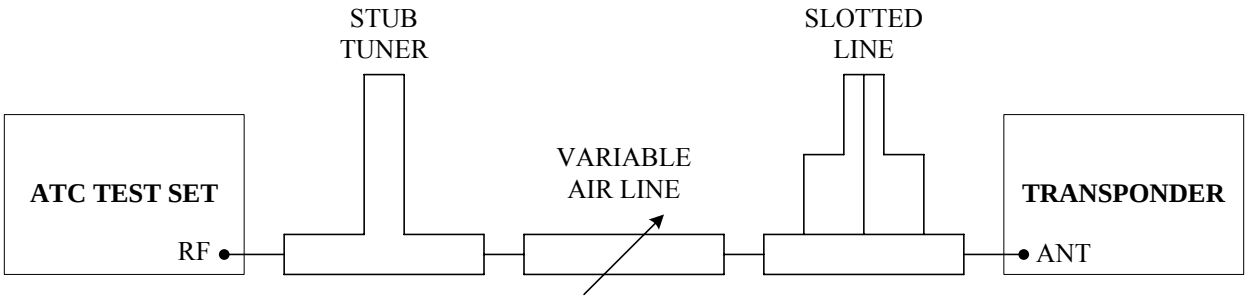

Figure 2-25:

2.4.2.2.2 RF Peak Power Output (§2.2.3.2)

Equipment Required:

ATC Test Set with P_4 capability (TIC T-50-3A/4B, or equivalent).
Wide Band Dual Channel Oscilloscope (HP 1710B, or equivalent).

Measurement Procedure:

Step l ATCRBS Power Output (§2.2.3.2)

Connect the equipment as shown in Figure 2-26. Set the transponder for a 14 (7777) pulse reply. Interrogate the transponder with a standard Mode A interrogation and measure the single pulse having the least RF power output. While varying the interrogation rate from 100 interrogations per second to the

maximum interrogation rate specified for the transponder, determine that the power output meets the requirements of §2.2.3.2.

Repeat the procedure measuring the single pulse having the most RF power output.

Step 2 Mode S Power Output (§2.2.3.2)

Repeat Step l with a standard Mode A ATCRBS/Mode S All-Call interrogation at standard rate only.

2.4.2.2.3 Unwanted Power Output (§2.2.3.3 and §2.2.22.f)

Equipment Required:

Test Set with Mode S capability.
Spectrum Analyzer (HP 8535A, or equivalent).
Directional Coupler (HP 796D, or equivalent).

Note: *For test equipment protection, the transponder transmitter modulation may be disabled by external means.*

Measurement Procedure:

Connect the equipment as shown in Figure 2-32. Do not interrogate the transponder. Measure the RF output power between squitter transmission periods.

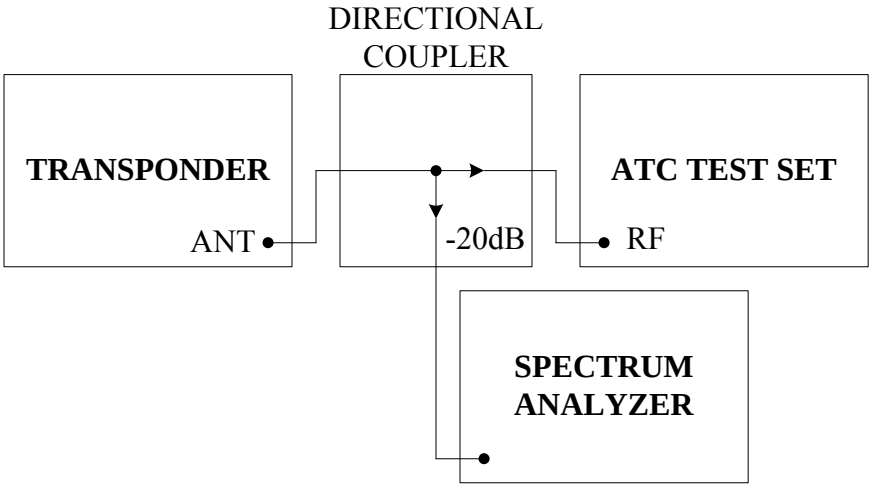

Figure 2-32:

DRAFT © 2007 RTCA, Inc.

2.4.2.2.4 Reply Rate Capability

Equipment Required:

Mode S Transponder Test Set.

Measurement Procedure:

Step 1 Continuous Reply Rate Capability (§2.2.3.4.1.a and §2.2.3.4.2)

Set the transponder for a 15-pulse ATCRBS reply. Interrogate the transponder at a constant rate of 500 ATCRBS interrogations per second plus 50 Mode S interrogations (with short replies) per second. Determine reply ratio for each type of interrogation. Measure the output power and frequency. If the transponder is equipped for long Mode S reply formats, repeat the test with 16 (24 if also equipped with the enhanced data link protocols) of the 50 Mode S interrogations requiring long replies.

Step 2 100 Milliseconds Peak Reply Rate Capability (§2.2.3.4.1 b & c and §2.2.3.4.2)

Set the transponder for a 15-pulse ATCRBS reply. Interrogate the transponder with periodic bursts of ATCRBS and Mode S interrogations as follows: 120 ATCRBS interrogations (100 if the equipment is intended for installation in aircraft that operate at altitudes not exceeding 15,000 feet) plus 18 Mode S interrogations (with short replies), each type of interrogation approximately uniformly spaced within a single 0.1-second interval, followed by a 0.9-second interval with no interrogations. Determine reply ratio for each type of interrogation. Measure the output power and frequency. If the transponder is equipped for long Mode S reply formats, repeat the test with 6 (9 if also equipped with the enhanced data link protocols) of the 18 Mode S interrogations requiring long replies.

Step 3 25 Millisecond Peak Reply Rate Capability (§2.2.3.4.2)

Set the transponder for a 15-pulse ATCRBS reply. Interrogate the transponder with periodic bursts of ATCRBS and Mode S interrogations as follows: 30 ATCRBS interrogations (25 if the equipment is intended for installation in aircraft that operate at altitudes not exceeding 15,000 feet) plus eight Mode S interrogations (requiring short replies), each type of interrogation burst approximately uniformly spaced within a single 25-millisecond interval, followed by a 975-millisecond interval without interrogations. Determine reply ratio for each type of interrogation. Measure output power and frequency. If the transponder is equipped for long Mode S reply formats, repeat the test with 4 (6 if also equipped with the enhanced data link protocols) of the 8 Mode S interrogations requiring long replies.

Step 4 1.6 Milliseconds Peak Reply Rate Capability (§2.2.3.4.1 and §2.2.3.4.2)

Repeat Step 3 with the following modification:

Use two ATCRBS interrogations plus four Mode S interrogations (with short replies), each type of interrogation approximately uniformly spaced within a single l.6-millisecond interval, followed by a 998.4-millisecond interval with no interrogation. Determine reply ratio for each type of interrogation. Measure

DRAFT © 2007 RTCA, Inc.

output power and frequency. If the transponder is so equipped repeat the test with two of the four Mode S interrogations having long replies.

2.4.2.2.5 ATCRBS Reply Rate Limiting (§2.2.7.3.1)

Equipment Required:

ATC Test Set (T-50-3A/4A (2 required), or equivalent).
Wide Band Dual Channel Oscilloscope (HP 1710B, or equivalent).
Frequency Counter (HP 5381A, or equivalent).

Measurement Procedure:

Connect the equipment as shown in Figure 2-27 and Figure 2-29.

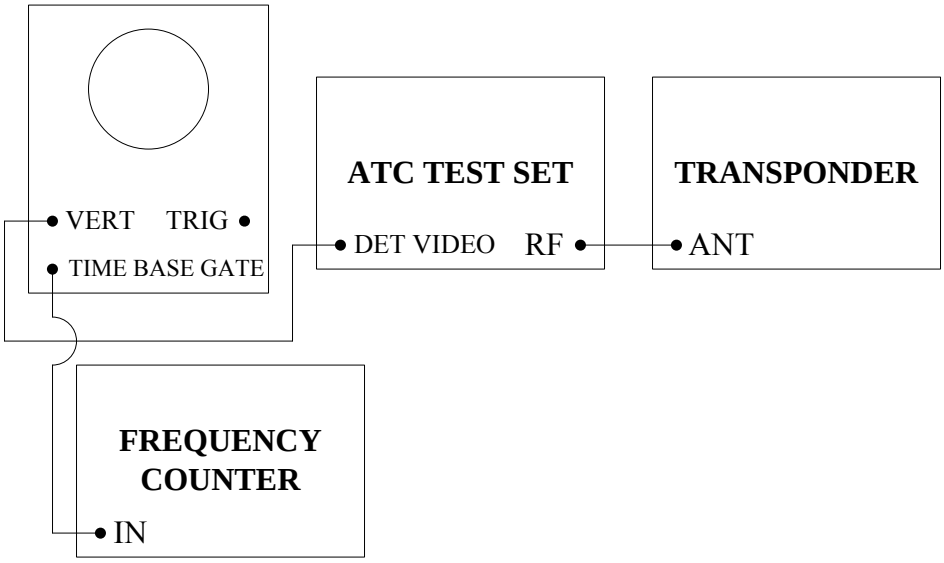

Figure 2-29:

Step 1 Determination of Reply Rate Limit

Set the Mode A code to 0000. Interrogate the transponder on Mode A with a signal 20 dB above MTL at a variable rate starting at 500 per second. Gradually increase the interrogation rate while observing the reply count over 1-second intervals. The highest count observed is the reply rate limit. Verify that it does not exceed 2000 continuous replies per second.

Step 2 Sensitivity Reduction

Set the transponder's Mode C code to 0000 and its Mode A code to any value other than 0000. Interrogate the transponder with the sum of a) a Mode C interrogation 20 dB above MTL at a continuous rate equal to the reply rate limit determined in Step 1 and b.) a second unsynchronized Mode A interrogation 3 dB above MTL at a continuous rate equal to 50% of the reply rate limit determined in Step 1. Verify that the transponder replies to at least 90% of the interrogations at the signal level 20 dB above MTL and that it does not reply to more than 10% of the interrogations at the signal level 3 dB above MTL.

DRAFT © 2007 RTCA, Inc.

2.4.2.3 Reply Pulse Characteristics

2.4.2.3.1 ATCRBS Reply Pulse Characteristics (§2.2.4.1)

Equipment Required:

ATC Test Set (TIC T-50-3A/4A, or equivalent).
Wide Band Dual Channel Oscilloscope (HP 1710B, or equivalent).

Measurement Procedure:

Step 1 ATCRBS Reply Pulse Spacing (§2.2.4.1.1, §2.2.4.1.2, §2.2.4.1.5)

Connect the equipment as shown in Figure 2-26. Interrogate with a standard Mode A interrogation. Use a 14-pulse reply group (7777) and display the transmitted pulses on the wide band oscilloscope. Measure the spacing of each transmitted pulse with respect to the first framing pulse and the spacing between information pulses.

Step 2 ATCRBS Reply Pulse Shape (§2.2.4.1.4)

Using a standard ATCRBS Mode A interrogation, measure the duration of each reply pulse. Measure rise and decay times of each pulse. Measure the pulse amplitude variations of each pulse with respect to all other pulses in the reply train.

CAUTION: *If the detector is not known to be linear, checks should be made to determine what amplitude points on the detected pulse correspond to the 10 percent and 90 percent amplitude points of the RF pulses.*

In addition, checks should be made to determine the rise time of the detector.

Step 3 SPI Pulse (§2.2.4.1.3, §2.2.4.1.4 and §2.2.4.1.5)

Momentarily activate the SPI pulse control. Interrogate the transponder with a standard ATCRBS Mode-A interrogation. Measure the position of the SPI pulse with respect to the last framing pulse and the time the pulse remains in the reply train. Measure the width of the SPI pulse. With the SPI pulse activated, interrogate the transponder with a standard ATCRBS Mode-C interrogation. Verify that the SPI pulse is not present in the reply train.

DRAFT © 2007 RTCA, Inc.

2.4.2.3.2 ATCRBS Reply Delay and Jitter (§2.2.4.1.6)

Equipment Required:

ATC Test Set (TIC T-50-3A/4A, or equivalent).
Wide Band Dual Channel Oscilloscope (HP 1710B, or equivalent).

Measurement Procedure:

Step l Reply Delay (§2.2.4.1.6.a)

Connect the equipment as shown in Figure 2-26. Interrogate the transponder with a standard Mode A interrogation. Synchronize the oscilloscope using the leading edge of P_3.

Measure the average delay between the leading edge of P_3 and the leading edge of the first reply pulse at the 50 percent amplitude points when the signal level is varied in increments of 5 dB between minimum triggering level and -21 dBm.

Step 2 Reply Jitter (§2.2.4.1.6.b)

Repeat Step l measuring the extreme positions of the leading edge of the first reply pulse at the various signal levels from 3 dB above minimum triggering level to -21 dBm.

Step 3 Reply Delay Variation (§2.2.4.1.6.c)

Repeat Step l using alternate Mode C and Mode A interrogations. Use signal levels from MTL +3 dB to -21 dBm. Measure the reply delay variation between modes.

2.4.2.3.3 Mode S Replies (§2.2.4.2)

Equipment Required:

ATC Test Set with P_4 Capability (TIC T-50-3A/4B, or equivalent).
Wide Band Dual Channel Oscilloscope (HP 1710B, or equivalent).

Measurement Procedure:

Step l Mode S Preamble (§2.2.4.2.1)

Connect the equipment as shown in Figure 2-26. Interrogate the transponder with a standard Mode A ATCRBS/Mode S All-Call. Display the Mode S reply on the oscilloscope. Measure the pulse duration of the first four reply pulses. Measure pulse spacing between the leading edge of the first and each of the second, third and fourth pulses.

DRAFT © 2007 RTCA, Inc.

Step 2 Mode S Reply Data Pulses (§2.2.4.2.2)

Note: *For Steps 2 through 6, examine pulses at the beginning, middle and end of the replies.*

Connect equipment as in Figure 2-26. Measure the pulse duration for both short and long reply pulses throughout the Mode S reply.

Measure the pulse spacing of the fifth reply pulse with reference to the first reply pulse.

Step 3 Mode S Reply Amplitude Variation (§2.2.4.2.3.a)

Connect the equipment as in Figure 2-26. Measure the maximum power differential between pulses in the Mode S reply.

Step 4 Mode S Reply Pulse Shape (§2.2.4.2.3.b)

Measure the rise time of the reply pulses.

CAUTION: *If the detector is not known to be linear, checks should be made to determine what amplitude points on the detected pulse correspond to the 10 percent and 90 percent amplitude points of the RF pulses. In addition, checks should be made to determine the rise and decay time of the detector.*

Step 5 Mode S Reply Pulse Shape (§2.2.4.2.3.c)

Repeat the measurement for decay time.

Step 6 Mode S Reply Pulse Spacing Tolerance (§2.2.4.2.4)

Connect equipment as in Figure 2-26. Determine that the leading edge of any reply pulse is within 50 nanoseconds of its assigned position.

Step 7 Mode S Reply Delay and Jitter (§2.2.4.2.5.a)[4]

Interrogate the transponder with a standard Mode S interrogation using any format for which a reply is required. Synchronize the oscilloscope to the interrogation. Measure the extreme positions of the leading edge of the first reply pulse, when the signal level is varied between 3 dB above the MTL and -21 dBm; and the delay between the P_6 sync phase reversal transient and the leading edge of the first reply pulse.

Step 8 ATCRBS/Mode S All-Call Reply Delay and Jitter (§2.2.4.2.5.b)

Interrogate the transponder with a standard ATCRBS/Mode S All Call interrogation. Synchronize the oscilloscope to the interrogation. Measure the

[4] This test requires the Mode S test set described in §2.4.1.i. and a sufficiently accurate time-base marker generator. The total delay variation is only ±0.4%. Many oscilloscopes do not provide this accuracy. Auxiliary crystal referenced markers synchronous with the interrogation are required.

DRAFT © 2007 RTCA, Inc.

extreme positions of the leading edge of the first reply pulse, when the signal level is varied between 3 dB above the MTL and -21 dBm; and the delay between the leading edge of P_4 and the leading edge of the first reply pulse.

2.4.2.3.4 Frequency Spectrum of Mode S Replies (§2.2.4.2.3.d)

Equipment Required:

Test Set with Mode S capability.
Spectrum Analyzer (HP 8535A, or equivalent).
Directional Coupler (HP 796D, or equivalent).

Measurement Procedure

Connect the equipment as shown in Figure 2-32. Interrogate the transponder with a standard Mode S surveillance-identity interrogation and observe the spectral response of the reply.

2.4.2.4 Side Lobe Suppression (§2.2.5 and §2.2.8.5)

Equipment Required:

ATC Test Set [T-50-3A/4A (2 required), or equivalent].
Wide Band Dual Channel Oscilloscope (HP 1710B, or equivalent).
3 Port Divider (Weinschel 1506, or equivalent).

Measurement Procedure:

Step 1 SLS Decoding [§2.2.5.1.a (1) and (3), §2.2.5.1.b and §2.2.8.5]

Connect the equipment as shown in Figure 2-27. Interrogate the transponder with a standard Mode A interrogation including a P_2 pulse. RF signal level to be at MTL +3 dB; P_2 level = P_1 level. As the P_1 - P_2 spacing is varied over 1.0 to 3.0 microseconds, determine the reply efficiency. Adjust the P_1 - P_2 spacing to the nominal value and insert a 0.8 microsecond pulse (equal in amplitude to P_1 and P_2) such that it occurs 8 microseconds before P_2. Repeat with a 21-microsecond spacing between the inserted pulse and P_2. Verify that the reply ratio is less than 1 percent.

Step 2 SLS Dynamic Range [§2.2.5.1.a (2) and §2.2.5.1.c]

Repeat Step 1 at RF signal levels: -60 dBm, -40 dBm and -21 dBm.

Step 3 SLS Pulse Ratio (§2.2.5.1.b)

Repeat Step 1 at RF signal levels between MTL +3 dB, (-60 dBm, -40 dBm and -21 dBm). Set P_2 level 9 dB below P_1 level.

DRAFT © 2007 RTCA, Inc.

Step 4 SLS Pulse Ratio (§2.2.5.1 a and b)

Repeat Steps 1, 2 and 3 with an ATCRBS Mode A/Mode S All-Call interrogation (retaining the 8-microsecond spacing between P_1 and P_3, and add P_4).

Step 5 Suppression Duration [§2.2.5.1.d (l)]

Interrogate the transponder at 450 interrogations per second with a P_1- P_2 pulse pair, followed after 50 microseconds by a P_1- P_3 (Mode A, 8 microseconds) pulse pair. The interrogation level **shall** be set at -24 dBm, reply code selection is not consequential. Reduce the spacing of the P_1- P_3 pair with respect to the P_1- P_2 pair until the transponder ceases to reply. The time interval between the leading edges of P_2 and P_1 (of the P_1- P_3 pair) is the suppression duration S(8).

Repeat above procedure using Mode C (21-microsecond spacing) for the P_1- P_3 pair. The result will be suppression duration S(21).

Step 6 Suppression Reinitiation [§2.2.5.1.d (3)]

Connect the equipment as shown in Figure 2-27. With an interrogation rate of 450 interrogations per second, generate a "first" P_1- P_2 pair followed by a "second" P_1- P_2 pair such that the spacing between P_2 of the first pair and P_1 of the second pair is S(8) +2 microseconds. Generate a "third" pair, P_1- P_3, Mode A to follow the second pair after 50 microseconds. All pulse levels **shall** be set to -24 dBm; reply code is inconsequential. Reduce the spacing of the P_1- P_3 pair in respect to the P_1- P_2 pairs and determine suppression duration S(8) as in Step 4. Repeat the test using Mode C spacing for the P_1- P_3 pair and determine suppression duration S(21).

Step 7 Recovery After Suppression [§2.2.5.1.d (4)

Repeat Step 5 using the following signal levels: P_1- P_2 pair: -30 dBm; P_1- P_3 pair: MTL. A reply efficiency of 90 percent should be observed when the P_2 (suppression) P_1 (interrogation) spacing is no more than one microsecond greater than S(8, 21) determined in previous steps.

2.4.2.5 Pulse Decoder Characteristics (§2.2.6)

Equipment Required:

ATC Test Set with P_4 Capability (TIC T-50-3A/4B, or equivalent).
Wide Band Dual Channel Oscilloscope (HP 1710B, or equivalent).
Mode S Transponder Test Set (Required for Steps 8 through 10).

Measurement Procedure:

Step 1 Pulse Level Tolerances, ATCRBS/Mode S All-Call (§2.2.6.1.1)

Connect the equipment as shown in Figure 2-26. Interrogate at the standard rate and at an input level 10 dB above MTL. Use an ATCRBS Mode A interrogation

DRAFT © 2007 RTCA, Inc.

followed by a 1.6-microsecond P_4 pulse in its nominal position. Vary the level of the P_4 pulse between -10 and 0 dB with respect to P_3. Verify the changeover from ATCRBS to Mode S replies at the relative P_4 levels specified in §2.2.6.1.1 a and b.

Repeat the test at input signal levels -60, -40 and -21 dBm. Repeat the tests using an ATCRBS Mode C interrogation.

Step 2 Pulse Level Tolerances, ATCRBS-Only All-Call (§2.2.6.1.2)

Use setup and signal levels as in Step l above but employ a 0.8 microsecond P_4. Vary the level of the P_4 pulse between -10 and 0 dB with respect to P_3. Verify the changeover from ATCRBS replies to no replies at the relative P_4 levels specified in §2.2.6.1.2 a and b.

Repeat the test at input signal levels -60, -40 and -21 dBm. Repeat the tests using an ATCRBS Mode C interrogation.

Step 3 Pulse Position Tolerances, $P_1/_3$, ATCRBS-Type Interrogations (§2.2.6.2 a and b)

Use setup and signal levels as in Step l above. Interrogate with:

a. ATCRBS Mode A.
b. ATCRBS Mode C.
c. ATCRBS Mode A/Mode S All-Call.
d. ATCRBS Mode C/Mode S All-Call.
e. ATCRBS Mode A-Only All-Call.
f. ATCRBS Mode C-Only All-Call.

For each interrogation type vary the P_1- P_3 spacing first within the required acceptance range (§2.2.6.2 a) and verify that the reply ratio is at least 90 percent. Then vary the P_1- P_3 spacing to fall out of the permitted acceptance range (§2.2.6.2.b) and verify that not more than 10 percent of the replies are generated. There **shall** not be any replies to either of the ATCRBS-Only All-Call modes.

Step 4 Pulse Position Tolerances, P_4, ATCRBS/Mode S All-Calls (§2.2.6.2 a and c)

Use setup and signal levels as in Step 1 and interrogate with:

a. ATCRBS Mode A/Mode S All-Call.
b. ATCRBS Mode C/Mode S All-Call.

For both interrogation types, vary the P_3- P_4 spacing first within the required acceptance range and then beyond the permitted acceptance range. Determine conformance to requirements as in Step 3.

Step 5 Pulse Duration Tolerances, ATCRBS Interrogations (§2.2.6.3 a and b)

Use setup and signal levels as in Step l above and interrogate with:

a. ATCRBS Mode A.
b. ATCRBS Mode C.

DRAFT © 2007 RTCA, Inc.

For both interrogation types, vary the P_1 duration first within the acceptance range (§2.2.6.3.a) and then beyond the acceptance range (§2.2.6.3.b). Verify reply ratio. Repeat test varying the P_3 duration in the same manner.

Step 6 Pulse Duration Tolerance, ATCRBS/Mode S All-Call (§2.2.6.3 a and b)

Use setup and signal levels as in Step l above and interrogate with:

a. ATCRBS Mode A/Mode S All-Call.
b. ATCRBS Mode C/Mode S All-Call.

For both interrogation types vary the P_1 duration first within the acceptance range (§2.2.6.3.a) and then beyond the acceptance range (§2.2.6.3.b). Verify reply ratio. Repeat test varying the P_3 duration in the same manner. Repeat test varying the P_4 in the same manner.

Step 7 Short Pulse Rejection, ATCRBS-Type Interrogations (§2.2.6.3.c)

Use setup as in Step 1 and set signal input level to MTL for each of the following interrogation types:

a. ATCRBS Mode A.
b. ATCRBS Mode C.
c. ATCRBS Mode A/Mode S All-Call.
d. ATCRBS Mode C/Mode S All-Call.

For each interrogation type vary the P_1 duration between 0.2 and 0.7 microsecond and verify that less than 10 percent of the replies are generated when the pulse has less than 0.3 microsecond duration. Repeat test varying the P_3 duration in the same manner. Repeat tests at 5 dB increments up to -45 dBm input level.

Step 8 Sync Phase Reversal Position Tolerance (From P_2) (§2.2.6.4)

Set the Mode S test set to generate a standard Mode S-Only All-Call interrogation at MTL +3 dB. Vary the spacing between the leading edge of P_2 and the P_6 sync phase reversal transient by ±200 nanoseconds from the nominal 2.75 microseconds. Measure the range over which Mode S replies are received. Repeat for P_1 levels between -50 dBm and -21 dBm in 5 dB steps.

Note: *Steps 8 and 9 require the Mode S Transponder Test Set.*

Step 9 Sync Phase Reversal Position Tolerance (From P_6) (§2.2.6.4)

Set the Mode S test set to generate a standard Mode S-Only All-Call interrogation at MTL +3 dB. Vary the spacing between the leading edge of P_6 and the P_6 sync phase reversal transient by ±200 nanoseconds from the nominal 1.25 microseconds. Measure the range over which Mode S replies are received. Repeat for P_1 levels of -50 dBm and -21 dBm in 5 dB steps.

Note: *Either Step 8 or Step 9 is to be used, depending on the design of the transponder.*

DRAFT © 2007 RTCA, Inc.

Step 10 Simultaneous Interrogations (§2.2.8.5)

Use setup, signal levels, and formats as in Step 5 above and insert a 0.8 microsecond pulse (equal in amplitude to P_1 and P_3) such that it occurs 8 microseconds before the P_3 pulse of a Mode C interrogation. Observe that all replies are Mode C replies.

2.4.2.6 Transponder Desensitization and Recovery (§2.2.7)

Equipment Required:

ATC Test Set [TIC T5OA-3A/4A (2 required), or equivalent].
Wide Band Dual Channel Oscilloscope (HP 1710B, or equivalent).
3 Port Power Divider (Weinschel 1506, or equivalent).
Mode S Transponder Test Set.

Measurement Procedure:

Step 1 ATCRBS Single Pulse Desensitization and Recovery (§2.2.7.1.1 and §2.2.7.2)

Connect the equipment as shown in Figure 2-27. Set the master test set to generate a single pulse not less than 0.7 microsecond wide at the standard ATCRBS interrogation rate and a power level equal to 50 dB above MTL. Set the slave test set to generate an ATCRBS Mode A interrogation delayed three (3) microseconds from the trailing edge of the single pulse. Determine the amplitude of the slave test set signal required to produce 90 percent reply efficiency. Repeat for master to slave test set delays of 6, 10 and 15 microseconds.

Note: *Steps 2 through 7 require replacement of one of the ATC test sets by a Mode S transponder test set.*

Step 2 Recovery from a Mode S Interrogation Requiring No Reply (§2.2.7.2.1)

With the equipment connected as shown in Figure 2-27, set the master test set to generate a short Mode S surveillance interrogation with broadcast address. Set the slave test set to generate an ATCRBS Mode A interrogation at a power level equal to 3 dB above MTL. Measure the delay time between the master and the slave test sets necessary to elicit a reply efficiency of 90%.

Step 3 Recovery from a Mode S Comm-C Interrogation (§2.2.7.2.1)

With equipment connected as shown in Figure 2-27, set the master set to generate the initial segment of a properly addressed Comm-C interrogation at a signal level of -21 dBm. Set the slave test set to generate an ATCRBS Mode A interrogation delayed 45 microseconds from the sync phase reversal of the master interrogation. Determine the amplitude of the slave test signal required to produce 90 percent reply efficiency.

Step 4 Recovery from a Suppression Pair or Unaccepted ATCRBS/Mode S or ATCRBS-Only All-Calls (§2.2.7.2.2 and §2.2.7.2.4)

With equipment connected as shown in Figure 2-27, set the master test set to generate a P_1 - P_2 pulse pair at the ATCRBS standard interrogation rate and a

DRAFT © 2007 RTCA, Inc.

power level equal to -35 dBm. Set the slave test set to generate a Mode S-Only All-Call interrogation delayed 10 microseconds from the trailing edge of the P_2 pulse of the master test set interrogation. Determine the amplitude of the slave test set signal required to produce 90% reply efficiency.

Repeat the procedure with an ATCRBS-Only All-Call in place of the suppression pair. Set the Mode S-Only All-Call from the slave test set delayed 10 microseconds from the trailing edge of the P_4 pulse of the master test set interrogation.

Lock out transponder to All-Calls (non-selective) and repeat procedure with P_4-type All-Call interrogations in place of the suppression pair. Set the II field of the Mode S All-Call to a value other than ZERO (0) so that it will not be affected by the lock-out condition.

Step 5 Narrow Pulse Performance (§2.2.7.1.2)

With the equipment connected as shown in Figure 2-27, set the master test set to generate a single pulse less than 0.7 microsecond wide at the standard ATCRBS interrogation rate and a power level equal to 50 dB above MTL. Set the slave test set to generate an ATCRBS Mode A interrogation delayed three (3) microseconds from the trailing edge of the single pulse. Determine the amplitude of the slave test set signal required to produce 90 percent reply efficiency. Repeat for master to slave test set delays of 6, 10 and 15 microseconds.

Step 6 Dead Time (§2.2.7.2.5)

With the equipment connected as shown in Figure 2-27, set the master test set to generate an ATCRBS Mode A interrogation at a level of -21 dBm. Set the slave test set to generate a Mode S-Only All-Call interrogation at a level of 3 dB above MTL. Determine the time delay between the end of the reply to the master interrogation and the start of the slave interrogation that elicits a 90 percent reply efficiency from the transponder. Repeat with the master test set generating a Mode S-Only All-Call at -21 dBm and the slave test set generating an ATCRBS Mode A interrogation at MTL +3 dB.

Step 7 Recovery From a Mode S Interrogation Which Has Not Been Accepted (§2.2.7.2.3)

Connect the equipment as shown in Figure 2-27. Set the master test set to generate a standard Mode S surveillance interrogation with an incorrect address. Set the slave test set to generate an ATCRBS/Mode A interrogation. Measure the delay time between the master and slave test sets necessary to elicit a reply efficiency of 90%.

2.4.2.7 Response to Interference (§2.2.8)

Equipment Required:

Mode S Transponder Test Set.
ATC Test Set (TIC T-50-3A/4A, or equivalent).
Wide Band Dual Channel Oscilloscope (HP 1710B, or equivalent).
3 Port Power Divider (Weinschel 1506, or equivalent).

DRAFT © 2007 RTCA, Inc.

Measurement Procedure:

With the equipment connected as shown in Figure 2-27, interrogate the transponder with the standard Mode S-Only All-Call interrogation at a signal level of -50 dBm and follow Steps l through 4 below.

Step 1 Low Level Asynchronous Interference (§2.2.8.1)

Insert a 0.8-microsecond wide pulse [defined in §2.4.1.i (ll)] with amplitude 12 dB below P_1 of the standard Mode S-Only All Call at a repetition rate of 10,000 Hz. Measure reply ratio. Repeat the test for all signal levels between -65 and -21 dBm in 5-dB increments.

Note: *Take care to avoid synchronization of the 10,000 Hz rate with the Mode S standard rate.*

Step 2 Standard Interference Pulse (§2.2.8.2) and Mode S SLS (§2.2.5.2)

Insert the interfering pulse (duration: 0.8 microsecond, level 6 dB below P_6) at a position l.8 microseconds after the leading edge of P_6 of a standard Mode S-Only All-Call.

Observe the reply ratio while slowly moving the interfering pulse from its initial position to the end of P_6. Repeat the test for all signal levels between -68 and -21 dBm in 5-dB increments.

Repeat the test with an interference pulse level 3 dB below the P_6 level.

Insert the interfering pulse (now acting as P_5) 0.85 microsecond after the leading edge of P_6 and use a level 3 dB above the level of P_6. Use signal levels between MTL +3 dB and -21 dBm in 5-dB increments. Reply ratio in all cases should be 10 percent or less (§2.2.5.2.a).

Reduce level of P_5 to a value 12 dB below the level of P_6 and repeat the test at signal levels from MTL +3 dB to -21 dBm in 5-dB increments. Reply ratio should be 99 percent or more (§2.2.5.2.b).

Step 3 Pulse Pair Interference (§2.2.8.3)

Insert a 0.8 microsecond pulse pair spaced 2.0 microseconds apart [§2.4.1.i(11)] with amplitude 9 dB below P_1 of the standard Mode S-Only All-Call, at a position such that the leading edge of the pulse pair occurs 0.25 microseconds after the leading edge of P_1.

Record the reply ratio while moving the interfering pulse pair in 0.25 microsecond steps from its initial position to a position 0.25 microseconds after the falling edge of P_6. Determine the average reply efficiency from the recorded values.

DRAFT © 2007 RTCA, Inc.

Repeat the test for all input levels between –68 dBm and –21 dBm in 5-dB increments.

Step 4 DME and JTIDS Interference Tests (§2.2.8.4)

Insert 3.5-microsecond wide pulse pairs spaced 12 microseconds apart with amplitudes of -30 dBm at a rate of 3,600 randomly spaced pulse pairs per second. Observe the reply ratio as the frequency of the interfering signal is varied over the ranges of 962 to 1020 MHz and 1041 to 1213 MHz.

Repeat the test using 3.5-microsecond wide pulse pairs spaced 30 microseconds apart.

Repeat the test using 6.4-microsecond wide pulse pairs at a random rate of 2000 pulses per second, with an amplitude of -80 dBm and a frequency of 1030 MHz.

2.4.2.8 Undesired Replies (§2.2.9)

Equipment Required:

ATC Test Set (T-50-3A/4A, or equivalent).
Wide Band Dual Channel Oscilloscope (HP 1710B, or equivalent).
Frequency Counter (HP 5381A, or equivalent).

Measurement Procedure:

Connect the equipment as shown in Figure 2-29. Set the ATC test set to ZERO interrogation rate. Set the oscilloscope to a total sweep time of 100 microseconds and the internal trigger to allow one sweep for each reply group transmitted by the transponder. Count the number of replies for a minimum of one minute. The squitter generation function may be disabled for this test.

2.4.2.9 Self-Test and Monitors (§2.2.10)

Equipment Required:

ATC Test Set (TIC T-50-3A/4A, or equivalent).
Wide Band Dual Channel Oscilloscope (HP 1710B, or equivalent).
RF Attenuator (HP 394A, or equivalent).
ATC Transponder (Similar to unit under test - transmitter disabled).
Frequency Counter (HP 5381A, or equivalent).

Measurement Procedure:

Step l Self-Test Interrogation/Reply Rate (§2.2.10.1 a and c)

Connect the equipment as shown in Figure 2-29. Set the ATC test set to ZERO PRF, and the oscilloscope to a total sweep time of 50 microseconds, using internal trigger. Activate the self-test function (if provided) of the transponder under test and determine the reply rate to the self-test interrogation.

The squitter generation function may be disabled for this test.

DRAFT © 2007 RTCA, Inc.

Step 2 Self-Test Interrogation Level (§2.2.10.1.b)

Arrange coax connections as shown in Figure 2-30, position A. Activate the self-test function of the transponder and adjust the RF attenuator until the other transponder just triggers, as indicated by the presence of suppression pulses.

Without changing the RF attenuator setting, change the coax connections to position B. Set the ATC test set to the interrogation rate determined in Step 1 and interrogate in Mode A. Adjust the RF level of the ATC test set until transponder number two just triggers. Record the ATC test output level.

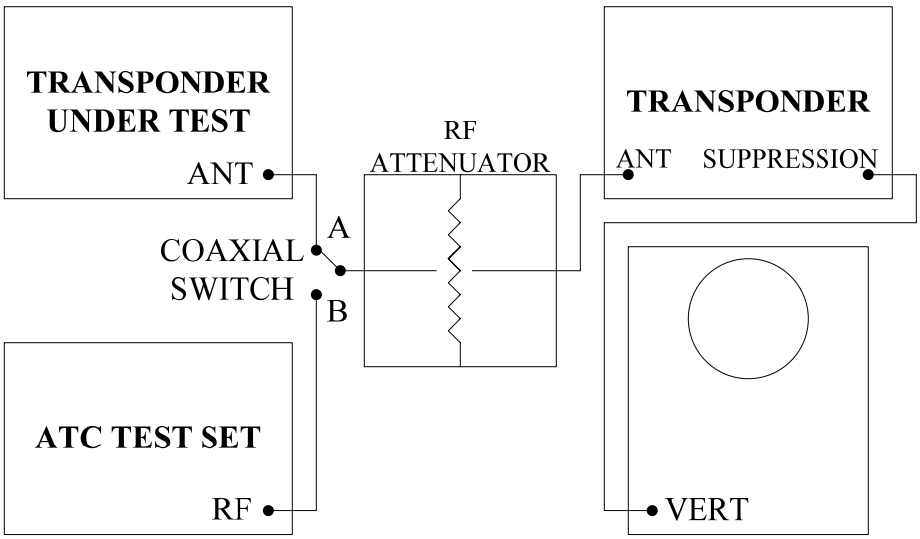

Figure 2-30:

2.4.2.9.1 Squitter Monitor (§2.2.10.2)

A specific test procedure for this function is not described in this subsection. Such a test requires that the manufacturer artificially disable the squitter generation function. The detailed procedure for proving this capability must be left to the discretion of the manufacturer.

2.4.2.9.2 Failure Annunciator (§2.2.10.4)

As a minimum, the manufacturer must demonstrate that failures detected by the self-test or monitors are properly detected and that those failures cause the "valid" output to assume an invalid state.

2.4.2.10 Interference Suppression Pulse Response (§2.2.11)

Equipment Required:

ATC Test Set (TIC T-50-3A/4A, or equivalent).
Wide Band Dual Channel Oscilloscope (HP 1710B, or equivalent).

DRAFT © 2007 RTCA, Inc.

Measurement Procedure:

Connect the equipment as shown in Figure 2-31. Interrogate on Mode A at 150 interrogations per second and set the signal level to -21 dBm. Apply the suppression pulse for which the equipment is designed. Starting with a delay of more than 15 microseconds, adjust for minimum delay between the trailing edge of the suppression pulse and the leading edge of the interrogation pulse pair which provides 90 percent reply efficiency. Determine value of minimum delay.

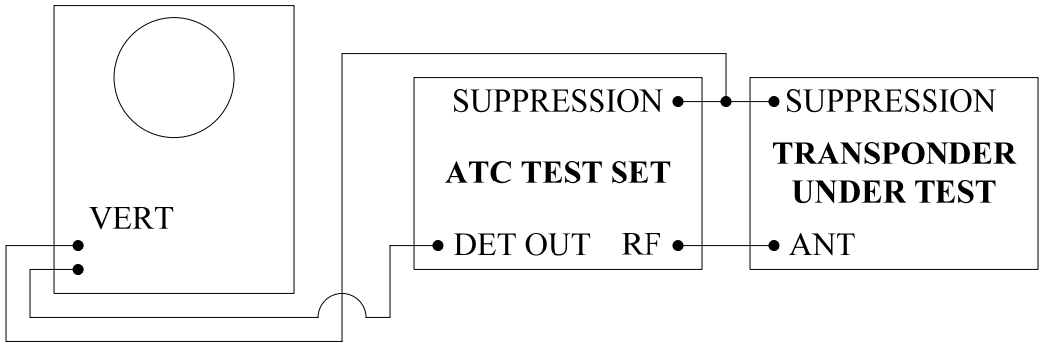

Figure 2-31:

2.4.2.11 Diversity Operation (§2.2.12 and §2.2.22.d)

Equipment Required:

Two means of generating identical ATCRBS and Mode S interrogations that can be delayed from each other from 125 to 375 nanoseconds. These two generators must also have independent control of power level.

Means of determining the antenna terminal that generates the reply.

Means of determining the reply power level on both antennas simultaneously.

Means of determining reply delay for each channel and between channels.

DRAFT © 2007 RTCA, Inc.

Measurement Procedure:

Note: *Because the specifications for diversity operations are symmetrical in all respects, channels are arbitrarily designated A and B.*

Step 1 Single Channel Test (§2.2.12.3 and §2.2.12.4)

When measuring channel A and B parameters take care that any cables used for measurements are of equal length and equal loss. Interrogate channel A only, while monitoring channel A and B. At signal level MTL +3 dB use the following types of interrogations and record the listed observations:

ATCRBS Mode A.
ATCRBS Mode C.
ATCRBS Mode A/Mode S All-Call.
ATCRBS Mode C-only All-Call.
Mode S formats UF=4, 11, and if so equipped, 21.

For signal levels of -50 dBm and -21 dBm use an ATCRBS Mode C and a Mode S format of UF=4 types of interrogations and record the listed observations.

Observe:

Correct reply ratio.
Correct reply channel.
Power level of replies from channel A (§2.2.12.3).
Power level of replies from channel B (§2.2.12.3).

Record: Reply delay for each interrogation signal type and for the signal levels as specified.

Repeat the above test reversing channels.
Compare records of reply delays for conformance with §2.2.12.4.

Step 2 Selection Test (§2.2.12.1)

Synchronize the interrogations to channels A and B so that they are 0.125 +0.00/-0.04 microseconds apart where channel A is first.

Use an ATCRBS Mode C and a Mode S UF=4 to interrogate at a power level on channel A of MTL and a power level on channel B of MTL +3 dB.

Observe that 90 percent of the replies are on channel B.

Use an ATCRBS Mode C and a Mode S UF=4 to interrogate at a power level on channel A of MTL +3 dB and a power level on channel B of MTL.

Observe that 90 percent of the replies are on channel A.

Synchronize the interrogations to channels A and B so that they are 0.125 +0.00/-0.04 microseconds apart where channel B is first.

Use an ATCRBS Mode C and a Mode S UF=4 to interrogate at a power level on channel A of MTL and a power level on channel B of MTL +3 dB.

Observe that 90 percent of the replies are on channel B.

DRAFT © 2007 RTCA, Inc.

Use an ATCRBS Mode C and a Mode S UF=4 to interrogate at a power level on channel A of MTL +3 dB and a power level on channel B of MTL.

Observe that 90 percent of the replies are on channel A.

Step 3 Delay-Selection Test (§2.2.12.2)

Synchronize the interrogations to channels A and B so that they are 0.375 +.040/-0.00 microseconds apart where channel A is first.

Use an ATCRBS Mode C and a Mode S UF=4 to interrogate at a power level on channel A of MTL +3 and a power level on channel B of -50 dBm.

Observe that 90 percent of the replies are on channel A.

Synchronize the interrogations to channels A and B so that they are 0.375 +0.040/-0.00 microseconds apart where channel B is first.

Use an ATCRBS Mode C and a Mode S UF=4 to interrogate at a power level on channel A of -50 dBm and a power level on channel B of MTL +3.

Observe that 90 percent of the replies are on channel B.

Step 4 Squitter Antenna Selection (§2.2.12.5)

Activate the transponder and determine that squitter transmissions occur alternately from the two antennas at the prescribed rate.

2.4.2.12 Data Handling and Interfaces (§2.2.13)

The procedures outlined in this paragraph are intended only to test "data in" and "data out" requirements of the transponder. They do not constitute tests of the transponder's digital logic and protocols. Some tests correspond to requirements of optional features, and therefore are not applicable to all transponders.

2.4.2.12.1 Fixed Direct Data (§2.2.13.1.1)

Equipment Required:

Mode S Transponder Test Set (§2.4.1.i).

Measurement Procedure:

With the transponder RF port connected to the RF port of the Mode S transponder test set, perform the following test sequences.

Step 1 Mode S All-Call Addresses [§2.2.13.1.1.a (l)]

Interrogate the transponder with a Mode S-Only All-Call interrogation with PR, IC and CL Fields set to 0. Verify that the AA field of the transponder reply reflects the address which has been set into the transponder. Twenty-four different addresses consisting of 23 ZEROs and a single ONE **shall** be tested.

Step 2 Mode S Discrete Address [§2.2.13.1.1.a (2)]

Interrogate the transponder with a standard Mode S surveillance-altitude interrogation (UF=4) with the PC, RR, DI and SD fields set to 0 and an address consisting of ONE followed by 23 ZEROs. Verify that the transponder replies with appropriate bits set in the AP field when a like address is set into the transponder, and will not respond when each of the other combination of 23 ZEROs and a single ONE are entered as addresses.

Step 3 Maximum Airspeed (§2.2.13.1.1.b)

Interrogate the transponder with a short special surveillance interrogation (UF=0) with the AQ field set to 1. Verify that the RI field of the transponder reply corresponds to the airspeed code set into the transponder as each of the seven possible airspeed codes is used.

Step 4 Aircraft Identification Data (§2.2.13.1.1.c)

If the transponder inputs aircraft identification data as fixed data, the following test applies. Interrogate the transponder with a short surveillance-altitude (UF=4) with PC, DI and SD fields set to 0 and the RR field set to 18. Set the aircraft identification input to the transponder to 'LLLLLLLL' and verify that the encoded aircraft identification data is correctly transmitted in the MB field (MB Bits 9-56 = 001100001100 ...) of the transponder's reply. Repeat with an aircraft identification input of '33333333' and verify that the encoded aircraft identification data is correctly transmitted in the MB field (MB Bits 9-56 = 110011110011 ...) of the transponder's reply.

Step 5 – Invalid AA

Put the transponder in the Power Off Condition and set the AA to all ZEROs. Turn on the transponder and verify that a transponder error condition is set.

Note : the transponder will normally either go into Standby State, revert to a pure Mode A/C transponder or return to the Power Off Condition.

Repeat this test with the AA set to all ONEs.

Put the transponder in the Power On Condition with an AA set to ONE for the first bit and ZEROs for all other bits. Verify that the transponder functions normally as indicated in steps 1 and 2.

Without putting the transponder in Power Off Condition change the AA to all ZEROs. Verify that the transponder generates a diagnostic error message for maintenance and that it keeps operating using the initial AA read during the power-on initialisation process (first bit set to ONE and all other bits set to ZEROs).

Repeat this test with the AA set to all ONEs.

Repeat with the remaining twenty-three different transponder addresses each consisting of 23 ZEROs and a single ONE

DRAFT © 2007 RTCA, Inc.

2.4.2.12.2 Variable Direct Data (§2.2.13.1.2)

Equipment Required:

Mode S Transponder Test Set.
ATC Test Set (T-50-3A/4A, or equivalent).
Wide Band Dual Channel Oscilloscope (HP 1710B, or equivalent).

Step 1 Pressure Altitude (ATCRBS) [§2.2.13.1.2.a (l)]

Connect the equipment as shown in Figure 2-26. Interrogate the transponder with a standard ATCRBS Mode C interrogation. With the ALT switch on, set altitude code inputs to the transponder, which should result in setting each of the altitude bits in the reply one at a time. Verify proper positioning of these bits in the reply. Verify that only the framing pulses are present in the reply when the ALT switch is set to "off."

Step 2 4096 Identification Code (ATCRBS) (§2.2.13.1.2.b)

With equipment connected as in Step l, interrogate the transponder with a standard ATCRBS Mode A interrogation. Set identification codes which should result in the setting of each of the identification reply bits one at a time. Verify proper positioning of these bits in the reply.

Step 3 Pressure Altitude (Mode S) [§2.2.13.1.2.a (2)]

Connect the transponder RF port to the Mode S test set. Interrogate the transponder with a standard surveillance-altitude interrogation (UF=4) with the PC, RR, DI and SD fields set to ZERO and the address the same as that provided to the transponder. With the ALT switch on, provide altitude code inputs to the transponder which should result in setting each of the ac field bits (including the M bit or the Q bit if the transponder is equipped to report altitude in 25-foot increments) of the reply one at a time. Verify that the correct bits are transmitted in the ac field of the reply. Verify that the ac field is all ZEROs when the ALT switch is set to "off."

Step 4 Identification Code (Mode S) (§2.2.13.1.2.b)

With the equipment connected as in Step 3, interrogate the transponder with a standard surveillance-identity interrogation (UF=5) with PC, RR, DI and SD fields set to ZERO and the address the same as that provided to the transponder. Using the identity codes specified in Step 2, verify that the proper bit patterns exist in the ID field of the reply.

Step 5 Flight Status and Vertical Status (§2.2.13.1.2.c)

Interrogate with UF=0 and UF=16 and verify that the VS field is a ONE when the "on-the-ground port" of the transponder is set to the on-the-ground condition. Also, verify that the VS field is a ZERO otherwise.

Interrogate with formats UF=4, 5, 20, 21 and verify that the transponder follows the protocol of §2.2.14.4.14, and Figure 2-13.

DRAFT © 2007 RTCA, Inc.

Step 6 Aircraft Identification Data (§2.2.13.1.2.e)

If the transponder inputs aircraft identification data as variable data, the following test applies. Interrogate the transponder with a short surveillance-altitude (UF=4) with PC, DI and SD fields set to 0 and the RR field set to 18. Set the aircraft identification input to the transponder to 'LLLLLLLL' and verify that the encoded aircraft identification data is correctly transmitted in the MB field (MB Bits 9-56 = 001100001100 ...) of the transponder's reply. Repeat with an aircraft identification input of '33333333' and verify that the encoded aircraft identification data is correctly transmitted in the MB field (MB Bits 9-56 = 110011110011 ...) of the transponder's reply.

2.4.2.12.3 Standard Transaction Interfaces (§2.2.13.3)

Equipment Required:

Mode S Transponder Test Set.
Means of Inserting and Extracting Data at Transponder Interface Ports.
Means of Timing Transactions.

Measurement Procedures:

With the transponder RF port connected to the RF port of the Mode S Transponder Test Set, perform the following test sequences.

Step 1 Uplink Interface Information Content (§2.2.13.3.1 a and e)

Interrogate the transponder with valid Mode S interrogations of all uplink formats which the transponder is designed to accept, including broadcast interrogations. Verify that all fields (possibly excluding AP) of the interrogations are passed correctly through the transponder and except for UF=0, 11, 16, and 24 (when it is a request for a downlink ELM), appear at the uplink interface. Make additional valid interrogations with the uplink formats (excluding UF=11 and UF=24) and field content randomly chosen. Verify proper output of the uplink interface. Verify that broadcast interrogations are identified as such, either by AP content or by a special purpose code.

Step 2 Uplink Interface, "No-Storage Design" (§2.2.13.3.1.b)

Interrogate the transponder with valid Mode S interrogations of all uplink formats which the transponder is designed to accept. Verify that all data appear correctly at the uplink interface prior to the start of the transponder reply.

Step 3 Uplink Interface, "Storage Design" Acceptance Rate (§2.2.13.3.1.c)

Interrogate the transponder with valid Mode S interrogations (both short and long) at the rates and time periods specified in §2.2.3.4.2. Verify that all data appear correctly at the uplink interface.

Step 4 Uplink Interface, Nonacceptance (§2.2.13.3.1.d)

Interrogate the transponder with valid long Mode S interrogations at a rate exceeding the one specified in §2.2.3.4.2 for the longest time period. Verify that the transponder does not accept interrogations after the rate for which the

DRAFT © 2007 RTCA, Inc.

transponder is designed. Also, verify that all data correctly appear at the uplink interface for all accepted interrogations.

Step 5 Downlink Interface, Information Content (§2.2.13.3.2.a)

Insert an all ONEs input. Interrogate the transponder with all uplink formats that it is designed to accept (one interrogation of each format, RR=16 for long interrogations). Verify that all bits in the transponder replies, not set by transponder protocol requirements, are ONE. Verify that all fields in the replies, set by transponder protocol, have the correct value.

Repeat this procedure with MB field data context 55 5555 5555 5555.

Step 6 Downlink Interface, "No-Storage Design" (§2.2.13.3.2.b)

Insert an all ONEs input. Interrogate the transponder with a standard Comm-A, altitude interrogation. Verify that data are inserted into the transponder at the proper time, and that the transponder reply contains the proper data.

Step 7 Downlink Interface, "Storage Design" Buffer Rate, Buffer Function (§2.2.13.3.2.c)

Set up a sequence of Comm-B replies with the value of the last 48 bits of MB of each reply set to the number of the reply in the sequence (e.g., MB=1 for first reply). Interrogate the transponder with a standard Comm-A, altitude interrogation at the rates specified for long interrogations in §2.2.3.4. Verify that the replies include the proper data in the MB field. Repeat with RR equal to all valid codes from 16 through 18.

Step 8 Downlink Interface, Unavailable Data (§2.2.13.3.2.e)

Disconnect all inputs from the transponder's downlink interface port. Interrogate the transponder with a standard Comm-A, altitude interrogation containing RR=16. Verify that the reply contains all ZEROs in the MB field. Repeat with all RR codes from 17 through 31, noting that:

- For RR code 17, bits of the MB field of the reply excluding bits 1-8, 24, 26-32, 33 and 35 are set to ZEROs (bits 1-8, 24, 26-32, 33 and 35 are or may eventually be set by the transponder itself when no interface is availble).

- For RR code 18, the reply contains all ZEROs excluding bits 1 – 8, in the MB field if the aircraft identification consists of variable direct data, or the tail number if the aircraft identification consists of fixed direct data.

- For RR code 19, bits 9-56 of the MB field of the reply are set to ZEROs.

2.4.2.12.4 ELM Service Interfaces (§2.2.20.1.4 and §2.2.20.1.2)

Equipment Required:

Mode S Transponder Test Set.
Transponder ELM Data Link Device.

DRAFT © 2007 RTCA, Inc.

Measurement Procedure:

Connect the transponder RF port to the RF port of the Mode S transponder test set. Connect the Mode S transponder test set of the ELM data link device to the ELM interface port of the transponder and perform the following sequences.

Step 1 ELM Uplink Interface, Data Rate (§2.2.20.1.4)

Interrogate the transponder with four 16-segment uplink ELMs (each segment having unique coding, interrogations spaced 50 microseconds apart, and a new 16-segment ELM starting 5 milliseconds after the previous ELM). After 4 seconds for transponders equipped for standard ELM operation or after 1 second for transponders equipped for enhanced uplink ELM operation, interrogate the transponder with another set of four 16-segment ELMs. Verify that the correct data appears at the ELM interface no later than one second after completion of the corresponding uplink ELM for both interrogation sequences. Verify that the interface reports an interrogator identity code of ZERO.

Step 2 ELM Uplink Interface, Interrogator Identification (§2.2.20.1.2)

Repeat the procedures of Step 1 using the multisite protocol. Use different Interrogator Identifier codes and verify that they are correctly reported at the interface.

Step 3 ELM Downlink Interface, Data Rate (§2.2.20.2.4 and §2.2.3.5)

Set up a downlink ELM which conforms to the maximum capability of the transponder (each segment with unique coding) on the Mode S transponder test set or ELM data link device. Interrogate the transponder with a Comm-C (UF=24) with RC=3 and SRS="all ONEs." Verify that all segments are properly transmitted 136 ±1 microseconds apart.

2.4.2.12.5 Interface Integrity Testing (§2.2.13.2.2)

Compliance with this requirement **shall** be demonstrated either by direct test in a simulated operational environment or by analysis based on the known characteristics of proven interface techniques.

2.4.2.12.6 Comm-B Downlink Interface, Message Cancellation (§2.2.20.2.2)

Step 1 Cancellation Before Transmission

Insert a Comm-B message into the downlink interface for transmission. Interrogate the transponder with UF=4, 5, 20 and 21 and verify that the DR code in its replies is set to 1. Cancel the message via the interface, interrogate again and verify that the DR code is now not 1.

Step 2 Cancellation After Transmission

Insert message as in Step 1, interrogate and extract message as in §2.2.19.1.12.4, using RR=16. Cancel message via the interface, interrogate again to verify that that DR is now not 1.

DRAFT © 2007 RTCA, Inc.

Step 3 Cancellation in Multisite Environment

Prepare two messages of differing content, m1 and m2, for insertion into the interface. Insert m1 as in Step 1 and extract using the multisite protocol (RR=16, DI=1, IIS>0, MBS=1). Cancel m1 via the interface and verify that DR is not 1 and that the UM field does not show a Comm-B reservation. After that verification, and within less than 15 seconds, insert m2 into the interface and extract using the multisite protocol with different IIS. Verify that the second message has been extracted and close out the transaction using DI=1, IIS as for m2, MBS=2 (see §2.2.19.2.3.3). Verify that DR is not 1 and that the UM field does not show a Comm-B reservation.

Note: *This two-message sequence is needed to verify that a complete cancellation has been achieved by way of the interface.*

Step 4 Cancellation Within a Queue

If the interface is designed to store more than one message in the transponder, where one message is ready to be transmitted and other messages are queued for subsequent transmission, the following test must be performed.

Insert the maximum number of messages into the transponder and cancel one of the messages that is not scheduled for immediate transmission. Extract all messages and verify that the cancelled message does not appear. Repeat for each possible message location in the queue.

2.4.2.12.7 Downlink ELM Interface, Message Cancellation (§2.2.20.2.2)

Step 1 Cancellation Before Transmission

Insert an ELM message occupying as many segments as the transponder will permit into the downlink interface for transmission. Interrogate the transponder with UF=4, 5, 20 and 21 and verify that the DR code in its replies is larger than 16 and reflects the number of inserted segments correctly. Cancel the message via the interface, interrogate again, and verify that the DR code is now not larger than 16.

Step 2 Cancellation After Transmission

Insert message as in Step 1, interrogate and extract message as in §2.2.20.2.1.1.2, using RC=3. Cancel message via the interface, interrogate again to verify that DR is now not larger than 16.

2.5 Test Procedures for the Surveillance and Communications Protocols

2.5.1 Introduction

This subsection includes tests to verify the transponder's processing functions. (The tests described in Subsection 2.4 verify transponder performance as a receiver and transmitter of signals.) The nature of these processing tests is such that some means of automatically controlling, sequencing and evaluating the tests is necessary if the tests are to be practical. It is assumed that an automatic capability is available for executing these tests.

DRAFT © 2007 RTCA, Inc.

The only exception is a technique for manual testing of Mode S parity, which is included as a simple procedure for verifying the proper implementation of the parity codes.

Transponder States:

Upon receipt of an interrogation, the action of a Mode S transponder is dependent upon the interrogation type and format, and the "state" of the transponder at the time of receipt. The address of the interrogation must be correct, the format must be one the transponder is equipped to receive, and the reply format requested must be within the capability of the transponder. If all of the above criteria are met, and if the transponder is not locked out to the interrogator identity, the interrogation will be accepted. The content of the reply will depend not only on the content of the interrogation but also on control inputs to the transponder, such as Alert and SPI, and on data existing at the transponder interfaces such as the altitude code and waiting messages.

The overall state of a Level 1 transponder is determined by the status of 19 timers: Suppression, Lockout, Alert, SPI, and 15 selective lockout timers.

Data link transponders have additional possible states defined by data link reservation timers and the condition of link protocol status registers.

A Level 1 transponder could receive $2^{56} \approx 7x10^{16}$ different interrogation patterns, of which about 33 million must be accepted because they are of the correct address and format. Of these, about 200 require that a correct reply, as specified in Subsection §2.2 of this document, be returned. The corresponding numbers for data link transponders are proportionally larger.

Certain interrogation patterns are illogical and should never be transmitted by an interrogator. It is also physically impossible for certain combinations of timer and register conditions to occur simultaneously in a correctly functioning transponder. However, if any illogical interrogation pattern is inadvertently transmitted, the transponder must not respond inappropriately or transition to an improper state. Thus, tests are included to subject the transponder to specific illogical interrogation patterns to verify that it reacts as specified in Subsection §2.2.

Logic Tests:

Many of the specifications of Subsection §2.2 involve "sufficient condition" logic. That is, taken in the context of the entire document, the statement “On receipt of PC=1 the transponder **shall** be locked out," means: "If and only if PC=1, the transponder **shall** be locked out." The tests then must verify that PC=1 causes the lockout state, and also that other signals (some of which may include other messages in the same location used for the PC field) do not cause this state.

Exhaustive tests would have to combine all possible interrogation patterns with all possible transponder states; verify that the transponder takes the specified action for specified combinations of interrogation patterns and transponder states; and verify that it takes no action for all other combinations.

The number of possible state-pattern combinations makes it impossible to perform exhaustive tests within a reasonable time period. A practical test procedure separates required tests into two categories: Positive tests and negative tests.

DRAFT © 2007 RTCA, Inc.

Positive tests verify that the transponder acts as required by the specifications in Subsection §2.2 and the accompanying flowcharts. For example, PC=1 received in the correct format must cause lockout for the specified time.

Negative tests verify that the transponder does not react to unspecified codes or patterns. For example PC=1 must not cause lockout.

The positive tests included are exhaustive in the sense that every action specified in Subsection §2.2 is tested. Negative tests have been chosen according to the seriousness of a possible malfunction. For example, negative tests of the lockout protocol are important because a malfunction can make the transponder invisible to a sensor. Thus, all PC codes are tested.

Tests for Data Flow:

Data flow must also be verified. However, totally exhaustive testing of data flow is not practical. Tests for data flow cannot be clearly classified as positive or negative. They are designed such that all connections between input and transponder action are verified. The procedures are intended to identify the most probable failure modes.

Accuracy of data transfer by the transponder in either direction is verified by these tests. That is, message patterns entering must be identical with message patterns leaving the transponder.

Scope of Tests:

The tests will verify that the functions required by the text in Subsection §2.2 are carried out regardless of the design approach.

2.5.2 Required Test Equipment

The test equipment described here is required for all procedures except Procedure #1.

2.5.2.1 Automatic Test Controller

The controller **shall** be capable of sequencing the test procedures and analyzing the content of the transponder's responses. Program instructions for the controller must be generated by the user according to the procedures of §2.5.4 and the instructions of §2.5.3.b.

2.5.2.2 Signal Generator

The signal generator **shall**:

a. Generate nominal (§2.1.11.3 and §2.1.11.4) waveforms for ATCRBS and Mode S interrogations.

b. Be capable of a continuous interrogation rate of 50/sec (Some tests for a TCAS-compatible transponder require 60/sec.).

c. Be capable of a peak interrogation rate of 2500/sec (§2.2.3.4.2).

DRAFT © 2007 RTCA, Inc.

d. Have a parity generator (§2.2.18.2.1.c and Figure 2-9).

e. Have means to accept control commands for:

(l) The type of interrogations to be made (ATCRBS A, C; ATCRBS/Mode S All-Call; ATCRBS-Only All-Call; Mode S formats).

(2) The value (ONE or ZERO) for each bit in a Mode S interrogation, excluding the bits in the AP field.

(3) The value (ONE or ZERO) for each bit of the Mode S address.

(4) The timing of the interrogation.

f. Generate interrogation signal levels of -60 and 0 dBm.

2.5.2.3 Reply Receiver

The reply receiver **shall**:

a. Accept all ATCRBS replies and pass on their content to the controller.

b. Accept all Mode S replies, carry out the decoding function for AP or PI (Figure 2-10), and pass on the reply content and the decoded address or the interrogator identity to the controller.

2.5.2.4 Interface Adapter

The interface adapter **shall** be able to transfer information content between all applicable interfaces and the controller in either direction.

Some tests require the use of equipment that simulates certain functions of a TCAS unit. The simulation equipment should enable the transponder to send and receive data on the TCAS/transponder interface using appropriate interface protocols and response times appropriate for an actual TCAS operating with the TCAS/transponder interface. The simulation equipment should allow specific bit configurations to be sent to the transponder and allow for information received from the transponder to be examined.

Note: *Interface designs are not standardized, and therefore can range from one universal interface to several separate interfaces for direct and indirect data. Interfaces for some functions (4096, SPI, etc.) may not be electrically accessible and would thus require manual setting.*

DRAFT © 2007 RTCA, Inc.

2.5.3 Selection and Use of the Test Procedures

a. Selection

Given the range of possible transponder designs and capabilities, the test procedures of §2.5.4 must be chosen to match the transponder. Test procedures are included for:

Transponder	Reference	Procedures
Minimum Data Link Transponder	§2.2.19.1	2 to 23&29, excluding 18A
Data Link ELM-C Transponder	§2.2.20.1.1	2 to 25&29, excluding 18A
Data Link ELM-C/D Transponder	§2.2.20.2.1	2 to 29, excluding 18A
Enhanced Data Link Transponder	§2.2.21	2 to 29, excluding 18
TCAS Compatible Transponder	§2.2.22	30 to 39

The Error Protection Test (Procedure #1) is used to verify the correct operation of the error protection circuitry of the test equipment and the transponder. Its initial application is recommended.

b. Use

The test procedures in §2.5.4 constitute a detailed set of program instructions for the test controller.

The procedures describe a set of interrogation sequences and replies that must be carried out to verify one specific operation, protocol or action of the transponder. The number of required transactions (interrogation-reply pairs) may vary depending on the transponder design (for example, for diversity transponders, all tests must be applied to both channels) and the details of the controller instructions. The number of verifications is fixed for each transponder design.

Since each procedure sequence tests only one specific transponder action, it is possible to combine transactions such that more than one transponder action is tested. For example, while interrogation-reply protocols are being verified, the content of the interrogations can also be checked to verify reply content.

It is not required that the described sequences follow consecutively. Transactions of one sequence may be used to bring the transponder into a state required for another sequence. Other tests may be executed while waiting for timer runout.

The transponder is required to reply to at least 99% of valid interrogations in the Mode S format and to at least 90% in the ATCRBS format. Reinterrogation capability must be provided for instances of non-reply. Given the large number of transactions carried out during these tests, a valid reason for rejection would be a reply failure rate, cumulatively recorded, that exceeds the specified rate.

DRAFT © 2007 RTCA, Inc.

2.5.4 Test Procedures

2.5.4.1 Procedure #1 Error Protection

(§2.2.18.2.1.c)

The correct function of the two coding-parity processes in the transponder can be automatically verified by a hardware circuit in the test generator, designed according to Figure 2-10. The test set (signal generator/analyzer) carries out the correct encoding process. A transponder will recognize the correct address and will in turn correctly generate the AP and PI fields.

It is also possible to observe the function of the transponder's and test set's error protection circuits if the AP pattern resulting from known text and address is known. However, since the correct values of 24 bits must be verified from an oscilloscope presentation, the deciphering of the phase reversals in the uplink P_6 or the relative pulse positions in the downlink becomes laborious.

Patterns for the AP field exist that are easily distinguished in an oscilloscope presentation. Combinations of text (the bit stream before the AP or PI fields) and address exist for which AP and PI consist of all ZEROs or of another easily recognizable and verifiable pattern. They are presented here.

Equipment Required:

Test set capable of generating Mode S interrogations at a 0-dBm power level.

DPSK modulation detector (a simple diode detector is adequate for manual determination of the location of phase reversals in a 0-dBm signal).

Wide-band oscilloscope (HP1710B, or equivalent).

Verification of Transponder's Downlink Encoding Circuit for PI

At the transponder's address setting interface, set addresses shown in the following list, depending on the internal CA report:

If CA=0, set AA to 03 13 D4 hex.
If CA=4, set AA to 03 2B E2 hex.
If CA=5, set AA to FC DF EB hex.
If CA=6, set AA to 03 37 F9 hex.
If CA=7, set AA to FC C3 F0 hex.

Interrogate with the ATCRBS/Mode S All-Call and verify that in the reply PI is all ZEROs.

Note: *This test verifies the transponder's downlink encoder without relying on the correct operation of the Mode S test set.*

Verification of Test Set Error Protection Circuits

Connect the diode detector and oscilloscope to the RF output of the test set and generate a signal strong enough to register on the oscilloscope. Synchronize with the test set

DRAFT © 2007 RTCA, Inc.

interrogation rate and observe the shape of the resulting P_6 pulse. The phase transitions within P_6 will cause amplitude modulation that can be easily observed. The following combinations of texts and interrogation addresses AA will result in AP as shown:

UF=4, all fields = 0, AA = CO 51 F6 hex : AP = all ZEROs.
UF=4, all fields = 0, AA = 3F AB F2 hex : AP = AA AA AA hex.
UF=20, all fields = 0, AA = AC C5 55 hex : AP = all ZEROs.
UF=20, all fields = 0, AA = 53 3F 51 hex : AP = AA AA AA hex.

Verification of Transponder's Downlink Encoding Circuits for AP

Couple the modulation detector into the RF connection between the test set and transponder so that the transponder's reply waveform can be observed. Interrogate the transponder so that the following reply formats are generated and observe the reply pulses on the oscilloscope:

DF=5, all fields = 0, AA = 2078CE hex : AP = all ZEROs.
DF=5, all fields = 0, AA = 752D9B hex : AP = 55 5555 hex.
DF=21, all fields = 0, AA = 0B154F hex : AP = all ZEROs.
DF=21, all fields = 0, AA = 5E 401A hex : AP = 55 5555 hex.

2.5.4.2 Procedure #2 Interrogation Acceptance Test

(§2.2.18.2.2 – acceptance, Level 1 transponder)
(Figure 2-11 – flowchart, Level 1 transponder)
(§2.2.18.2.3 – coordination, Level 1 transponder)
(§2.2.18.2.2 – acceptance, minimum data link transponder)
(Figure 2-16 – flowchart, all data link transponders)
(§2.2.19.1.4 – coordination, minimum data link transponder)
(§2.2.20.1.1 – coordination, ELM)

Interrogation-Reply Coordination, ATCRBS and ATCRBS/Mode S All-Call

Interrogate transponder with:

ATCRBS Mode A.
ATCRBS Mode C.
ATCRBS Mode A/Mode S All-Call.
ATCRBS Mode C/Mode S All-Call.
ATCRBS Mode A-Only All-Call.
ATCRBS Mode C-Only All-Call.

Repeat all the above and include the P_2 suppression pulse.

Verify: Proper reply and reply format or no reply, as required.

Interrogation-Reply Coordination, Mode S Formats (P_6-Formats)

Interrogate transponder with all Mode S formats: UF=0 to UF=24.

DRAFT © 2007 RTCA, Inc.

For UF=0, 16 use both RL codes 0 and 1.
For UF=4, 5, 20, 21 use all RR codes 0 through 31.
For UF=24, use RC=2 in order to get a reply. For UF=11, use interrogation address FF FFFF hex.
For all other interrogations, use the interrogation address to which the transponder has been set.

Verify: Proper reply and reply format as required for this transponder design.

Proper non-reply to unspecified formats and uplink formats for which the transponder is not equipped.

Proper non-reply if the transponder design cannot generate the reply format demanded by RR or RL.

Non-acceptance conditions not covered in this test are verified elsewhere as follows:

Buffers full – §2.5.4.15
Wrong Address – §2.5.4.9
Broadcast but short format – §2.5.4.16
Lockout – §2.5.4.3 and §2.5.4.4
PR function, stochastic – §2.5.4.5

2.5.4.3 Procedure #3 CA Verification

(§2.2.14.4.6)

A separate test sequence is not required.

Verification must be made during the interrogation acceptance test (§2.5.4.2) and whenever a squitter is encountered.

CA=7 is verified for cases with the following transponder settings: DR not ZERO, DR=0 and FS=2, DR=0 and FS=3, DR=0 and FS=4, DR=0 and FS=5.

2.5.4.4 Procedure #4 Non-Selective Lockout Tests

(§2.2.18.2.4)

Non-selective lockout is initiated on receipt of a correctly addressed interrogation UF=4, 5, 20, 21 containing PC=1 or LOS=1 together with IIS=0. This starts the T_D timer which holds the lockout condition for 18 ±1.0 seconds.

Non-selective Lockout applies to both (8 and 21 microseconds) ATCRBS/Mode S All-Calls and to UF=11 with IC and CL=0.

The lockout state is verified by interrogating with the locked-out All-Call types and by observing that a reply is not generated.

DRAFT © 2007 RTCA, Inc.

The lockout duration is verified by interrogation with the locked-out All-Call types 100 milliseconds before the earliest permissible timer runout and by observing that a reply is not generated.

The lockout termination is verified by interrogation with the locked-out All-Call types 100 milliseconds after the latest permissible timer runout and by observing that a reply is generated.

The timer restart feature is verified by transmitting a second lockout command while the lockout is still in effect and by observing that lockout termination occurs after the latest permissible timer runout reckoned from the last lockout command.

Negative tests verify that interrogation patterns not specifically designated as lockout commands do not cause a lockout condition in the transponder, and that lockout affects only the specified formats.

2.5.4.4.1 Positive Tests

Interrogate with UF=4, PC=1.

Verify: Lockout state, lockout duration, lockout termination.

Repeat with UF=5, PC=1 for Level 1 transponder. Repeat with UF=5, UF=20, UF=21 and PC=1 for all other designs.

Repeat, using LOS=1 with IIS=0 as the lockout command.

Recommended Test Sequence:

Item	Time (sec)	Action
A	0	Interrogate with UF=4, PC=1.
B	0.02	Verify lockout with ATCRBS Mode A/Mode S.
C	0.04	Verify lockout with ATCRBS Mode C/Mode S.
D	0.06	Verify lockout with UF=11, PR=0, IC=0, CL=0.
E	16.9	Repeat items B, C, D.
F	19.1	Verify termination with All-Call.
G	19.12	Verify termination with ATCRBS Mode C/Mode S.
H	19.14	Verify termination with UF=11, PR=0, IC=0, CL=0.
I	21.0	Interrogate with UF=5, PC=1.
J	21.02	Verify as in items B, C, D.
K	26.0	Interrogate with UF=20, PC=1.
L	26.02	Verify as in items B, C, D.
M	31.0	Interrogate with UF=21, PC=1.
N	31.02	Verify as in items B, C, D.
O	41.9	Verify as in items B, C, D.
P	46.9	Verify as in items B, C, D.
Q	50.1	Verify termination as in items F, G, H.

Note: *This sequence must be modified for Level 1 transponders, because they do not accept long interrogations.*

DRAFT © 2007 RTCA, Inc.

2.5.4.4.2 Required Negative Tests

a. PC Discrimination

The interrogation patterns are:

UF	=	4, 5, 20, 21.
PC	=	0 and DI≠3,
PC	=	0 and DI=3 and LSS=1 and SIS=0,
PC	=	1 and DI=3,
PC	=	2, 3, 4, 5, 6. 7.

Total number of patterns = 36.

With the transponder not in non-selective lockout state, interrogate with all of the above patterns consecutively. Verify that, after the sequence, the non-selective lockout state does not exist.

b. Broadcast Discrimination

The interrogation patterns are:

UF	=	4, 5, 20, 21.
PC	=	0, 1, 2, 3, 4, 5, 6, 7.
IIS	=	0
LOS	=	1

Address = Broadcast (FF FFFF hex).
Total number of patterns = 32.

With the transponder not in non-selective lockout state, interrogate with all patterns consecutively. Verify that, after the sequence, the non-selective lockout state does not exist.

c. Address Discrimination

The interrogation patterns are:

UF	=	4, 5, 20, 21.
PC	=	1.

Address: not for this transponder.
Total number of patterns = 4.

With the transponder not in non-selective lockout state, interrogate with all of the above patterns. Verify that, after the sequence, the non-selective lockout state does not exist.

DRAFT © 2007 RTCA, Inc.

d. II and SI Discrimination

The interrogation patterns are:

UF = 11.
PR = 0.
CL = 0 through 1, with IC = 1 through 15
CL = 2 through 4, with IC = 0 through 15.

Total number of patterns = 78.

With the transponder in non-selective lockout state, interrogate with all of the above patterns and verify that the corresponding II or SI code is not locked out.

e. All-Call Discrimination

This test verifies that the lockout state applies only to All-Call formats and not to ATCRBS or discrete interrogations. The interrogation patterns are:

All non-All-Call formats for which the transponder is designed (Procedure #2 – §2.5.4.2).

With the transponder in non-selective lockout state, interrogate with all of the above patterns and verify that they are not locked out.

2.5.4.5 Procedure #5 Selective Lockout Tests

(§2.2.18.2.5)

Selective lockout is initiated on receipt of a correctly addressed interrogation UF=4, 5, 20, or 21 containing DI=1, 7; LOS=1 and IIS from 1 to 15, or DI=3, LSS=1 and SIS from 1 to 63. This starts the T_L timer associated with the received II or SI code and holds the lockout condition for 18 ±1.0 seconds.

Selective lockout applies only to UF=11 with II or SI corresponding to the running T_L timer.

The lockout state, duration, termination and restart are defined and tested as described in §2.5.4.4. Negative tests follow the same procedures and have the same purpose as described in §2.5.4.4.

DRAFT © 2007 RTCA, Inc.

Pattern Definition for Level 1 Transponders

Positive Interrogation Patterns Per Timer

UF: 2 codes.
DI: 2 codes with LOS=1 or 1 code with LSS=1. Total: 4 patterns for II timers, 2 patterns for SI timers starting lockout.

Total Interrogation Patterns Per Timer

UF: 2 codes.
DI: 2 codes with LOS=0,1; 1 code with LSS=0, 1
5 codes with SD field bits 23 & 26 = 1
Total: 20 possible patterns for II timers, 18 possible patterns for SI timers.

Positive test patterns: 2 or 4.
Negative test patterns: 16.

Pattern Definition of All Other Transponder Designs

Positive Interrogation Patterns Per Timer

UF: 4 codes.
DI: 2 codes with LOS=1 or 1 code with LSS=1.
Total: 8 patterns for II timers, or 4 patterns for SI timers starting lockout.

Total Interrogation Patterns Per Timer

UF: 4 codes.
DI: 2 codes with LOS= 0,1; 1 code with LSS=0,1;
5 codes with SD field bits 23 & 26 = 1
Total: 40 possible patterns for II timers, 36 possible patterns for SI timers.

Positive test patterns: 4 or 8.
Negative test pattern: 32.

Note: *The 8 negative test patterns per UF code are as follows: For each value of DI (0 – 7) set the IIS or SIS code correctly. For DI code values where there is no IIS or SIS subfield within the SD field, set the corresponding bits (bits 17-20 for IIS or 17-22 for SIS). If DI=1 or 7, set LOS=0, for all other values of DI, set bit 26=1. If DI=3, set LSS=0, for all other values of DI, set bit 23=1.*

Test Sequence

Because 78 timers, each running 18 ±1.0 seconds, are involved, a test sequence is shown here that minimizes the time needed, while providing a comprehensive validation of transponder performance.

DRAFT © 2007 RTCA, Inc.

Principle of Test Sequence

A lockout timer is started by a surveillance or Comm-A interrogation and with the next interrogation, the lockout state is verified for UF=11 with the corresponding II or SI. Just before the earliest and just after the latest timer runout duration, lockout and non-lockout state is verified.

Timer intervals must be interlaced to verify their independence and to save time.

The requirement that each timer can be restarted while running must also be verified.

Test #1 Multisite, T_L Timer and Lockout: Timer Duration and Insensitivity to Non-Valid Signals (All Transponders)

Time (sec)	Action
0.0	Start timer with UF=4.
0.02	Verify lockout to timer's II or SI with UF=11.
0.04 to 1.62	Verify non-lockout to all other non-locked out IIS and SIS (times 0.9 and 1.1 will be used for the last 2 steps of the sequence for timers started previously with interlace, see *note* below).
2.0	Start next timer for interlace.
3.64	Try timer restart with correct IIS or SIS and incorrect DI-LOS and DI-LSS combinations (DI:0 – 7 = 8 combinations) (see *note* above).
16.9	Verify lockout to timer's II or SI with UF=11.
19.1	Verify non-lockout.

If the last test fails, the timer either runs too long or has been restarted by a non-valid signal.

Note: *Test #1 provides the basic timing of a test sequence that satisfies the principles of the test procedure while maintaining a maximum of 50 interrogations per second. Because the test sequence calls for interlacing multisite lockout timers (in this case one is started every 2 seconds), the above sequence will need to accommodate the critical timer verifications that occur at 16.9 and 19.1 seconds relative to the start of each timer. When the test sequence reaches 16.9 and 19.1 seconds after the start of each timer it will be 0.9 and 1.1 after the start of a new timer. Priority is given to verify the lockout of the earlier timer at the correct time, while the verification of non-lockout to all other timers is scheduled around these critical measurements.*

DRAFT © 2007 RTCA, Inc.

Test #2 Multisite T_L Timer and Lockout: Restart Capability and Sensitivity to All Valid Formats (All Transponder)

Time (sec)	Action
0.0	Start timer with UF=4.
0.02	Verify lockout to timer's II or SI.
4.5	Restart timer with UF=5.
21.4	Verify lockout for timer's II or SI.
23.6	Verify non-lockout for timer's II or SI.

Interlace all timers in approximately 0.3-second intervals.

For Level 2 transponders and above, alternate using UF=4 and UF=20 interrogations to start the timers, and alternate using UF=5 and UF=21 interrogations to restart timers.

If the test at 21.4 seconds fails, the timer has not been restarted.

2.5.4.6 Procedure #6 Squitter Verification

(Subparagraph §2.2.18.2.6)

The squitter function of the transponder **shall** be tested to verify that the transponder correctly generates squitters at the proper rate and with the proper content. Squitters will occur randomly throughout operation of all test procedures. Squitters should be noted by the reply receiver and the test controller as unsolicited replies. Provisions should be made in the test setup to detect squitters, both acquisition and Extended Squitters, and verify their content and rate. If a squitter is detected during the operation of any of the test procedures in this document, the procedure should delay the next scheduled interrogation so that it doesn't overlap the squitter and go undetected by the transponder. The following subparagraphs contain test procedures and expected results that vary according to the aircraft installation for which the transponder is designed, those that support automatic detection of on-the-ground status and those that do not. If a transponder design allows either installation type, the test procedure should be conducted with the transponder switched to support automatic on-the-ground detection and repeated with the transponder switched for installation without automatic on-the-ground detection. If the transponder implements a manual switch to the pilots as per §2.1.7.b to disable the transponder from replying to ATCRBS, ATCRBS/Mode S All Call and Mode S-only All Call interrogations, verify for the following tests that this switch has no effect to Acquisition and Extended Squitter transmissions. Verify that the switch has no effect to CA coding and Extended Squitter format selection.

2.5.4.6.1 Acquisition Squitter Verification

The following test **shall** verify proper transmission of Acquisition squitters when the transponder is not transmitting Extended Squitters. The following tests **shall** be conducted with no external data input to the Extended Squitter GICB registers.

Step 1: Setup the transponder to airborne status. The Acquisition squitter transmission **shall** be verified to be uniformly distributed between 0.8 and 1.2 seconds with a time quantization less than or equal to 15 milliseconds. The test setup will

DRAFT © 2007 RTCA, Inc.

require measuring the time difference between successive Acquisition squitters. The time interval measured between successive Acquisition squitters **shall** be counted in individual 15 millisecond bins between 0.8 and 1.2 seconds. Validation of the proper quantization is achieved upon receipt of at least one Acquisition squitter in each 15 millisecond time bin between 0.8 and 1.2 seconds. Improper times are those occurring outside of the time bins between 0.8 and 1.2 seconds. Verify that the Acquisition squitters are uniformly distributed over the interval between 0.8 and 1.2 seconds.

Step 2: Verify the content of the CA, AA and PI fields. For diversity transponders, verify that the squitters occur alternately from both channels. For transponders that are designed for aircraft installations with automatic means of determining on-the-ground condition, when the transponder is in on-the-ground status, verify that Acquisition squitters occur on the top antenna only at the prescribed rate.

2.5.4.6.2 Extended Squitter Verification

Extended squitters occur randomly at rates determined by internal states of the transponder. Each Extended Squitter type must be separately verified for content, rate and antenna selection which are dependent upon transponder air/ground state and Extended Squitter ground station interrogations. The selection of airborne or surface position formats are dependent upon determination of on-the-ground status and ground station control via interrogation content. The following tests **shall** be performed to verify proper operation of the transponder Extended Squitter functions. The external data sources for Extended Squitter loading **shall** be connected via the appropriate interfaces.

2.5.4.6.2.1 Extended Squitter Rate Verification

Extended squitter transmission rate **shall** be verified to be uniformly distributed as specified for each Extended Squitter type in §2.2.23.3. The time quantization for each Extended Squitter type **shall** also be verified to be less than or equal to 15 milliseconds. The test setup will require measuring the time difference between successive Extended Squitters of the same type. The time interval measured between successive Extended Squitters of the same type **shall** be counted in individual 15 millisecond bins between the minimum and maximum interval specified in §2.2.23.3. Validation of the proper quantization is achieved upon receipt of at least one Extended Squitter in each 15 millisecond time bin in the time interval specified. Improper times are those occurring outside of the time bins within the specified time interval. Verify that the Extended Squitters are uniformly distributed over the specified time interval. Verify the content of the CA, AA and PI fields. For diversity transponders, setup the transponder to transmit airborne format Extended Squitters. Verify that each Extended Squitter type identified in §2.2.23.1.2 occur alternately from both channels. For transponders that are designed for aircraft installations with automatic means of determining on-the-ground condition, set the transponder to on-the-ground status and verify that Extended Squitters occur on the top antenna only at the prescribed rates.

2.5.4.6.2.2 Extended Squitter Protocol Verification

The following test verifies the transponder properly transmits Extended Squitters according to the protocol specified in §2.2.23.1.

DRAFT © 2007 RTCA, Inc.

Verify the content of the CA, AA and PI fields of all Extended Squitter replies. For the following test, connect the transponder to the appropriate source that provides altitude code input to the transponder. Also, as required, setup to provide Extended Squitter data to ground initiated Comm-B registers 05 {HEX}, 06{HEX}, 07 {HEX}, 08 {HEX}, 09 {HEX} and 0A {HEX} through an external interface as specified in §2.2.13.2.

Unless otherwise noted, for the following steps, setup the transponder to not inhibit Acquisition squitters and to report barometric pressure altitude in the airborne position report (subfield ATS equals ZERO). For transponders that support automatic detection of air/ground state, setup the transponder to airborne state.

Step 1 Disable altitude code and all other Extended Squitter data into the transponder. Set the ALT switch to the "off" position. Upon power-up initialization of the transponder, verify that the transponder broadcasts Acquisition squitters but does not broadcast Extended Squitters. Interrogate the transponder with ground initiated Comm-B requests with RR=16, DI=7 and RRS=5, 6, 7 and 9 respectively. Verify that the MB field of the corresponding replies are ZERO. Set the ALT switch to the "on" position. Verify that the transponder continues to broadcast Acquisition squitters but does not broadcast Extended Squitters.

Step 2 Set the ALT switch to the "on" position and provide altitude code input to the transponder. After power-up initialization, verify that the transponder does not broadcast Extended Squitters. Interrogate the transponder with ground initiated Comm-B requests with RR=16, DI=7 and RRS=5, 6, 9 and 10 respectively. Verify that the altitude is ZERO in the airborne position report and remaining bits are ZERO. Verify that the MB field of the remaining replies are ZERO. Interrogate the transponder with UF=4, RR=17 and DI≠7 and verify that the SCS subfield of the data link capability report is ZERO. Verify that the transponder broadcasts Acquisition squitters.

Step 3 Provide Extended Squitter updates to the transponder at a one half second rate. Include updates to GICB registers 5, 6, 7, 8 and 9. Use other than ZERO or all ONEs for the airborne position report, aircraft identification report, and the airborne velocity report. Verify that the transponder broadcasts airborne position squitters, airborne identification squitters and airborne velocity squitters at the proper rate and the ME data content matches the data stored in GICB register 5, 8 and 9, respectively. Verify that the SSS and ACS subfields of the airborne position squitter are correct. Interrogate the transponder with ground initiated Comm-B requests with RR=16, DI=7 and RRS=5, 6, 7, 8 and 9, respectively. Verify that the MB field contains the proper data. Repeat except vary the data content of each GICB and verify the data content of each Extended Squitter subsequent to each register update. Interrogate the transponder with RR=17 and DI≠7 and verify that the SCS subfield of the data link capability report is one.

Step 4 Setup the transponder as in step 3 with Extended Squitter updates to the transponder at a one half second rate. Place the transponder in the airborne state. Stop updates of all Extended Squitter data, except altitude information, to the transponder for GICB registers 05, 06, 07, 08 and 09. Verify that after 2 seconds, all subsequent Extended Squitter ME fields (GICB registers 07 and 09) are ZERO with the exception of the ACS field in the airborne position squitter (GICB register 05) and the airborne identification squitter (GICB register 08). Place the transponder in the ground state and verify that the surface position Extended Squitter ME field (GICB register 06) is ZERO. Repeat the setup as in

DRAFT © 2007 RTCA, Inc.

step 3 with Extended Squitter updates to the transponder at a one half second rate. Place the transponder in the airborne state. Interrogate the transponder with RR=17 and DI=7 and verify that the SCS subfield of the data link capability report is one. After all updates (except altitude information) have ceased for 10 seconds, interrogate to extract the data link capability report and verify that the SCS subfield is ZERO. Interrogate the transponder with ground initiated Comm-B requests with RR=16, DI=7 and RRS=5, 6, 7, 8 and 9 respectively. Verify that the MB fields are ZERO with the exception of the ACS field in the airborne position squitter (GICB register 05) and the airborne identification squitter (GICB register 08). After all updates (except altitude information) have ceased for 60 seconds, verify that airborne identification and airborne velocity Extended Squitters are no longer transmitted. Place the transponder in the ground state and verify that the surface position Extended Squitter (GICB register 06) is no longer transmitted. Return the transponder to the airborne state. Verify that the acquisition squitter and airborne position squitter are broadcast. Set the ALT switch to the "off" position. Verify that the ME field of the airborne position squitter is ZERO. After 60 seconds, verify that the transponder no longer broadcasts airborne position squitters.

Step 5 Setup the transponder as in step 3 and provide Extended Squitter updates to the transponder at a one half second rate. Stop update of GICB registers 5 and 6 only. After 2 seconds, verify that the ME field of the airborne position squitter is ZERO with the exception of the ACS subfield. Verify that the transponder broadcasts airborne position, aircraft identification and airborne velocity squitters at the proper rate and the ME data content matches the data stored in GICB registers 5, 8 and 9, respectively. Interrogate with RR=16, DI=7 and RRS=5, 6, 8 and 9 and verify the MB fields matches the ME field in the corresponding Extended Squitter reply. After 10 seconds, interrogate to extract the data link capability report and verify that SCS is ZERO. After 60 seconds, verify that airborne position squitters are still transmitted.

Set the ALT switch to the “off” position. Verify that the ME field of the airborne position squitter is ZERO. After 60 seconds, verify that the transponder no longer broadcasts airborne position squitters. Verify that aircraft identification and airborne velocity squitters are transmitted throughout the test at the proper rate and with the correct data content.

Step 6 Set the ALT switch to the “on” position and provide altitude code input to the transponder. Provide Extended Squitter updates to the transponder at a one half second rate. Include updates to GICB registers 5, 6, 7, 8 and 9. Verify that the ME fields of the airborne position, velocity and aircraft identification squitters match the data input. Stop updates of Extended Squitter data to the transponder for GICB registers 8 and 9 only. After 2 seconds, verify that the ME field of the airborne velocity squitter is ZERO. Interrogate with RR=16, DI=7 and RRS=5, 6, 8 and 9 and verify that the MB fields match the ME fields in the corresponding Extended Squitter reply. After 10 seconds, interrogate to extract the data link capability report and verify that SCS is one. After 60 seconds, verify that airborne position reports are still transmitted and that aircraft identification and airborne velocity squitters are not transmitted.

Step 7 Configure the transponder to inhibit Acquisition squitters when Extended Squitters are broadcast. Prior to providing Extended Squitter updates, verify that Acquisition squitters are broadcast. Provide Extended Squitter updates at a one half second rate to GICB registers 5, 6 and 8 and provide altitude code input to

DRAFT © 2007 RTCA, Inc.

the transponder. Verify that Extended Squitters are broadcast and Acquisition squitters are not broadcast. Verify that airborne position and aircraft identification squitters are broadcast at the proper rate and alternately on the top and bottom antenna ports as specified for airborne state if antenna diversity is supported. Additionally provide updates to GICB register 9. Verify the broadcast of airborne position squitters, aircraft identification squitters and airborne velocity squitters at the proper rate and the ME data content matches the data stored in GICB registers 5, 8 and 9, respectively. Verify that the transponder does not broadcast Acquisition squitters.

Set the ALT switch to the "off" position and stop update to GICB registers 5, 6, 8 and 9. After 2 seconds, verify that the ME fields of the airborne position and airborne velocity squitters are ZERO. Interrogate with UF=4, RR=16, DI=7 and RRS=5, 6, 8 and 9, respectively. Verify that the MB fields of the replies match the data of the corresponding Extended Squitter reply. After 60 seconds, verify that Extended Squitter transmissions stop and the transponder resumes Acquisition squitter broadcast.

Repeat above sequence except stop update to GICB registers 5 and 6 only. After 2 seconds, verify that the ME field of the airborne position report is ZERO. After 60 seconds, verify that the transponder no longer broadcasts airborne position squitters and continues to broadcast airborne velocity and aircraft identification squitters. Verify that the transponder continues to inhibit the broadcast of Acquisition squitters.

Repeat above except stop update to GICB register 9 only. Again, verify that after 2 seconds the ME field of the airborne velocity squitter is ZERO and after 60 seconds, both airborne velocity and Acquisition squitters are not transmitted.

Step 8 Input GICB register 0A {HEX} and verify that an event-driven Extended Squitter is generated with the proper data content. Update GICB register 0A{HEX]}at a rate less than twice every second. Verify that an event-driven Extended Squitter is generated subsequent to each update with the proper data content. Vary the data content provided externally to the transponder and verify that the data content subsequent to update of the event-driven report is correct. Increase the update rate to exceed twice per second. Verify that the event-driven squitter rate does not exceed twice per second and that the data content reflects the most recent update contents.

For the following steps, for those transponders that support automatic detection of on-the-ground status, change the transponder to on-the-ground status. Configure the transponder to not inhibit Acquisition squitters when Extended Squitters are broadcast.

Step 9 Upon power-up initialization of the transponder, verify that the transponder broadcasts Acquisition squitters at the proper rate but does not broadcast Extended Squitters. For transponders that support automatic detection of on-the-ground status and diversity, verify that Acquisition squitters occur on the top antenna port only. Interrogate the transponder with GICB requests with RR=16, DI=7 and RRS=5, 6, 8 and 9 respectively. Verify that the MB field of the corresponding replies are ZERO.

DRAFT © 2007 RTCA, Inc.

Step 10 Provide Extended Squitter updates to the transponder at a half second rate. Include updates to GICB registers 5, 6, 8 and 9. Use other than ZERO or all ONEs for the surface position report and the aircraft identification report. Set TRS to ZERO. For transponders that support automatic on-the-ground detection, perform the following:

1. Verify that the transponder broadcasts surface position squitters at the high rate and the ME data content matches the data stored in GICB register 6.

2. Verify that the transponder broadcasts aircraft identification squitters and occur uniformly over the range of 4.8 to 5.2 seconds as specified in §2.2.23.1.3.d. Verify that the ME data content matches the data stored in GICB register 8.

3. Verify that the transponder does not broadcast the airborne position and the airborne velocity squitter.

4. Verify that the transponder does not broadcast Acquisition squitters.

5. Stop update of GICB registers 5, 6, 8 and 9. After 2 seconds, verify that the surface position squitter ME field is ZERO. After 60 seconds, verify that surface position and aircraft identification squitters stop and Acquisition squitters resume.

For transponders that do not support automatic on-the-ground detection, verify that airborne position squitters, airborne velocity squitters and aircraft identification squitters are transmitted at the proper rate and data content. Verify that surface position squitters are not emitted. Verify that the transponder broadcasts Acquisition squitters at the proper rate.

Repeat except vary the data content of GICB registers 6 and 8 and verify the data content of each Extended Squitter subsequent to each register update.

Step 11 For transponders that support automatic on-the-ground detection and can determine surface squitter rate, repeat step 10 with TRS set to 1 and verify that the surface position and aircraft identification squitters occur at the high rate. Change TRS to 2 and repeat except verify that the surface position squitter switches to the low rate and aircraft identification squitters occur uniformly over the range 9.8 to 10.2 seconds as specified in §2.2.23.1.3.d.

In all of the above steps, interrogate the transponder with a ground-initiated Comm-B request containing RR=16, DI=7 and RRS=7 and verify that the TRS and ATS subfields are reported properly.

2.5.4.6.3 Squitter Control Verification

Squitter operation is dependent upon control from Extended Squitter ground stations from interrogation content of the SD field. SD data can command the transponder to broadcast surface position squitters and control surface Extended Squitter rate and surface squitter antenna selection.

DRAFT © 2007 RTCA, Inc.

Step 1 Squitter Type Control

Provide pressure altitude data and Extended Squitter updates to the transponder through the appropriate external interface. Include updates to GICB registers 5, 6, 8 and 9. Use other than ZERO or all ones for the corresponding GICB registers. Update the registers at a half second rate to prevent time out of these registers. Set TRS to ZERO and for those transponders that support automatic on-the-ground detection, set the transponder to airborne state. Throughout the following step, verify that CA remains equal to 5 for transponders that support automatic on-the-ground detection; otherwise verify CA remains equal to 6. Verify that the transponder continues broadcast of Acquisition squitters throughout the test.

Interrogate the transponder with UF=4, PC and RR=0, DI=2, TCS=1, RCS=2, SAS=0. Verify that the transponder broadcasts surface position and aircraft identification squitters for 15 seconds at the low rate and does not broadcast airborne position squitters. Verify that after the 15 second interval the transponder reverts to broadcast of the airborne position squitter and resumes broadcast of the aircraft identification squitter at the high rate. Repeat using an interrogation as above except set TCS=2 and verify that the transponder broadcasts surface position and aircraft identification squitters at the low rate for 60 seconds. After the 60 second interval, verify that the transponder reverts to broadcast of airborne position squitters and resumes broadcast of aircraft identification squitters at the high rate.

Interrogate the transponder with UF=4, PC and RR=0, DI=2, TCS=1, RCS=2, SAS=0. Verify that the transponder broadcasts surface position and aircraft identification squitters for 15 seconds at the low rate and does not broadcast airborne position squitters. Prior to the timeout of the 15 second interval, repeat interrogation. Verify that the transponder continues broadcast of the surface position squitter for another 15 seconds from the second interrogation. Repeat using an interrogation as above except set TCS=2 and verify that the transponder broadcasts surface position squitters at the low rate for 60 seconds and prior to the timeout of the 60 second interval, repeat interrogation. Verify that the surface position squitters continue for another 60 seconds from the second interrogation.

Repeat first interrogation and within 1 second interval, interrogate with same interrogation except set TCS=3. Verify that the transponder stops broadcast of the surface position squitter and resumes broadcast of the airborne position squitter. Verify that aircraft identification squitters are broadcast at the high rate. Interrogate the transponder with UF=4, PC and RR=0, DI=2, TCS=0, RCS=0, SAS=0. Verify that the transponder continues to broadcast airborne position squitters at the proper rate. Repeat last interrogation with TCS=3, 4, 5, 6, 7 and verify that the transponder correctly broadcasts airborne Extended Squitters at the proper rate and does not broadcast surface position Extended Squitters.

Perform the following for transponders that support automatic on-the-ground detection. Set the transponder to on-the-ground status. Set TRS to ZERO. Interrogate the transponder with UF=4, PC and RR=0, DI=2, TCS=1, RCS=2, SAS=0. Verify that the transponder broadcasts surface position and aircraft identification squitters for 15 seconds at the low rate. Verify that the transponder resumes broadcast of the surface position squitter after the 15-second interval.

DRAFT © 2007 RTCA, Inc.

Verify that the surface position and aircraft identification squitters occur at the high rate. Repeat using an interrogation as above and after one second, switch the transponder to airborne state. Verify that the transponder broadcasts surface position squitters at the low rate for the full 15-second interval. After the 15 seconds, verify that the transponder broadcasts airborne position squitters at the proper rate.

Step 2 Squitter Rate Control

With the equipment connected as specified in Step 1, set TRS to ZERO and for transponders that support automatic on-the-ground detection, set the transponder to airborne state. Except as otherwise noted, verify that the Acquisition squitter is broadcast throughout the following step at the proper rate.

Interrogate the transponder with UF=4, PC and RR=0, DI=2, TCS=2, RCS=1 and SAS=0. Verify that the transponder broadcasts surface position squitters for 60 seconds at the high rate and does not broadcast airborne position squitters. Verify that after the 60-second interval the transponder reverts to broadcast of the airborne position squitter.

Repeat above procedure except prior to the 60 second interval, repeat the interrogation with TCS=2 and RCS=1 and verify that the transponder continues to transmit surface position squitters another 60 seconds after which the transponder reverts to airborne position squitter transmission. Interrogate the transponder with UF=4, PC and RR=0, DI=2, TCS=0, RCS=1 and SAS=0. Verify that the transponder continues to broadcast airborne position squitters at the proper rate. Repeat last interrogation with TCS=3-7 and verify that the transponder correctly continues to broadcasts airborne position squitters at the proper rate after each interrogation.

Interrogate the transponder with UF=4, PC and RR=0, DI=2, TCS=1, RCS=2, SAS=0. Verify that the transponder broadcasts surface position squitters for 15 seconds at the low rate and does not broadcast airborne position squitters. Verify that aircraft identification squitters occur at the low rate. Verify that after the 15-second interval the transponder reverts to broadcast of the airborne position squitter at the high rate and aircraft identification squitters occur uniformly over the range 4.8 to 5.2 seconds as specified in §2.2.23.1.3.d. Repeat using an interrogation as above except set TCS=2. Verify that the transponder broadcasts surface position squitters at the low rate for 60 seconds and reverts to airborne position squitters after the 60-second interval. Also, verify that aircraft identification squitters occur uniformly over the range 9.8 to 10.2 seconds for the 60-second interval and resumes broadcast at the high rate after the 60-second interval.

Interrogate the transponder with UF=4, PC and RR=0, DI=2, TCS=1, RCS=1, SAS=0. Follow this interrogation within 1 second with the same interrogation except set TCS=0 and RCS=3. Verify that the transponder stops broadcast of surface squitters (surface position and aircraft identification squitters) and after 15 seconds resumes broadcast of the airborne position squitter. Repeat the first interrogation and this time follow within 1 second with TCS=0 and RCS=4. Verify that the transponder again stops broadcast of surface squitters and after 15 seconds resumes broadcast of the airborne position squitter.

DRAFT © 2007 RTCA, Inc.

The following verifies that the RCS subfield has no effect when the transponder is not transmitting surface position squitters. Interrogate the transponder with UF=4, PC and RR=0, DI=2, TCS=0, RCS=1, SAS=0. Verify that the transponder continues the broadcast of the airborne position and aircraft identification squitters at the proper rates. Repeat above except set RCS=2, 3, 4, 5, 6 and 7, respectively and verify that the transponder continues broadcast of the airborne position and aircraft identification squitters at the proper rates following each interrogation.

The following verifies that unassigned RCS codes have no effect when the transponder is transmitting surface position squitters. Interrogate the transponder with UF=4, PC and RR=0, DI=2, TCS=2, RCS=0, SAS=0. Verify that the transponder broadcasts surface squitters at the proper rates. Repeat the interrogation except set TCS=0 and RCS=5, 6 and 7, respectively and verify that the transponder continues broadcast of surface position squitters at the proper rate following each interrogation.

Interrogate the transponder with UF=4, PC and RR=0, DI=2, TCS=2, RCS=1, SAS=0. Follow this interrogation within 1 second with the same interrogation except set TCS=0 and RCS=3. Verify that the transponder stops broadcast of surface squitters. Prior to 60 seconds from the first interrogation, repeat the first interrogation except set RCS=0. Verify that the transponder resumes broadcast of the surface position squitter after 60 seconds from the second interrogation.

Interrogate the transponder with UF=4, PC and RR =0, DI=2, TCS=2, RCS=1, SAS=0 to again set the transponder to transmit surface position squitters. Follow this interrogation after 30 seconds with the same interrogation except set TCS=0 and RCS=4. Verify that the transponder stops broadcast of surface squitters. Repeat the first interrogation with RCS=0 within 60 seconds of the first interrogation to prevent timeout of the surface position squitter format and repeat 60 seconds later. After 120 seconds from the second interrogation, verify that the transponder resumes broadcast of the surface position squitter.

Interrogate the transponder with UF=4, PC and RR=0, DI=2, TCS=2, RCS=1, SAS=0. Follow this interrogation within 1 second with the same interrogation except set TCS=0 and RCS=3. Verify that the transponder stops broadcast of surface squitters. Prior to 60 seconds from the first interrogation, repeat the first interrogation. Verify that the transponder immediately resumes broadcast of the surface position squitter at the high rate for 60 seconds.

Perform the following for transponders that support automatic on-the-ground detection. Set TRS to ZERO and set the transponder to on-the-ground status. Verify that Acquisition squitters are not broadcast. Interrogate the transponder with UF=4, PC and RR=0, DI=2, TCS=0, RCS=3 and SAS=0. Verify that the transponder stops broadcast of surface squitters for 60 seconds and Acquisition squitters are broadcast. After 60 seconds, verify that the transponder resumes broadcast of surface squitters at the high rate and stops transmission of Acquisition squitters. Repeat interrogation except set RCS=4. Verify that the transponder stops broadcast of surface squitters and broadcasts Acquisition squitters for 120 seconds. After 120 seconds, verify that Acquisition squitters are no longer broadcast and the transponder resumes broadcast of surface squitters at the high rate. Repeat interrogation as above except set RCS=0, 5, 6 and 7

DRAFT © 2007 RTCA, Inc.

delaying 120 seconds between interrogations. Verify that the transponder correctly continues broadcasting surface position squitters at the high rate.

Step 3 Squitter Antenna Control

The following procedure verifies that the transponder correctly broadcasts surface Extended Squitters and Acquisition squitters on the proper antenna ports as commanded by the SAS subfield. For transponders that do not support antenna diversity, verify that the SAS commands have no impact on Acquisition or Extended Squitter transmissions.

With the equipment connected as specified in Step 1, set TRS to ZERO and for transponders that support automatic on-the-ground detection, set the transponder to on-the-ground status. For transponders that support automatic detection of on-the-ground condition, verify that the transponder broadcasts surface Extended Squitters on the top antenna only and. Verify that the transponder does not broadcast Acquisition squitters.

Interrogate the transponder with UF=4, PC and RR=0, DI=2, TCS=0, RCS=0, SAS=0. For transponders that do not support automatic detection of on-the-ground status, verify that the following interrogations have no impact to Extended Squitter and Acquisition squitter transmissions. Otherwise, verify that the transponder broadcasts extended and Acquisition squitters on the top antenna only. Repeat interrogation except set SAS=1. Verify that each Extended Squitter type and Acquisition squitters occur alternately on the top and bottom antennas. After 120 seconds, verify that the transponder broadcasts extended and Acquisition squitters from the top antenna only. Repeat interrogation except set SAS=2. Verify that the transponder broadcasts extended and Acquisition squitters for 120 seconds from the bottom antenna only. After the 120-second interval, verify that the transponder resumes broadcasting extended and Acquisition squitters from the top antenna only. Repeat interrogation except with SAS=1 followed by an interrogation 10 seconds later with SAS=3. After the second interrogation, verify that the transponder resumes broadcasting extended and Acquisition squitters from the top antenna only.

Repeat above procedure for transponders that support automatic on-the-ground detection except set the transponder to airborne state and verify that the SAS commands have no effect on Acquisition and Extended Squitter transmissions and squitters are broadcast alternately on top and bottom antenna ports.

Repeat above procedure except command the transponder to report surface Extended Squitters via UF=4, PC and RR=0, DI=2, TCS=2, RCS=0 interrogations every 60 seconds to maintain surface squitter transmissions. Setup transponders that support automatic on-the-ground detection to airborne state. Verify that the SAS command properly controls antenna port selection for each Extended Squitter types as specified for each SAS value and that the SAS commands have no effect on Acquisition squitter transmissions.

2.5.4.7 Procedure #7 FS and VS Protocol/Code Tests

The following procedure verifies the FS, VS and SSS protocol and verifies proper coding. The FS and SSS codes are dependent upon Alert conditions input to the transponder. The FS, VS and also the CA codes are dependent upon the automatically

DRAFT © 2007 RTCA, Inc.

determined on-the-ground condition input to the transponder for installations so equipped.

If a manual switch is provided to the pilots as per §2.1.7.b to disable the transponder from replying to ATCRBS, ATCRBS/Mode S All Call, and Mode S-only All Call interrogations, verify that this switch has no effect to the on-the-ground status determination of the aircraft for the following tests.

(§2.2.14.4.14 – FS code).
(§2.2.14.4.42 – VS code).
(§2.2.23.1.8 – SSS code).
(§2.2.13.1.2.c, §2.2.18.2.7 – protocol).
(§2.2.18.2.11 – interface).
(Figure 2-13 – Flowchart).

This procedure verifies the proper operation of the FS and VS protocols and codes.

Transponder States

A = Alert Register set.
B = T_C timer runs = 16 states, independent.
C = T_L timer runs.
D = Ground Register set.

Interrogation Patterns for the Level 1 Transponder

UF=4, 5 with RR=0 = 3 patterns.
UF=0.

Interrogation Patterns for All Other Transponders

UF=4, 5, 20, 21 with RR=0 and 16 through 31.
UF=0, 16 = 70 patterns.

Transaction Summary

Level 1 Transponder:	48 transactions.
All Other Transponders:	1120 transactions.

Required Code Verification Test

Observe that the FS code follows the transponder states as specified in §2.2.14.4.14 and verify that VS=1, if and only if the "on-the-ground" input is active.

Note: *The Alert Register is set when the manual or interface input to the ID function is 7500, 7600, 7700.*

The T_C timer is started when the input to the ID function is changed.

The T_I timer is started when manual or interface input exists for SPI momentarily.

The Ground Register is set when input to the "on-the-ground" interface indicates that condition.

The transactions required for this test can be interlaced during the procedures required for interface verification or during any other convenient interval. This can be arranged so that no time is lost in waiting for the timers to run out.

DRAFT © 2007 RTCA, Inc.

Required Timer Duration Test

Duration of each timer run (T_C and T_I) must be verified to be 18 ±1.0 seconds by observation of FS code change.

On-the-Ground Validation Test

For transponders that support automatic on-the-ground condition input and either implement Extended Squitter formatting or support the on-the-ground validation requirements of §2.2.18.2.7.c, the following test **shall** be performed.

The on-the-ground input is used in determining the codes for FS, VS and CA fields. The requirements of Section §2.2.18.2.7.c utilize radio altitude, ground speed and airspeed inputs to validate the on-the-ground status when indicated by the input to the transponder. If the conditions for overriding the on-the-ground status indicated by the input to the transponder, the airborne status **shall** be utilized to select FS, VS and CA field coding. Also, for extender squitter format selection, airborne formats **shall** be transmitted unless overridden by ground station interrogation commands. CA field validation for Acquisition squitters and Extended Squitters is verified as part of Procedure #6 in §2.5.4.6, so the following test can be incorporated as part of that testing.

Setup the transponder to indicate on-the-ground status by input to the transponder. With no input of radio altitude, airspeed and ground speed to the transponder, verify that the FS codes are determined by the transponder states above with the Ground Register set to on-the-ground and VS is set to 1. Input radio altitude, airspeed and ground speed to the transponder. Since not all aircraft installations may have access to all three inputs, testing is required for all combinations of inputs being provided to the transponder so that each input is tested individually and collectively. This is to insure that any one input reporting a value that sets airborne status as specified in §2.2.18.2.7.c, properly outputs FS values according to Figure 2-13 with the Ground Register reset to NOT indicate on-the-ground condition and VS is ZERO. If all inputs are supported by the transponder, a total of 27 combinations are required. This represents 9 cases with radio altitude not input, 9 cases with a value above 50 feet and 9 cases with a value below or equal to 50 feet. The same variation for airspeed and ground speed is required except the values selected would be above 100 knots to satisfy the requirement to reset the Ground Register to NOT indicate on-the-ground condition and a value at 100 knots or below to not modify the on-the-ground status.

SSS Code Validation Test

The SSS subfield is contained in the ME field of airborne Extended Squitters. Setup the transponder to transmit airborne Extended Squitters at the nominal rates. Verify the following:

1) SSS=0 when no alert (the Alert Register is clear and T_C timer is not running) and no SPI condition is active.

2) SSS=1 when Alert Register is set and no SPI Condition is active.

3) SSS=2 when the T_C timer is running and returns to ZERO after the temporary alert has cleared after 18 ±1 seconds.

4) SSS=3 when the T_I timer is set indicating a SPI Condition is active and returns to ZERO after the T_I timer expires.

DRAFT © 2007 RTCA, Inc.

5) SSS=1 when Alert Register is set and SPI Condition is active. Clear the alert Register during the T_I timer running and verify that SSS=3 until the T_I timer expires.

6) SSS=2 when the T_C timer is running and the T_I timer is running. Start the T_C timer followed by the T_I timer. Verify that SSS equals 3 upon expiration of the T_C timer and returns to ZERO upon T_I timer expiration.

7) SSS=3 when the T_I timer is started. Prior to expiration of the T_I timer, start the T_C timer and verify that SSS equals 2. Upon expiration of the T_C timer, verify that SSS returns to ZERO.

8) SSS=3 when the T_I timer is started. Set the Alert Register while the T_I timer is running and verify that SSS equals 1.

2.5.4.8 Procedure #8 PI (Parity/Identity) Verification

(§2.2.18.2.9)

This test procedure verifies the PI field generation.

A separate test sequence is not required.

Required Verification:

During the lockout tests, the transponder generates replies to All-Call interrogations and the reply receiver receives the PI field and extracts the II or SI code received by the transponder in the preceding interrogation.

Verify that the extracted code agrees with the II or SI of the preceding All-Call.

Verify that the extracted code equals 0 if the preceding All-Call was an ATCRBS/Mode S type.

2.5.4.9 Procedure #9 Address Tests

(§2.2.18.2.2 – addressing discrimination)
(§2.2.13.1.1.a (1) – protection of Mode S address bits)
(§2.2.13.1.1.a (2) – address reporting)
(§2.2.13.1.1.a (3) and §2.2.18.2.1.c – address encoding)
(§2.2.18.2.11 – address interface)

This test procedure verifies that the address set into the address interface of the transponder is only accepted during power-up or unit reset, that the accepted address set is actually the address to which the transponder responds, and that the accepted address is the only address which the transponder reports in DF=11. It is also verified that this accepted address pattern is used in generating the AP field of replies and that the transponder does reply only to this address.

Test Sequence:

1. Remove power from the transponder under test.

DRAFT © 2007 RTCA, Inc.

2. Set the transponder address selector device to any valid Mode S address (not all 0's or all 1's), referred to as "address #1."
3. Apply power to the transponder under test and wait a minimum of 2 seconds.
4. Interrogate the transponder with address #1 and observe:

   Acceptance for all formats.
   Correct reporting of address # 1 in AA field of DF=11.
   Correct encoding of address # 1 in AP field of replies.

5. Interrogate the transponder with any Mode S address other than address #1 and observe:

   Non-acceptance of all formats.

6. Set the transponder address selector device to a different valid Mode S address, referred to as "address #2."
7. Verify correct reporting of address # 1 in AA field of DF=11.
8. If the transponder is designed to monitor the Mode S address, then:
9. Verify that the transponder generates an appropriate diagnostic error message to indicate that the transponder address has changed.

10. Interrogate the transponder with address #2 and observe:

    Non-acceptance of all formats.

11. Interrogate the transponder with address #1 and observe:

    Acceptance of all formats.
    Correct reporting of address # 1 in AA field of DF=11.
    Correct encoding of address # 1 in AP field of replies.

2.5.4.10 Procedure #10 Altitude Report Tests

(§2.2.13.1.2.a (l) – in ATCRBS)
(§2.2.13.1.2.a (2) – in Mode S)
(§2.2.18.2.11 – interface)

This test procedure verifies that the altitude code, as it is set into the interface, appears correctly in both ATCRBS and Mode S replies.

Transponder Designs

In ATCRBS replies only 11 of the possible 13 pulses are used; X and D1 are not part of the code. Additionally, some transponders may not need the capability to transmit the D2 and/or D4 pulses, which start at 62,000 and 30,750 feet respectively. At the other extreme, a transponder with the capability to report altitude in meters must have the capability to transmit ONEs in all 13 bits of the AC field.

Transponders report altitude in up to six reply formats depending on the implementation level: ATCRBS Mode C, DF=0, DF=4, (Level 1 and above) the airborne position squitter, DF=17 (Extended Squitter capability), and in DF=16, and DF=20 (Level 2 and above).

DRAFT © 2007 RTCA, Inc.

Test Sequence:

Step 1: No Barometric Altitude Data

Disconnect the interface input for altitude code or do not supply altitude information if the interface is common with other data systems. Interrogate so that all possible altitude reporting downlink formats are generated in replies. For ATCRBS, verify that only the bracket pulses appear and that bits 20 through 32 of Mode S replies are ZEROs. Setup the transponder to transmit airborne position squitters and verify that the altitude field is all ZEROs.

Connect the altitude source to the interface input, generate a code consisting of all ZEROs and verify as above. Repeat the test procedure while providing invalid data and verify that the AC field is set to all ZEROs.

Step 2: Barometric Altitude Data Available

With the altitude code source connected to the interface input, apply the Barometric Altitude Input_A values provided in Table 2.5.4.10. Verify that the altitude appears correctly in all reply formats containing an altitude code, and in the Mode S replies and Extended Squitter the "Q" bit and the "M" bit are set to ZERO (0).

Apply the Barometric Altitude Input_B values provided in Table 2.5.4.10. Verify that the altitude appears correctly in all reply formats containing an altitude code, and in the Mode S replies and Extended Squitter the "Q" bit is set to ONE (1) and the "M" bit is set to ZERO (0) for cases 1 through 7. Verify that the "Q" bit and the "M" bit are set to ZERO (0) for cases 8 through 10.

Table 2.5.4.10: Barometric Altitude Data Inputs

Case #	Altitude Input_A (100 foot increments)	Altitude Input_B (< 25 foot increments)
1	– 1,000	– 1,012
2	– 900	– 500
3	– 200	– 12.5
4	0	0
5	800	28,025
6	2,800	32,050
7	6,800	50,175
8	14,800	50,200
9	30,800	51,600
10	62,800	79,800

For aircraft installations that support shared interfaces and aircraft bus interfaces that provide multiple altitude data sources and types, perform the above test patterns and verify that the correct altitude source is selected. Apply all sources of altitude data that are available to the transponder and verify the following: 1) the proper pressure altitude input is selected the data is referenced to the standard pressure setting of 1013.25 hectopascals (uncorrected pressure altitude), 2) that if 25-foot or better pressure altitude sources are available, pressure altitude is reported in 25-foot increments. Verify that if 25 foot or

DRAFT © 2007 RTCA, Inc.

better pressure altitude sources are not connected or are not available, that 25-foot altitude is not reported.

Step 3: Data Provided in Metric, If Available

Repeat Step 2 with the input indicating metric input, if available, and verify that the "M" bit is set to 1 in the AC field of all replies.

2.5.4.11 Procedure #11 4096 Code Tests

(§2.2.13.1.2.b)
(§2.2.18.2.11 – interface, electrical)
(§2.1.7.a – interface, manual)

This test verifies that the 4096 code set by the pilot appears correctly in both ATCRBS and Mode S replies.

Procedure Selection:

For all installations and transponder designs, the initial input of the code is set manually by the pilot. The code selector device may or may not be an integral part of the transponder. If an electrical input exists, it may be dedicated to this function alone, or it may be common with other data systems. Any procedure selected ultimately must be traceable to the manual input mode, even if the pilot's selector device is provided by another manufacturer.

Pattern Selection:

The correlation between pulse position in ATCRBS and bit number in Mode S replies is shown in §2.2.13.1.2.b.

Only 12 of the possible 13 pulses or bit positions are used; X(26) is not part of the code. Test patterns are chosen so that the most likely failure modes (incorrect wiring in connectors, cables, code switches or register malfunction) are likely to be found. The following systematic test pattern generation is required:

There exist 66 code patterns consisting of two ONEs and 10 ZEROs, while another 66 patterns have two ZEROs and 10 ONEs. These 132 patterns are used for verification because they assure that a pair of connections is not defective. (A sequence of randomly chosen patterns is not suitable because there are many incorrect wiring possibilities and a random test can fail to detect errors).

The correlation between the required test pattern and the actual code numbers as seen by the pilot follows:

DRAFT © 2007 RTCA, Inc.

4096 Codes That Produce Two ONEs and 10 ZEROs

0003	0202	1400
0005	0204	2001
0006	0210	2002
0011	0220	2004
0012	0240	2010
0014	0300	2020
0021	0401	2040
0022	0402	2100
0024	0404	2200
0030	0410	2400
0041	0420	3000
0042	0440	4001
0044	0500	4002
0050	0600	4004
0060	1001	4010
0101	1002	4020
0102	1004	4040
0104	1010	4100
0110	1020	4200
0120	1040	4400
0140	1100	5000
0201	1200	6000

4096 Codes That Produce Two ZEROs and 10 ONEs

1777	6577	7576
2777	6677	7637
3377	6737	7657
3577	6757	7667
3677	6767	7673
3737	6773	7675
3757	6775	7676
3767	6776	7717
3773	7177	7727
3775	7277	7733
3776	7337	7735
4777	7357	7736
5377	7367	7747
5577	7373	7753
5677	7375	7755
5737	7376	7756
5757	7477	7763
5767	7537	7765
5773	7557	7766
5775	7567	7771
5776	7573	7772
6377	7575	7774

DRAFT © 2007 RTCA, Inc.

Transponder Designs:

The Level 1 transponder reports the 4096 code in ATCRBS Mode A replies and in DF=5; 264 replies must be verified.

All other transponders report the 4096 code in ATCRBS Mode A replies and in DF=5, 21; 396 replies must be verified.

Test Sequence:

Enter all test patterns manually or electrically and verify that they are correct in both ATCRBS and Mode S replies.

If the test patterns are entered electrically, a corresponding test procedure must be devised to verify the connection between 4096 codes and the electrical input to the transponder. This should include cables and connectors.

If the electrical input simulates an on-board data distribution system, the verification procedures for that system govern the above verification.

A manual insertion of the 4096 codes can be prompted by an interactive readout from the controller to speed the procedure.

2.5.4.12 Procedure #12 RI, Acquisition and Maximum Airspeed

(§2.2.13.1.1.b – insertion)
(§2.2.14.4.33 – code)
(§2.2.18.2.11 – interface)
(§2.2.22.1.5)

This test procedure verifies that the airspeed code as it is set at the fixed direct data interface appears correctly in replies and that it appears only when the interrogation shows AQ=1.

Pattern Selection:

Of the 4 bits of the RI field, one (14) is controlled by the content of the received interrogation. The remaining three (15 – 17) show the airspeed code from the fixed direct data interface when bit 14 is ONE, and input from a variable data interface when bit 14 is ZERO. This procedure concerns only the fixed data interface; RI action for the variable data interface is verified in Procedure #17.

To be verified are code 0 and codes 8 through 14 of §2.2.14.4.33.

Transponder Designs:

The airspeed codes range to 1200 knots. Bit 15, if ONE, characterizes all airspeeds above 300 knots. Transponders may not have inputs for airspeeds above that limit.

The Level 1 transponder requires interrogations with UF=0, AQ=0, 1 and RL=0 (2 interrogation patterns).

All other transponders require interrogations with UF=0, 16, AQ=0, 1 and RL=0, 1 (8 interrogation patterns).

DRAFT © 2007 RTCA, Inc.

Test Sequence:

For each airspeed code (for which the transponder is equipped), interrogate with the required number of patterns and verify that the RI field shows the code according to §2.2.14.4.33 or §2.2.22.1.5, as appropriate.

Note: *Since some transponders may enter the airspeed code through a common on-board data system, a corresponding test procedure must be used.*

2.5.4.13 Procedure #13 PR, Probability of Reply, Stochastic Acquisition

(§2.2.14.4.31 – PR code)
(§2.2.18.2.2.i – protocol)

This test procedure verifies that the probability-of-reply decision for All-Call interrogations is carried out correctly.

Principle of Test Procedure:

A large number of Mode S All-Call interrogations (UF=11) are made for each of the PR codes. For each PR code, a specified fraction of the interrogations will result in a reply. One hundred interrogations would provide a valid sample for active PR codes while a lesser number would be adequate for other codes.

Transponder Designs:

This test applies to all transponder designs.

Test Sequences:

a. Transponder Not Locked Out to All-Calls

Interrogate with UF=11 according to the summary below and verify the number of replies received as indicated:

DRAFT © 2007 RTCA, Inc.

Number of Interrogations	PR =	Replies	
		No Less Than	No More Than
100	0	99	100
100	1	35	65
100	2	18	32
100	3	9	15
100	4	4	8
20	5		0
20	6		0
20	7		0
100	8	99	100
100	9	35	65
100	10	18	32
100	11	9	15
100	12	4	8
20	13		0
20	14		0
20	15		0

b. Transponder Locked Out to All-Calls

The transponder can be in 79 different specific lockout states as determined by the running of the one T and the 78 T timers. The following test sequence must be repeated for each of the lockout states:

Interrogate so that the transponder is locked out non-selectively or selectively as required.

Interrogate with UF=11, containing II corresponding to the existing lockout state, and verify the number of replies according to the summary below:

Number of Interrogations	PR =	Replies	
		No Less Than	No More Than
20	0		0
20	1		0
20	2		0
23	3		0
20	4		0
20	5		0
20	6		0
20	7		0
100	8	99	100
100	9	35	65
100	10	18	32
100	11	9	15
100	12	4	8
20	13		0
20	14		0
20	15		0

DRAFT © 2007 RTCA, Inc.

Squitter Precaution

Because squitters, which have the same format, can distort the results of this test, precautions must be taken. Therefore, the test should be conducted during the 800-millisecond periods following squitter (§2.5.4.6).

Note: *It is not necessary that this test consist of an uninterrupted sequence of All-Calls. The interrogations can be dispersed throughout the overall test procedure whenever convenient.*

2.5.4.14 Procedure #14 Not Used

2.5.4.15 Procedure #15 Comm-A, Interface and Information Content

(§2.2.19.1.10 – protocol)
(§2.2.13.3.1.a – content)
(§2.2.13.3.1.b – no-storage design)
(§2.2.13.3.1.c – storage design)
(§2.2.13.3.1.d – non-acceptance)
(§2.2.3.4.2 – acceptance rate)
(§2.2.19.1.1.b – broadcast)

This procedure verifies that the information contained in Comm-A interrogations passes out of the transponder within the specified time interval and that such information correctly replicates the received transmission.

In this test, the equipment must monitor both the reply content via the reply received, and the uplink interface output via the interface adapter.

Interrogation Patterns:

UF	=	20, 21.
RR	=	0.
MA	=	3080 different patterns, half containing two ONEs, half containing two ZEROs.

Address: Use the broadcast address for 5% of the interrogations.

Total number of interrogations if UF=20 and UF=21 are alternated: 3080.

Test Sequence A:

Interrogate at the normal (50/sec) rate, alternating UF=20 with UF=21 inserting RR=0 to 15, PC=0 to 7, DI=0 to 7 and SD=random. Insert the 3080 different patterns into MA. Verify that the uplink content, as transmitted, appears at the interface in the same order as transmitted.

Note: *If the interface is of the storage design, the information may be delayed; coordination with the interface design is required.*

DRAFT © 2007 RTCA, Inc.

Test Subsequence:

Within the test sequence above, make 100 interrogations in 2.0 seconds. Schedule bursts and timing are as follows:

Start of Burst (ms)	Number of Interrogations	Interrogation Rate (per sec)
0	4	2500
80	4	2500
160	8	320
320	8	320
480	8	320
640	18	180
1000	4	2500
1080	4	2500
1160	8	320
1320	8	320
1480	8	320
1640	18	180

For the non-storage design, verify compliance with §2.2.13.3.1.b.

For the storage design, verify that within two seconds of this subsequence all uplink content appears in proper order as transmitted at the interface terminals.

Test Sequence B (Buffer Full)

Within one second, generate interrogation bursts as shown below. Use short replies to remain within the reply capability of the transponder.

Start of Burst (ms)	Number of Interrogations	Interrogation Rate (per sec)
0	4	2500
80	4	2500
160	8	320
320	8	320
480	8	320
640	18	180
750	16	180

Note: *This sequence is chosen so that the minimum data transfer rate of a storage type interface is exceeded.*

One second after the first burst, verify that the content of at least the first 50 interrogations has appeared at the interface and that the transponder has not generated a reply to those interrogations whose content has not appeared at the interface.

This test applies only if a storage design has been used.

DRAFT © 2007 RTCA, Inc.

2.5.4.16 Procedure #16 Broadcast Formats

(§2.2.19.1.1.b)

The broadcast function is verified as part of Procedure #15. A negative test must be conducted to verify that the broadcast function does not occur when short formats are used.

Patterns and Sequence:

Interrogate with UF=0, 4, 5 and a broadcast address. Verify that no information transfer occurs at uplink interfaces as a result of these interrogations.

2.5.4.17 Procedure #17 Downlink Interface, DFs 0, 16

(§2.2.13.3.1, a and b – interface)
(§2.2.19.1.16 – protocol)
(§2.2.14.4.26 – MV)
(§2.2.22.1.4)

This test procedure verifies that bit insertion into the first 32-bit positions of Mode S replies is possible and is carried out without disturbing established fields or protocols.

This test procedure also verifies that bit patterns inserted into the MV field of DF=16 are transmitted as inserted.

Transponder Design:

The downlink interface for DFs 0 and 16 can exist as a separate port or as one direction of a bidirectional un-buffered (real time) port. It can also exist as an interface accepting only the bit insertion for DF=0 (short reply).

All data link transponders use DF=0 and DF=16.

Note: *In TCAS installations, it is possible that a separate interface, according to §2.2.19.1.16, exists for UF=DF=0, 16. Such an interface may not be accessible if TCAS and transponder functions are integrated. In such circumstances, the test procedures for TCAS* ***shall*** *govern.*

Patterns for DF=0, 16

Unconditional Insertion

The locations are:

Bits 9, 10, ll: a total of 3 bits.

Interface patterns:

There are 8 possible unconditional interface patterns to be verified based on these 3 bits.

DRAFT © 2007 RTCA, Inc.

Interrogation patterns:

UF=0, RL=0, AQ=1, DS=0.
UF=16, RL=1, AQ=1.
UF=0, RL=1, AQ=1, DS any value other than 0.

Conditional Insertion

The locations are:

Bits 15, 16, 17: These can be inserted only if the interrogation contained AQ=0.

Interface patterns:

There are 8 possible conditional interface patterns to be verified based on these 3 bits.

Interrogation patterns:

UF=0, RL=0, AQ=0, DS=0.
UF=16, RL=1, AQ=0.
UF=0, RL=1, AQ=0, DS any value other than 0.

Note: *The interrogation that includes a DS value other than ZERO will test that the reply bits are not affected by TCAS Crosslink protocol. The data content inserted in the ground-initiated Comm-B registers being tested should be other than all zeroes or all ones.*

Positive Test Sequences for DF=0, 16

Unconditional Insertion

For each interrogation pattern, generate 8 interrogations while sequencing through all 8 possible interface patterns. Verify that the replies contain bits as inserted.

Conditional Insertion

For each interrogation pattern, generate 8 interrogations while sequencing through all 8 possible interface patterns. Verify that the replies contain bits as inserted.

Negative Test Sequence for DF=0, 16

Disconnect the interface input for the airspeed report or enter code 0 for airspeed. Insert ONEs for bits 14 through 17 at the downlink interface and interrogate with UF=0, RL=0, AQ=1 and with UF=16, RL=1, AQ=1.

Verify that bits 15 through 17 of the replies are ZEROs.

MV Test Sequence for All Data Link Transponders

This test sequence includes all unconditionally inserted bits in addition to the bit patterns of the MV field.

Interface Patterns and Test Sequence

Using bits 9 through 11 and 41 through 58, generate 420 interface patterns, 210 containing two ONEs and 210 containing two ZEROs.

DRAFT © 2007 RTCA, Inc.

Interrogate to extract replies of the inserted patterns and verify that they are transmitted as inserted. In the case of the interrogation with DS other than ZERO, verify that the MV field contains the data of the ground-initiated Comm-B register corresponding to the DS value in the interrogation.

Note: *The MV field will only contain the requested Comm B data if the transponder is TCAS Crosslink Capable and the requested register is supported by the transponder.*

2.5.4.18 Procedure #18 Comm-B Protocol

(§2.2.19.1.12 through §2.2.19.1.12.4)
(§2.2.19.2.2 through §2.2.19.2.3.1)
(§2.2.19.2.3.3 through §2.2.19.2.3.5)
(§2.2.19.2.1.2 – UM)
(Figure 2-19 – Flowchart)

This test procedure verifies that the Comm-B protocol is carried out correctly.

The test procedure follows the notation of transponder states and of interrogation patterns as shown in the flowchart.

Transponder States

The transponder states are defined by the combinations of conditions E through I, where:

E = B-register set: B-bit inserted.
F = T-register set: Message has been transmitted.
G = Timer runs: For multisite only.
H = IIS is correct (in next interrogation).
I = Next message waiting.

There are seven possible states as shown below:

#	E	F	G	H	I	
1	0	0	0	0	0	No B-bit, others impossible or inconsequential.
2	1	1	0	0	0	Message extraction, not multisite protocol.
3	1	1	0	0	1	As above, next message waiting.
4	1	1	1	0	0	In multisite, interrogation with wrong IIS can not close out.
5	1	1	1	0	1	As above with next message waiting.
6	1	1	1	1	0	In multisite, interrogation with correct IIS can close out.
7	1	1	1	1	1	As above, but after closeout B-bit will show again.

States 4 through 7 must be used with all 15 IIS codes.

DRAFT © 2007 RTCA, Inc.

Total: 4 x 15 + 3 = 63 transponder states to be used.

Interrogation Patterns

#	A	B	C	D	K	L	
1	0	0	0	0	0	0	Ordinary interrogation, asking for short reply.
2	0	0	0	0	0	1	Ground-initiated Comm-B extraction (FIS etc).
3	0	0	0	0	1	0	Air-initiated Comm-B extraction, not multisite.
4	0	1	0	0	0	0	Multisite, but not for Comm-B.
5	0	1	0	0	0	1	Ground-initiated Comm-B extraction, multisite not for Comm-B.
6	0	1	0	0	1	0	Air-initiated Comm-B extraction, multisite not for Comm-B.
7	0	1	0	1	0	0	Multisite closeout for Comm-B.
8	0	1	0	1	0	1	Multisite closeout for Comm-B and ground initiated Comm-B extraction.
9	0	1	0	1	1	0	Multisite closeout for Comm-B and attempt to extract a possible message still waiting at the air-initiation interface.
10	0	1	1	0	0	0	Multisite reservation with wrong RR, see next line.
11	0	1	1	0	0	1	Attempt at multisite reservation with wrong RR. Transponder must not accept reservation.
12	0	1	1	0	1	0	Multisite reservation, correct.
13	1	0	0	0	0	0	Non-selective cancellation.
14	1	0	0	0	0	1	Non-selective cancellation and ground initiated Comm-B extraction.
15	1	0	0	0	1	0	Non-selective cancellation and attempt to extract possible message still waiting at the air-initiation interface.
16	1	1	0	0	0	0	Non-selective cancellation, multisite not for Comm-B.

DRAFT © 2007 RTCA, Inc.

#	A	B	C	D	K	L	
17	1	1	0	0	0	1	Non-selective cancellation with ground initiated Comm-B extraction, multisite not for Comm-B.
18	1	1	0	0	1	0	Non-selective cancellation and attempt to extract possible message still waiting at air-initiation interface, multisite not for Comm-B.
19	1	1	0	1	0	0	Non-selective cancellation and multisite closeout, cancel non-selective message and close out multisite message if IIS is correct.
20	1	1	0	1	0	1	Non-selective cancellation and multisite close-out and ground-initiated Comm-B extraction. Will cancel non-selective message and will close out multisite message if IIS is correct. Will extract Comm-B.
21	1	1	0	1	1	0	Same as above, except with air-initiated extraction.
22	1	1	1	0	0	0	Non-selective cancellation and reservation with wrong RR. Cancel but make no reservation.
23	1	1	1	0	0	1	Non-selective cancellation and reservation with wrong RR. Cancel but make no reservation.
24	1	1	1	0	1	0	Non-selective cancellation and reservation. Cancel and make reservation.

A =	PC=4:	Cancellation
B =	DI=1:	Multisite in effect
C =	MBS=1:	Multisite reservation
D =	MBS=2	Multisite closeout
K =	RR=16 with DI ≠ 7 or with DI=7 and RRS=0	Air initiated MB extraction
L =	RR larger than 15 but not according to code K above	Ground MB extraction

The symbols A, B, C, etc., correspond to the symbols on the flowchart (Figure 2-19).

Interrogation patterns 4 through 12 and 16 through 24 of the 24 patterns shown are IIS-sensitive; each of them must be used with each of the 16 IIS codes.

Interrogation patterns 10, 11, 22, 23 are forbidden to the sensor. They must be used to verify that the transponder makes reservations only when the reservation is accompanied by extraction of the message.

DRAFT © 2007 RTCA, Inc.

There are 18 x 16 + 6 = 294 interrogation patterns to be used.

Test Sequence.

All 18,522 combinations of the 63 transponder states and 294 valid interrogation patterns must be used. Interrogate so that the transponder enters a given state and then use all interrogation patterns that will not change the state, followed by patterns that will. Repeat with the now acquired state. This must be done until all 18,522 combinations have been exhausted. Some combinations must be repeated because more than one interrogation pattern can change the state.

To 'set the B-bit', use DR=1 and DR=3 commands alternately during the test sequence.

Required Negative Tests

Concurrent tests are part of the sequence above.

If PC is not required to be 4, use all other codes. If DI is not required to be 1, use all other codes. If MBS is not required to be 1 or 2, use codes 3 and 4. If RR is required to be less than 16, use all codes less than 16.

Inserted tests must be interspersed within the sequence.

Insert interrogations of formats other than UF=4, 5, 20, 21 and verify that they have no effect on the protocol.

Such interrogations should constitute one percent of the total number of interrogations used.

The interrogation patterns 2, 5, 8, 11, 14, 17, 20 and 23 must include, when RR=16 is used, the combinations of RR=16 with DI=7 and RRS Codes 1 through 15. It must be verified that these combinations do not cause the air-initiated Comm-B message to be transmitted.

UM Field Verification

During the test sequence when a multisite reservation is made (column C), the following reply will contain IIS and IDS in the UM field according to §2.2.19.2.1.2. Verify that these patterns are correct.

Timer Duration and Automatic Closeout Test

Arrange the sequence so that the timer runs out occasionally. Verify timer duration and closeout.

Simultaneous Tests

While the transponder is undergoing the verification of the B-protocol, the number of interrogations and replies can be used to make tests for interface action, message content, etc. Such tests are described in Procedures 19 through 23.

DRAFT © 2007 RTCA, Inc.

2.5.4.18A Procedure #18A Enhanced Comm-B Protocol

If the transponder adheres to the enhanced air-initiated Comm-B protocol as described in §2.2.21.1.2, the following test procedures **shall** verify that the enhanced protocol is carried out correctly by the transponder.

The following tests verify that:

The transponder will properly carry out the Comm-B protocol and will operate with non-selective interrogators, interrogators in multisite configuration and interrogators that will take advantage of the enhanced protocol and extract B messages without making Comm-B reservations. The modified Comm-B protocol test will verify that the transponder can properly carry out the enhanced Comm-B protocol, handling 16 independent B timers, one for each II and up to 16 concurrent Comm-B messages waiting indications to ground interrogators.

Procedure:

The transponder **shall** be tested according to the guidelines stipulated in procedure 18 with the following additions and/or modifications:

Transponder conditions E and F are defined for non-selective and IIS values 1 - 15. The transponder condition G is defined for IIS values 1 - 15. Condition H is no longer a necessary condition since the transponder can have 15 concurrent reservations.

Procedure 18 is expanded to include additional combinations of conditions E, F and G. For current transponder state 1, produce 15 additional states with a Comm-B message not waiting for II=1 - 15. As the II varies, vary the number of other Comm-B messages waiting for the remaining II values from 0 - 15. States 2 and 3 must be similarly expanded except these states stipulate a Comm-B message waiting as II varies from 0 - 15. The number of Comm-B messages waiting concurrently with the Comm-B message for the II under test is to vary from 0 - 15. It should be noted that state changes from interrogations will be more extensive with the enhanced protocol and that proper setup is required to produce the required transponder states. It is necessary to produce a Comm-B message waiting for the proper IIS by input of directed Comm-Bs to the transponder or a Comm-B message for II of 0 followed by the extraction by the necessary IIS. Verification of proper transponder state requires multiple interrogations to extract the transponder state for each IIS. An air initiated Comm-B message which is extracted by a non zero IIS potentially changes all 16 Comm-B message states. Those interrogation patterns used to close out a Comm-B message for a given IIS must insure that the proper message for the given IIS is closed out. The reply data for Comm-B messages **shall** be verified. Each of the interrogation patterns 1 through 24 inclusive are now IIS sensitive and must be run for each IIS value.

Additionally, verify for each IIS that upon B timer expiration, the message for that IIS is indicated as available to all other available II codes. Repeat the procedures defined above for 2, 3 and 4 segment Comm-Bs and insure that the proper data is indicated in the replies.

UM Field Verification

In all cases, verify that the transponder reports the proper state in the UM field and the report is for the IIS contained in the interrogation pattern.

DRAFT © 2007 RTCA, Inc.

2.5.4.19 Procedure #19 AIS Flight Identification, Protocol and Interface

(§2.2.14.4.20 – BDS)
(§2.2.14.4.35 – RR)
(§2.2.19.1.13 – protocol)
(§2.2.19.1.13 – AIS field)
(§2.2.19.1.17 – interface)

This test procedure verifies that the transponder, given the correct interrogation, reports its identification in the MB field of a Comm-B reply. Also verified is the correct function of the interface used to insert the identifying code.

Interface

The test patterns and sequences are independent of the interface design.

Interface Patterns

AIS is a 48-bit subfield, using bits 41 to 88. A total of 1128 patterns containing two ONEs and 1128 patterns containing two ZEROs must be used for interface verification.

Interrogation Patterns and Test Sequence

If during the B-protocol test procedure (Procedure #18), an interrogation pattern is used that requires RR to be larger than 16 (Column L), use RR=18 as often as is required to verify the 2256 test patterns for AIS. Also verify that BDSl=2 and BDS2=0 are in the replies.

2.5.4.20 Procedure #20 Extended Capability Report

(§2.2.14.4.20 – BDS)
(§2.2.14.4.35 – RR)
(§2.2.19.1.12.2 – extended data source)
(§2.2.19.1.12.5 through §2.2.19.1.12.7 – protocol)
(§2.2.19.1.12.8 – updating)
(§2.2.19.1.17 – interface)
(§2.2.22.1.2.2)

This test procedure verifies that the transponder, given the correct interrogation, reports its capability in the MB field of a Comm-B reply. Also verified is the correct functioning of the interface used (if any) and the updating function if it is part of the transponder.

Interface

The source that generates the content of the extended capability report may be internal or external to the transponder. If internal, only the correctness of the report can be verified, if external and not connected to the transponder, the interface action must be verified.

Interface Patterns

The extended capability report occupies the last 48 bits of MB and carries BDS1=1 and BDS2=0, 1; BDS2 codes larger than 1 may also be used.

A total of 2256 interface verification patterns (Procedure #19) must be used if an external report source is used.

DRAFT © 2007 RTCA, Inc.

Interrogation Patterns

If during the B-protocol test procedure (Procedure #18) an interrogation pattern is used that requires RR to be larger than 16 (Column L), use RR=17 as often as required to carry out the extended capability report verification.

Test Sequence for Internal Report Source

Use RR=17 and, if required, RR=17, DI=7 and RRS=required BDS2 to extract the report.

Verify that the content of the report is correct.

If possible, change the capability and observe that the transponder gives a broadcast Comm-B request. Verify the content of the new report.

2.5.4.21 Procedure #21 Directed Comm-B

(§2.2.19.2.3.2 – protocol)
(§2.2.13.3.2 – interface [see note])

This test procedure verifies that multisite directed Comm-B transmissions are carried out correctly by the transponder.

Transponder Design

The command to the transponder, that an air-initiated Comm-B **shall** be directed to a known sensor, originates in a peripheral device. The transponder must recognize such a command and may be designed to accept it in one of two ways.

One possible design operates as follows: Regardless of the transponder state, the interface inserts a downlink pattern containing DR=1 (the B-bit), IIS (the UM code of the desired destination), and IDS (the UM Comm-B reservation code). Usually, the transponder would pass through the IIS and IDS codes without further examination. For this function, however, both are sensed so that, as soon as the T_{RB} timer is found not to be running, this pattern can be used for a routine surveillance or communication reply. The protocol sequence as tested in Procedure #18 then takes over and completes the transaction cycle.

Another design would provide for a separate dedicated interface which may accept only the desired destination or may be designed to take all of the directed communication.

The interface adapter used in the test setup must conform to the design of the transponder to be tested.

Interface Patterns of Test Sequence

During the B-protocol test procedure (Procedure #18), use the interface pattern as described above or enter into the special interface the patterns necessary to cause a directed Comm-B initiation.

Use IIS codes from 1 to 15 (a total of 15 codes) and reply formats DF=4, 5, 20, 21.

Verify that the pattern transmitted by the transponder corresponds to the pattern inserted. Give special attention to the BDS codes that may have been inserted, depending on transponder design.

DRAFT © 2007 RTCA, Inc.

Verify that this directed Comm-B has not interrupted another existing reservation condition. If the transponder has implemented the enhanced multisite Comm-B protocol, verify that if an air-initiated message has been extracted by a given non zero IIS and the transponder is currently reserved for the IIS extracting it, that a directed Comm-B message to this IIS is queued and made available subsequent to the closeout of the B message to this IIS.

Verification that this Comm-B has been extracted by the assigned interrogator is intrinsic in Procedure #18 and need not be repeated.

2.5.4.21A Procedure #21A Comm-B Broadcast (§2.2.19.1.12.4.1 protocol)

Test Procedure:

Notes:

1. *The command to the transponder that a Comm-B broadcast message* ***shall*** *be sent originates in a peripheral device or in the device that holds the extended capability report.*

2. *The Comm-B broadcast does not affect the existing Comm-B protocol, air or ground initiated. The existing test procedures remain unchanged.*

3. *Verification of interface patterns is already part of the Comm-B test procedures and need not be repeated for the Comm-B Broadcast.*

This test procedure verifies that the Comm-B broadcast protocol is carried out correctly.

During the B-protocol test procedure (Procedure #18) insert the appropriate DR code command and text of the Comm-B broadcast into the transponder.

Verify that:

1. The transponder does show the DR codes 4, 5, 6, or 7 only when no air-initiated Comm-B transaction is in progress.

2. The Comm-B broadcast message can be extracted by the interrogator for 18 ±1 seconds.

3. The Comm-B broadcast annunciation (DR=4, 5, 6, or 7) and the Comm-B broadcast text are interrupted by an air-initiated Comm-B initiation and reappear when that transaction is concluded. For transponders implementing the enhanced air initiated Comm-B protocol, the transponder will be independently interrupted by up to 16 Comm-B messages that are assigned to each II code. After the Comm-B is concluded for each II, the Comm-B broadcast is again available to that interrogator. Verify that the next waiting broadcast message is not announced to any interrogators until the current broadcast message has timed out for all interrogators.

4. After interruption another 18 ±1 seconds of broadcast time is available to the interrogator. For transponders implementing the enhanced air-initiated Comm-B protocol, the transponder will be independently interrupted by up to 16 Comm-B messages that are assigned to each II code. After interruption, another 18 ±1 seconds of broadcast time is available for each II.

DRAFT © 2007 RTCA, Inc.

5. A subsequent and different Comm-B broadcast message is announced with the alternate DR code and that this DR code also follows verifications 1 through 4 above. For transponders implementing the enhanced air-initiated Comm-B protocol, the transponder will be independently interrupted by up to 16 Comm-B messages that are assigned to each II code. The subsequent Comm-B broadcast is announced only after each Comm-B is broadcast timer has expired for all II codes.

2.5.4.22 Procedure #22 Downlink Interface, Storage Design, Buffer Rate

(§2.2.13.3.2.c – buffer rate)
(§2.2.13.3.2.d – buffer function)
(§2.2.13.3.2.e – unavailable data)
(§2.2.3.4.2 – data rate)

This test procedure verifies that, when a storage design is used for the downlink interface, the buffer functions correctly and that the buffer capacity is sufficient. Transponder action when data are not available is also verified.

Interface Patterns

The buffer must contain at least 16 MB patterns. The 16 MB patterns can have 16 different BDSl and 16 different BDS2 codes, a total of 256. Several messages (MB patterns) with identical codes can exist for insertion as air-initiated Comm-B.

Air-Initiated Comm-B

The buffer must have space to indicate which of the stored MB patterns are intended for air-initiated Comm-B. It must have means to sequence their insertion in the order received.

Message Output

If the interface circuit used for the AIS and the extended capability reports is also used in this test, message content verification has already been done. It is recommended that differing patterns be used for different BDS codes.

If the interface circuit is not the one already verified, the 2256 test patterns described in Procedure #19 must be used.

Buffer Input Rate

The buffer input rate must be at least 16 MB patterns per second; there is no upper limit, because aircraft data can be updated so that a newly arrived pattern replaces an already stored pattern of the same BDS code.

Test Sequence, Buffer Design

Enter 16 messages into the downlink interface in the following sequence:

a. Five messages with different BDS codes and intended for air-initiated Comm-B.

b. Eight messages with different BDSl codes intended for ground initiation.

DRAFT © 2007 RTCA, Inc.

c. Two messages with BDS codes identical to the codes intended for air-initiation but with message content differing.

d. One message identical in BDS code but differing in content from the group in b above.

The object of this test sequence is to verify that:

The five air-initiated messages are delivered in the sequence received, and the B-Protocol (Column L of the interrogation patterns listed in Procedure #18) is carried out correctly. The differing BDS codes serve to identify the sequence of the messages.

The 8 ground-initiated messages are extracted by RR corresponding to their BDS1 code in a sequence chosen by the interrogator and that these messages can be extracted several times each.

The buffer has separately stored messages not intended for air-initiation, i.e., the buffer must not replace existing BDS codes if they are intended for air-initiation.

The message in d above has replaced (updated) one of the eight ground-initiated messages and that only this message, rather than the previous entry, is transmitted when the interrogator calls for it.

An MB field consisting of all ZEROs is transmitted if the interrogation asks for a BDS code not presently in the buffer.

This test sequence fits into the sequence of Procedure #18.

<u>Test Sequence, Buffer Rate and Function</u>

Enter 16 messages with differing BDS (BDS1 and BDS2) codes into the buffer.

In the next three seconds:

a. Interrogate at a rate of 1250/sec (once every 800 microseconds), extracting the messages from the buffer by use of the required RR, DI and RRS codes. Stop interrogating after all messages have been received once.

b. Start entering replacement messages with differing content but identical BDS codes at the rate of at least 16/sec.

c. One second after the start of this sequence (a), start extracting the messages again. Schedule extraction in bursts, each burst consisting of two interrogations following each other 800 microseconds apart. Schedule eight bursts, one after each 125 milliseconds.

d. Two seconds after the start, continue extracting messages at the rate of five/sec.

<u>Verifications:</u>

Test “a” above verifies that the transponder and the buffer can sustain the minimum reply rate as specified.

DRAFT © 2007 RTCA, Inc.

Tests “b” and “c” are used to verify that messages of like BDS codes are replaced and that in this process no scrambling of messages occurs.

Test “d” verifies that, as messages are updated, they are replaced within the buffer structure regardless of whether they have been transmitted.

This test sequence fits into the sequence of Procedure #18.

2.5.4.23 Procedure #23 Downlink Interface, No-Storage Design

(§2.2.13.1.2.a – insertion)
(§2.2.13.3.2.b – no-storage design)
(§2.2.13.3.2.e – unavailable data)

This test procedure verifies that the no-storage design or "real time" downlink interface performs as specified.

Interface Patterns

This downlink interface operates in real time in conjunction with an uplink interface that also is a no-storage design. Message extraction commands for Comm-B appearing at the uplink interface are recognized by the message source which then enters the downlink content into the downlink interface in time to be transmitted in reply to the interrogation.

For air-initiated Comm-B transactions, the interface can insert the B-bit Code (DR=1) into short and long replies.

For directed Comm-B transmissions (Procedure #21), insertion of IIS and IDS into the UM field is required.

Because the data rate of a real-time interface equals the data rate of the transponder by definition, rate verifications are not necessary.

Test Sequence

If during the B-protocol test procedure (Procedure #18) messages have to be sent or message content has to be verified, supply this interface with the patterns required.

Verify interface design correctness by use of the 2256 test patterns described in Procedure #19.

Verify that B-bit insertion is accepted by the transponder in all applicable formats and that IIS and IDS insertion is accepted by the transponder only if the UM field is not in use for another purpose.

2.5.4.24 Procedure #24 Comm-C Protocol

(§2.2.20.1.1 through §2.2.20.1.1.1.8 – protocol)
(§2.2.20.1.3 through §2.2.20.1.3.5 – multisite)
(§2.2.19.2.1.1 through §2.2.19.2.2.2 – multisite)
(Figure 2-20 and Figure 2-21 – Flowchart)

This test procedure verifies that the Comm-C protocol is carried out correctly.

DRAFT © 2007 RTCA, Inc.

The test procedure follows the notation of transponder states and of interrogation patterns as shown in the flowcharts.

Transponder States

#	H	I	J	K	
1	0	0	0	0	No ELM action in progress.
2	0	0	1	0	Waiting for segments, not multisite.
3	0	0	1	1	Ready for cancellation by PC=5.
4	1	0	0	0	Multisite reservation made, waiting for RC=0.
5	1	0	1	0	Multisite, waiting for segments.
6	1	0	1	1	Cannot be canceled or closed out.
7	1	1	0	0	Can be canceled or closed out.
8	1	1	1	0	Can be canceled or closed out.
9	1	1	1	1	Ready for cancellation or closeout.

H = T timer running.
I = IIS = stored value.
J = setup active.
K = all segments received.

States 7, 8, 9 are II-sensitive and must be used 16 times. States 3, 6, 9 are sensitive to the number of segments in the ELM, and must be used 15 times.

There are 354 transponder states to be used.

DRAFT © 2007 RTCA, Inc.

Interrogation Patterns

#	B	D	A	C	E	F	M	N	O	
1	0	1	0	0	0	0	0	0	0	Ordinary surveillance/ Comm-A.
2	0	1	0	0	0	1	0	0	0	Invalid Closeout: DI is wrong.
3	0	1	0	0	1	0	0	0	0	Invalid Reservation: DI is wrong.
4	0	1	0	1	0	0	0	0	0	DI, but not for Comm-C.
5	0	1	0	1	0	1	0	0	0	Closeout.
6	0	1	0	1	1	0	0	0	0	Reservation.
7	0	1	1	0	0	0	0	0	0	Cancel if not multisite.
8	0	1	1	0	0	1	0	0	0	Cancel if not multisite.
9	0	1	1	0	1	0	0	0	0	Cancel if not multisite.
10	0	1	1	1	0	0	0	0	0	Cancel if not multisite, DI not for Comm-C.
11	0	1	1	1	0	1	0	0	0	Cancel if not multisite and closeout.
12	0	1	1	1	1	0	0	0	0	Cancel if not multisite and reservation.
13	1	0	0	0	0	0	0	0	0	UF=24, not for Comm-C.
14	1	0	0	0	0	0	0	0	1	Segment with TAS request.
15	1	0	0	0	0	0	0	1	0	Segment.
16	1	0	0	0	0	0	1	0	0	Initial Segment.

A = PC=5 = cancel C.
B = UF=24.
C = Dl=1 = multisite code.
D = UF=4, 5, 20, 21.
E = MES=1, 5 = reservation.
F = MES=2, 6, 7 = closeout.
M = RC=0.
N = RC=1.
O = RC=2.

Patterns 5 and 6 must be repeated 16 times for all IIS values.

Patterns 14, 15 and 16 must be repeated 15 times for all valid NC values.

There are 88 interrogation patterns to be used.

DRAFT © 2007 RTCA, Inc.

Test Sequence

All 31,152 combinations of the 354 transponder states and 88 valid interrogation patterns must be used. Interrogate so that the transponder enters a given state and then use all interrogation patterns that will not change the state, followed by patterns that will. Repeat with the now-acquired state. This must be done until all 31,152 combinations have been exhausted. Some combinations must be repeated because more than one interrogation pattern can change the state. Extraction of TAS (see flowchart) can be used for verification.

Required Negative Tests

If PC is not required to be 5, use all other codes. If MES is not required to be l, 2, 5, 6, 7, use all other codes.

If RC is not required to be 0, 1, 2, use RC=3.

Insert interrogation formats other than UF=4, 5, 20, 21, 24 one percent of the time to verify that they have no effect on the protocol.

UM Field Verification

During the test sequence when a multisite reservation is made (patterns 6, 12), the following reply will contain IIS and IDS in the UM field according to §2.2.19.2.1.2. Verify that the UM content is correct.

TAS Field Verification

During the test sequence when a TAS report is requested (pattern 14), the reply will contain the TAS field. Verify that the content of TAS is correct.

Timer Duration and Automatic Closeout Test

Arrange the sequence so that the timer runs out occasionally and verify timer duration and closeout.

Simultaneous Tests

While the transponder is undergoing the verification of the C-protocol, the interrogations can also be used to make tests for interface action and message content. These tests are described in Procedure #25.

Enhanced Uplink ELM Protocol

If the enhanced uplink ELM protocol is implemented, the procedure above is modified to reflect the automatic reservation of uplink ELMs. Transponder states 2, 3, 4, 5 and 6 are eliminated. The remaining states 1, 7, 8 and 9 are expanded due to conditions H, J and K varying for each II code. Condition H is expanded to 16 conditions, one for each II code. Condition I is no longer meaningful. Conditions J and K are also expanded to 16, one for each II code. State 1 for II code of 0 is simultaneous with the other 15 II codes varying between states 1, 7, 8 and 9. The number of iterations to run every possible combination is impractical. The test procedure will use different combinations of the additional possible states to provide verification of parallel operations. Interrogation patterns 14, 15 and 16 are further repeated 16 times for all IIS values. The verification procedure will

DRAFT © 2007 RTCA, Inc.

include matching the reported segment data for each II code to that sent in the interrogation. The subset of the expanded states to run are:

1) 16 states, where the conditions are met once for each of the II codes.

2) 15 states, where the conditions are met for II code 0 along with one single II code.

3) 15 states, where the conditions are met for 2 non zero II codes, 3, 4, 5, etc. to 15 parallel non zero II codes and ending with all 16 II codes meeting the conditions.

The conditions for the other II codes not stipulated can be uniformly selected to provide a distribution of concurrent conditions.

The above results in 46 states to test in replacement of state 1, 46 states from state 7, 46 states to replace state 8 and 690 states to replace state 9.

2.5.4.25 Procedure #25 Uplink Interface, ELM-C

(§2.2.13.4 – interface)
(§2.2.20.1.4 – interface rate)

This test procedure verifies that the information contained in Comm-C interrogations passes out of the transponder within the specified time interval and that such information correctly replicates the received transmission content. This test is independent of the interface design.

Interrogation Pattern

UF=24.

MC=6320 different patterns, half containing two ONEs, half containing two ZEROs.

Test Sequence

If during the C-Protocol test procedure (Procedure #24), all segments have been received and are shifted out of the interface (Column K), verify that their content corresponds to the previously inserted patterns.

Verify that the content of four 16 segment ELMs can be extracted from the interface in any four second interval or, in one second if the transponder adheres to the enhanced uplink ELM protocol.

Interrogate with a burst of 16 segments and repeat 4 seconds later, one second later if the transponder adheres to the enhanced uplink ELM protocol.

Verify that the content of the first burst appears at the interface before the second burst is transmitted.

Verify the content of both bursts.

This test fits into the sequence of Procedure #24.

DRAFT © 2007 RTCA, Inc.

2.5.4.26 Procedure #26 Comm-D Protocol

(§2.2.19.2.1.1 – SD codes)
(§2.2.19.2.1.2 – UM codes)
(§2.2.19.2.2.1 and §2.2.19.2.2.2 – multisite)
(§2.2.20.2.3 through §2.2.20.2.3.6 – multisite)
(§2.2.20.2.1.1 through §2.2.20.2.1.1.5 – ELM-D)
(Figure 2-22 and Figure 2-23 – Flowchart)

This test procedure verifies that the Comm-D protocol is carried out correctly.

The test procedure follows the notation of transponder states and interrogation patterns as shown in the flowcharts.

Transponder States

#	E	F	
1	0	0	Not multisite, will accept cancellation or reservation.
2	0	1	Not multisite, will accept cancellation or reservation.
3	1	0	Multisite, will not accept closeout, cancellation, reservation.
4	1	1	Multisite, will accept closeout, cancellation, reservation.

E = T_{RD} timer running.
F = IIS = stored value.
States 3 and 4 are IIS-sensitive and must be used 16 times.

There are 35 transponder states to be used.

Transponder Design

The maximum number of segments that transponders are able to transmit in one burst varies from 4 to 16; the number of tests to be made varies with the burst capability.

DRAFT © 2007 RTCA, Inc.

Interrogation Patterns

#	H	G	A	B	C	D	I	
1	0	1	0	0	0	0	0	Ordinary interrogation.
2	0	1	0	0	0	1	0	Invalid closeout, DI wrong.
3	0	1	0	0	1	0	0	Invalid reservation, DI wrong.
4	0	1	0	1	0	0	0	Multisite, not for Comm-D.
5	0	1	0	1	0	1	0	Closeout.
6	0	1	0	1	1	0	0	Reservation.
7	0	1	1	0	0	0	0	Cancellation, not multisite.
8	0	1	1	0	0	1	0	Cancellation, not multisite.
9	0	1	1	0	1	0	0	Cancellation, not multisite.
10	0	1	1	1	0	0	0	Cancellation, multisite not for Comm-D.
11	0	1	1	1	0	1	0	Cancellation and possible closeout, multisite.
12	0	1	1	1	1	0	0	Cancellation, not multisite and reservation.
13	1	0	0	0	0	0	0	UF=24, not for Comm-D.
14	1	0	0	0	0	0	1	UF=24, command to transmit segments per SRS.

A = PC=6 cancel D.
B = DI=1 multisite.
C = MES=3, 6 reservation.
D = MES=4, 5, 7 closeout.
G = UF=4, 5, 20, 21.
H = UF=24.
I = RC=3.

Patterns 5, 6, 11, 12, must be used at least 16 times to provide for all II codes.

Pattern 14 must be used as often as necessary to exhaust the SRS and DR codes according to the capability of the transponder.

Verify that cancellation does not occur when the D-register of Figure 2-22 and Figure 2-23 is not set, i.e., when no request for transmission has been complied with yet.

Test Sequence

The number of combinations of transponder states and interrogation patterns is design dependent. All combinations must be exercised.

DRAFT © 2007 RTCA, Inc.

DR Verification

At the Comm-B downlink interface, apply a request for air-initiated Comm-B (DR=1), and at the Comm-D interface apply a request to send a Comm-D ELM (DR larger than 15).

Verify that Comm-B has priority by observing that the B-protocol must be closed out before the DR code of the Comm-D transaction appears in replies.

Verify that the DR field in DF=4, 5, 20, 21 correctly states the number of segments waiting at the interface to be transmitted.

UM Verification

If a multisite reservation is made during the test sequence (patterns 6, 12), the following reply will contain IIS and IDS in the UM field according to §2.2.19.2.1.2. Verify that the UM content is correct.

SRS Verification

Consider the SRS bit pattern as a code of length corresponding to the maximum burst capability of the transponder. Use all combinations containing two ONEs and all combinations containing two ZEROs for this word length as the test pattern for the following verifications.

Verify that the transponder correctly transmits the number and identity of segments requested in the SRS subfield of UF=24 with RC=3.

The identity of segments is indicated in the ND field of each segment and must be inserted at the ELM downlink interface.

Verify that if SRS requests a segment identity which is not available in this transaction, the transponder will send ND according to the request but will leave the MD field of that reply all ZEROs.

Required Negative Tests

If PC is not required to be 6, use all other codes. If DI is not required to be 1, use all other codes. If MES is not required to be 3, 4, 5, 6, 7 use all other codes.

Insert interrogation formats other than UF=4, 5, 20, 21, 24 one percent of the time to verify that they have no effect on the protocol.

Timer Duration and Automatic Closeout Test

Arrange the sequence so that the timer runs out occasionally and verify timer duration and closeout.

Simultaneous Tests

While the transponder is undergoing the verification of the D-Protocol, the number of interrogations can be used to make tests for interface action and message content. These tests are described in Procedures #27 and #28.

DRAFT © 2007 RTCA, Inc.

Enhanced Downlink ELM Protocol

If the transponder adheres to the enhanced multisite downlink ELM protocol as described in §2.2.21.3, the following test procedures **shall** verify that the enhanced protocol is carried out correctly by the transponder.

The transponder **shall** be tested according to the guidelines stipulated above with the following additions and/or modifications:

Transponder condition E is defined for non-selective and IIS values 1 - 15. The transponder condition F is no longer meaningful.

The test will be expanded to include the additional combinations of condition E since the condition exists for each II. The resulting transponder states consist of all combinations of conditions for each of the 16 II codes.

UM Verification

In all cases, verify that the transponder reports the proper state in the UM field and the report is for the IIS contained in the interrogation pattern.

DR Verification

Verify the DR code as described with the addition of DR code extraction for all IIS codes and under the conditions of concurrent B messages, B broadcast messages and downlink ELMs.

2.5.4.27 Procedure #27 Directed Comm-D

(§2.2.20.2.3.2 – protocol)

This test procedure verifies that multisite directed Comm-D transactions are carried out correctly by the transponder.

The comments on transponder design dependence of this test are essentially the same as presented in Procedure #21.

Interface Patterns of Test Sequence

During the D-protocol test procedure (Procedure #26) enter into the interface a downlink pattern containing DR corresponding to the number of segments to be transmitted, IDS=3 (the UM code for Comm-D reservation) and IIS corresponding to the desired destination's code.

Use all IIS codes from 1 to 15 and interrogate so that the downlink formats DF=4, 5, 20, 21 are used.

Verify that this directed Comm-D has not interrupted an existing reservation condition.

Reply and coding content are verified as part of Procedures #26 and #28 respectively.

DRAFT © 2007 RTCA, Inc.

2.5.4.28 Procedure #28 Comm-D Interface, Rate and Content

(§2.2.13.4 – interface)
(§2.2.20.2.4 – data rate)

This test procedure verifies that the downlink interface can sustain the required data rate and that the transponder transmits downlink content as entered.

Transponder Design

The Comm-D interface can exist as a separate port or as one direction of a bidirectional ELM (C/D) interface. The downlink port can be designed to take the ND and MD fields only, leaving the UF and KE generation to internal circuitry. Another design would need input for DF and KE as well.

The minimum input data rate for this interface must equal the maximum reply capability of the transponder. The maximum practical reply capability is 16 segments in four seconds, although that is not specified in this document.

Interface Patterns

For each ND code appropriate for the transponder under test, generate a total of 6320 MD patterns, half containing two ONEs and half containing two ZEROs.

Test Sequence

Use all required MD patterns and all ND patterns possible for this transponder.

Verify that the patterns are transmitted as entered.

Schedule Comm-D transactions at the maximum rate for which the transponder is designed (4 to 16 segment DELMs at a rate of one per 4 seconds for a standard DELM transponder, 16 segment DELMs at a rate of one per second for an enhanced DELM transponder).

Verify that the interface can supply new MD patterns at those rates.

Note: *It may be necessary to schedule more Comm-D transactions than are required for the protocol test alone.*

2.5.4.29 Not Used

2.5.4.30 Procedure #30 Sensitivity Level Operation (§2.2.22.1.1 and §2.2.22.1.5)

This test verifies that the transponder (1) accepts incoming UF=20, 21 interrogations containing a Sensitivity Level Command Message and passes all necessary information (IIS and SLC subfields) to the TCAS unit, and (2) receives sensitivity level information from the TCAS unit and correctly reports this information in outgoing DF=0, 16 replies.

a. Send a status = "on-board TCAS with vertical-only resolution capability" and a sensitivity level=6 to the transponder via the transponder/TCAS interface.

DRAFT © 2007 RTCA, Inc.

Interrogate the transponder with a UF=0 and a UF=16 non-acquisition interrogation.

Show that the transponder correctly reports the TCAS status and sensitivity level in the RI and SL fields respectively.

b. Interrogate the transponder with a UF=20 interrogation containing a Sensitivity Level Command Message (ADS1=0, ADS2=5, and TMS=0) with IIS=1 and SLC=4.

Show that the IIS and SLC subfields are correctly output on the transponder/TCAS interface.

c. Interrogate the transponder with a UF=21 interrogation containing a Sensitivity Level Command Message with IIS=15 and SLC=5.

Show that the IIS and SLC subfields are correctly output on the transponder/TCAS interface.

d. Send a sensitivity level=4 to the transponder via the transponder/TCAS interface. Interrogate the transponder with a UF=0 and a UF=16 non-acquisition interrogation.

Show that the transponder correctly reports the TCAS status and sensitivity level in the RI and SL fields respectively.

2.5.4.31 Procedure #31 Transmission of RA Report to Mode S Sensor (§2.2.22.h and §2.2.22.1.2.1)

This test verifies that the transponder correctly determines the transponder/TCAS system capability (either FAA TSO-C119A or RTCA/DO-185A compatibility) based on communication with the on-board TCAS unit and then reports RA information in the appropriate format. This test requires that the transponder demonstrate proper operation with both FAA TSO-C119A and RTCA/DO-185A compatible transponder/TCAS interfaces.

This test verifies that the transponder correctly (1) receives RA information from the TCAS unit, (2) indicates to the ground (DR field in DF=4, 5, 20, and 21 replies) that it has information awaiting downlink, (3) transmits this information in DF=20, 21 replies, (4) retains RA information for 18 ±1 seconds following the end of the RA, and (5) (for RTCA/DO-185A compatible transponder/TCAS systems) properly indicates the end of the RA via the RA Terminated indicator.

Note: *The tests refer to a "TCAS bit" in the DR field of DF=4, 5, 20, and 21 replies. The TCAS bit is interpreted herein as bit 12 of the 5-bit (bits 9-13) DR field. That is, if DR=2, 3, 6, or 7, then the "TCAS bit" is set, and the transponder is therefore indicating that it has TCAS information available.*

DRAFT © 2007 RTCA, Inc.

2.5.4.31.1 Procedure #31 Transmission of RA Report for a Transponder Operating with an FAA TSO-C119A Compatible TCAS (§2.2.22.h, §2.2.22.1.2.1, §2.2.22.1.2.1.1, and §2.2.22.1.2.1.2)

a. ARA=0 and RAC=0:

Interrogate the transponder with UF=4, 5, 20, and 21 interrogations when no RA information has been received via the transponder/TCAS interface.

Show that the TCAS bit in the DR field is not set in the DF=4, 5, 20, and 21 replies.

b. ARA≠0 and RAC≠0:

Send ARA=‘10000000000000’ and RAC=‘1000’ to the transponder via the transponder/TCAS interface.

Interrogate the transponder with UF=4, 5, 20, and 21 interrogations.

Show that the ‘TCAS bit’ in the DR field is set in the DF=4, 5, 20, and 21 replies.

Interrogate the transponder with UF=4, 5, 20, and 21 interrogations with RR=19.

Show that the TCAS bit in the DR field is set in the DF=20 and 21 replies. Show that the ARA and RAC information is correctly reported in the DF=20 and 21 replies.

Send ARA=0 and RAC=0 to the transponder via the transponder/TCAS interface.

Interrogate the transponder once per second for the next 20 seconds with a UF=4 interrogation with RR=19.

Show that for 18 ±1 seconds after the end of the RA, the TCAS bit in the DR field in the reply remains set and that ARA=1000000000000 and RAC=1000 are reported. Show that after 18 ±1 seconds, the TCAS bit in the DR field in the reply is not set and that ARA=0 and RAC=0 are reported.

c. ARA≠0 and RAC=0:

Repeat all portions of step b replacing every instance of RAC=1000 with RAC=0.

d. ARA=0 and RAC≠0:

Send ARA=0 and RAC=‘1000’ to the transponder via the transponder/TCAS interface.

Interrogate the transponder with UF=4, 5, 20, and 21 interrogations.

Show that the TCAS bit in the DR field is not set in the DF=4, 5, 20, and 21 replies.

Interrogate the transponder with UF=4, 5, 20, and 21 interrogations with RR=19.

DRAFT © 2007 RTCA, Inc.

Show that the 'TCAS bit' in the DR field is not set in the DF=20 and 21 replies.

Send ARA=0 and RAC=0 to the transponder via the transponder/TCAS interface.

Interrogate the transponder once per second for the next 20 seconds with a UF=4 interrogation with RR=19.

Show that the TCAS bit in the DR field in the replies is not set.

e. ARA≠0, RAC≠0, new ARA and RAC values received during 18-second time-out:

Send ARA='00000100000000' and RAC='0100' to the transponder via the transponder/TCAS interface.

Interrogate the transponder with UF=4, 5, 20, and 21 interrogations.

Show that the TCAS bit in the DR field is set in the DF=4, 5, 20, and 21 replies.

Interrogate the transponder with UF=4, 5, 20, and 21 interrogations with RR=19.

Show that the TCAS bit in the DR field is set in the DF=20 and 21 replies. Show that the ARA and RAC information is correctly reported in the DF=20 and 21 replies.

Send the following sequence (60 seconds total) of ARA and RAC data to the transponder via the transponder/TCAS interface.

For 5 seconds, ARA=0 and RAC=0;

For the next 5 seconds, ARA='10000000000000' and RAC='1000';

For the next 5 seconds, ARA='01000000000000' and RAC=0;

For the next 5 seconds, ARA=0 and RAC=0;

For the next 5 seconds, ARA=0 and RAC='0100';

For the next 5 seconds, ARA='01000000000000' and RAC=0;

For the next 30 seconds, ARA=0 and RAC=0.

Interrogate the transponder once per second during the 60 seconds described above with UF=4 interrogations with RR=19.

Show that the TCAS bit in the DR field in the replies remains set for the first 48 ±1 seconds and is set to ZERO thereafter. Show that in the replies:

For the first 5 seconds, ARA='00000100000000' and RAC='0100';

For the next 5 seconds, ARA='10000000000000' and RAC='1000';

For the next 38 ±1 seconds, ARA='01000000000000' and RAC=0;

DRAFT © 2007 RTCA, Inc.

For the next 12 ±1 seconds, ARA=0 and RAC=0.

RAT=1 from 16 seconds to 25 seconds and from 31 seconds to 48 seconds, and that RAT=0 at other times.

2.5.4.31.2 Procedure #31 Transmission of RA Report for a Transponder Operating with an RTCA/DO-185A Compatible TCAS (§2.2.22.h, §2.2.22.1.2.1, §2.2.22.1.2.1.1, and §2.2.22.1.2.1.3)

a. ARA=0 and RAC=0:

Interrogate the transponder with UF=4, 5, 20, and 21 interrogations when no RA information has been received via the transponder/TCAS interface.

Show that the 'TCAS bit' in the DR field is not set in the DF=4, 5, 20, and 21 replies.

b. ARA≠0 and RAC≠0:

Send ARA='10000000000000', RAC='1000', RAI=0, MTE=0, TTI=1, and TID='AAAAAA' {HEX} to the transponder via the transponder/TCAS interface.

Interrogate the transponder with UF=4, 5, 20, and 21 interrogations.

Show that the 'TCAS bit' in the DR field is set in the DF=4, 5, 20, and 21 replies.

Interrogate the transponder with UF=4, 5, 20, and 21 interrogations with RR=19.

Show that the 'TCAS bit' in the DR field is set in the DF=20 and 21 replies.

Show that the ARA, RAC, RAT(=0), MTE, TTI, and TID are correctly reported in the DF=20 and 21 replies.

Send ARA=0, RAC=0, RAI=1, and MTE=0 to the transponder via the transponder/TCAS interface.

Interrogate the transponder once per second for the next 20 seconds with a UF=4 interrogation with RR=19.

Show that for 18 ±1 seconds after the end of the RA, the 'TCAS bit' in the DR field in the reply remains set, and that RAT=1, ARA='10000000000000', RAC='1000', MTE=0, TTI=1, and TID='AAAAAA' {HEX} are reported. Show that after 18 ±1 seconds, the 'TCAS bit' in the DR field in the reply is not set and that RAT, ARA, RAC, MTE, TTI, and TID are all set to ZERO.

c. ARA≠0 and RAC=0:

Repeat all portions of step b replacing every instance of RAC='1000' with RAC=0, and replacing TTI=1, TID='AAAAAA' {HEX} with TTI=2, TIDA='0101010101010', TIDR='1010101', TIDB='010101'.

DRAFT © 2007 RTCA, Inc.

d. ARA=0 and RAC≠0:

Send ARA=0, RAC=‘1000’, RAI=1, and MTE=0 to the transponder via the transponder/TCAS interface.

Interrogate the transponder with UF=4, 5, 20, and 21 interrogations.

Show that the ‘TCAS bit’ in the DR field is not set in the DF=4, 5, 20, and 21 replies.

Interrogate the transponder with UF=4, 5, 20, and 21 interrogations with RR=19.

Show that the ‘TCAS bit’ in the DR field is not set in the DF=20 and 21 replies.

Send ARA=0, RAC=0, RAI=1, and MTE=0 to the transponder via the transponder/TCAS interface.

Interrogate the transponder once per second for the next 20 seconds with a UF=4 interrogation with RR=19.

Show that the ‘TCAS bit’ in the DR field in the replies is not set.

e. ARA≠0, RAC≠0, new ARA and RAC values received during 18-second time-out:

Send ARA=‘00000100000000’, RAC=‘0100’, RAI=0, MTE=0, TTI=1, and TID=‘555555’ {HEX} to the transponder via the transponder/TCAS interface.

Interrogate the transponder with UF=4, 5, 20, and 21 interrogations.

Show that the ‘TCAS bit’ in the DR field is set in the DF=4, 5, 20, and 21 replies.

Interrogate the transponder with UF=4, 5, 20, and 21 interrogations with RR=19.

Show that the ‘TCAS bit’ in the DR field is set in the DF=20 and 21 replies. Show that the ARA, RAC, RAT(=0), MTE, TTI, and TID are correctly reported in the DF=20 and 21 replies.

Send the following sequence (60 seconds total) of ARA and RAC data to the transponder via the transponder/TCAS interface.

For 5 seconds, ARA=0, RAC=0, RAI=1, MTE=0;

For the next 5 seconds, ARA=‘10000000000000’, RAC=‘1000’, RAI=0, MTE=0, TTI=1, and TID=‘AAAAAA’ {HEX};

For the next 5 seconds, ARA=‘01000000000000’, RAC=0, RAI=0, MTE=0, TTI=1, and TID=‘555555’ {HEX};

For the next 5 seconds, ARA=0, RAC=0, RAI=1, and MTE=0;

For the next 5 seconds, ARA=0, RAC=‘0100’, RAI=1, and MTE=0;

DRAFT © 2007 RTCA, Inc.

For the next 5 seconds, ARA=‘01000000000000’, RAC=0, RAI=0, MTE=0, TTI=1, and TID=‘555555’ {HEX};

For the next 30 seconds, ARA=0, RAC=0, RAI=1, and MTE=0.Interrogate the transponder once per second during the 60 seconds described above with UF=4 interrogations with RR=19.

Show that the ‘TCAS bit’ in the DR field in the replies remains set for the first 48 ±1 seconds and is set to ZERO thereafter. Show that in the replies:

For the first 5 seconds, ARA=‘00000100000000’, RAC=‘0100’, RAT=1, MTE=0, TTI=1, and TID=‘555555’ {HEX};

For the next 5 seconds, ARA=‘10000000000000’, RAC=‘1000’, RAT=0, MTE=0, TTI=1, and TID=‘AAAAAA’ {HEX};

For the next 5 seconds, ARA=‘01000000000000’, RAC=0, RAT=0, MTE=0, TTI=1, and TID=‘555555’ {HEX};

For the next 10 seconds, ARA=‘01000000000000’, RAC=0, RAT=1, MTE=0, TTI=1, and TID=‘555555’ {HEX};

For the next 5 seconds, ARA=‘01000000000000’, RAC=0, RAT=0, MTE=0, TTI=1, and TID=‘555555’ {HEX};

For the next 18 ±1 seconds, ARA=‘01000000000000’, RAC=0, RAT=1, MTE=0, TTI=1, and TID=‘555555’ {HEX};

For the next 12 ±1 seconds, ARA=0, RAC=0, RAT=0, and MTE=0.

2.5.4.32 Procedure #32 Transmission of TCAS Capability Information to a Mode S Sensor (§2.2.22.h and §2.2.22.1.2.2) and to other TCAS Aircraft (§2.2.22.1.5)

This test verifies that the transponder receives operational information from its associated TCAS unit and correctly reports this information in Data Link Capability Reports to a Mode S sensor and in special surveillance replies to another TCAS aircraft. This test requires that the transponder demonstrate proper operation with both FAA TSO-C119A and RTCA/DO-185A compatible transponder/TCAS interfaces.

2.5.4.32.1 Procedure #32 Transmission of TCAS Capability Information to a Mode S Sensor (§2.2.22.h, §2.2.22.1.2.2, §2.2.22.1.2.2.1, and §2.2.22.1.2.2.2) and to other TCAS Aircraft (§2.2.22.1.5) for a Transponder Operating with an FAA TSO-C119A Compatible TCAS

a. Enable the transponder only (i.e., establish the state where the transponder/TCAS interface is not operational).

b. Interrogate the transponder with a non-acquisition UF=0 interrogation.

Show that the transponder replies with the correct capability information in the DF=0 reply (i.e., RI=0).

DRAFT © 2007 RTCA, Inc.

c. Interrogate the transponder with the following four interrogations:

UF=4 with RR=17 and DI≠7;

UF=5 with RR=17 and DI≠7;

UF=20 with RR=17, DI=7, and RRS=0;

UF=21 with RR=17, DI=7, and RRS=0.

Show, in each of the four cases, that the transponder replies with the correct capability information in the DF=20, 21 replies (i.e., BDS1=1, BDS2=0, bit 48=0, and bits 69, 70, 71, and 72 = 0000).

d. Repeat the procedures in steps b and c above for each of the following 16 cases:

(1) TCAS reports "on-board TCAS with resolution capability inhibited" (RI=2) to the transponder via the transponder/TCAS interface.

Show that the transponder replies with RI=2 in the DF=0 reply.

Show that the transponder replies with bit 48=1 and bits 69, 70, 71, and 72 = '0000' in the DF=20, 21 replies.

(2) TCAS reports "on-board TCAS with vertical-only resolution capability" (RI=3) to the transponder via the transponder/TCAS interface.

Show that the transponder replies with RI=3 in the DF=0 reply.

Show that the transponder replies with bit 48=1 and bits 69, 70, 71, and 72 = '0100' in the DF=20, 21 replies.

(3) TCAS reports "on-board TCAS with vertical and horizontal resolution capability" (RI=4) to the transponder via the transponder/TCAS interface.

Show that the transponder replies with RI=4 in the DF=0 reply.

Show that the transponder replies with bit 48=1 and bits 69, 70, 71, and 72 = '1000' in the DF=20, 21 replies.

(4)-(16) TCAS reports RI=0, 1, 5, 6, 7, 8, 9, 10, 11, 12, 13, 14, and 15 to the transponder via the transponder/TCAS interface.

Show that for each case, the transponder replies with RI=0 in the DF=0 reply.

Show that for each case, the transponder replies with bit 48=0 and bits 69, 70, 71, and 72 = '0000' in the DF=20, 21 replies.

2.5.4.32.2 Procedure #32 Transmission of TCAS Capability Information to a Mode S Sensor (§2.2.22.h, §2.2.22.1.2.2, §2.2.22.1.2.2.1, and §2.2.22.1.2.2.3) and to other TCAS

Aircraft (§2.2.22.1.5) for a Transponder Operating with an RTCA/DO-185A Compatible TCAS

Repeat the procedures provided in steps "a" through "d" of §2.5.4.32.1 for an RTCA/DO-185A compatible transponder/TCAS interface.

Show that the transponder properly reports with the RI field in DF=0 replies set exactly as provided in steps "a" through "d" of §2.5.4.32.1.

Show that the transponder properly reports with DF=20, 21 replies that are exactly the same as those specified in steps "b" through "d" of §2.5.4.32.1 with the exception that bits 70 and 71 = "don't care" for the four cases in step "c" and bit 71 = 1 for cases 1 – 3.

2.5.4.33 Procedure #33 TCAS or transponder/TCAS Interface Failure During Transmission of RA Report and Data Link Capability Report to a Mode S Sensor (§2.2.22.1.2.1.3 and §2.2.22.1.2.2.3)

This test applies to RTCA/DO-185A compatible systems.

a. Send ARA='10000000000000', RAC='1000', RAI=0, MTE=0, TTI=1, and TID='AAAAAA' {HEX} to the transponder via the transponder/TCAS interface once per second for 5 seconds.

   During the 5th second, cause the TCAS unit to report a TCAS failure to the transponder (i.e., RI=0 and SL 1).

   Interrogate the transponder once per second during the 5 seconds described above and for an additional 25 seconds (30 seconds total) with UF=4 interrogations with RR=19 and DI 7.

   Show that in the DF=20 replies:

   For the first 23 ±1 seconds, the 'TCAS bit' is set in the DR field. Thereafter, it is cleared.

   For the first 5 seconds, ARA='10000000000000', RAC='1000', RAT=0, MTE=0, TTI=1, and TID='AAAAAA' {HEX}.

   For the next 18 ±1 seconds, ARA='10000000000000', RAC='1000', RAT=1, MTE=0, TTI=1, and TID='AAAAAA' {HEX}.

   For the remaining 7 ±1 seconds, ARA, RAC, MTE, TTI, and TID all = 0.

b. Repeat the steps in test a, except during the 5th second, cause the transponder to recognize a failure on the transponder/TCAS interface (i.e., disconnect or otherwise interrupt the interface).

   The results should be the same as in test a.

c. Send "on-board TCAS with vertical-only resolution capability" (RI=3) to the transponder via the transponder/TCAS interface for 5 seconds.

DRAFT © 2007 RTCA, Inc.

During the 5th second, cause the transponder to recognize a failure on the transponder/TCAS interface (i.e., disconnect or otherwise interrupt the interface).

Interrogate the transponder once per second for 30 seconds with UF=4 interrogations with RR=17 and DI 7.

Show that in the DF=20 replies:

For the first 5 seconds, bit 48=1, and bits 69, 70, 71, and 72 = '0110'.

For the next 25 seconds, bits 48, 69, 70, 71, and 72 all = 0.

2.5.4.34 Procedure #34 Coordination (§2.2.22.1.3 and §2.2.22.1.4)

This test verifies that the transponder (1) accepts incoming UF=16 interrogations containing a TCAS Resolution Message and passes all necessary information to the TCAS unit, and (2) receives coordination information from the TCAS unit and correctly reports this information in outgoing DF=16 replies. This test requires that the transponder demonstrate proper operation with both FAA TSO-C119A and RTCA/DO-185A compatible transponder/TCAS interfaces.

2.5.4.34.1 Procedure #34 Coordination (§2.2.22.1.3 and §2.2.22.1.4.1) for a Transponder Operating with an FAA TSO-C119A Compatible TCAS

a. Interrogate the transponder with a UF=16 interrogation with UDS=48, MTB=0, CVC=0, VRC=2, CHC=0, HRC=0, VSB=7 when no resolution advisory information has been received from the TCAS unit.

   Show that the transponder sends a DF=16 reply with VDS=48, ARA=0, and RAC=0.

   Show that the coordination information in the MU field is correctly output on the transponder/TCAS interface.

b. Send ARA=0 and RAC='0100' to the transponder from the TCAS unit.

   Interrogate the transponder with a UF=16 interrogation with UDS=48, MTB=0, CVC=0, VRC=2, CHC=0, HRC=0, VSB=7.

   Show that the transponder sends a DF=16 reply with VDS=48.

   Show that the coordination information in the MU field is correctly output on the transponder/TCAS interface.

c. Send ARA='00000100000000' and RAC='0100' to the transponder from the TCAS unit.

   Interrogate the transponder with a UF=16 interrogation with UDS=48, MTB=0, CVC=2, VRC=0, CHC=0, HRC=0, VSB=13.

   Show that the transponder sends a DF=16 reply with VDS=48, ARA='00000100000000', and RAC='0100'.

DRAFT © 2007 RTCA, Inc.

Show that the coordination information in the MU field is correctly output on the transponder/TCAS interface.

d. Send ARA='00000100000000' and RAC=0 to the transponder from the TCAS unit.

Interrogate the transponder with a UF=16 interrogation with UDS=48, MTB=0, CVC=2, VRC=0, CHC=0, HRC=0, VSB=13.

Show that the transponder sends a DF=16 reply with VDS=48.

Show that the coordination information in the MU field is correctly output on the transponder/TCAS interface.

e. Send ARA=0 and RAC=0 to the transponder from the TCAS unit.

Interrogate the transponder with a UF=16 interrogation with UDS=48, MTB=0, CVC=0, VRC=1, CHC=0, HRC=0, VSB=14.

Show that the transponder sends a DF=16 reply with VDS=48, ARA=0, and RAC=0.

Show that the coordination information in the MU field is correctly output on the transponder/TCAS interface.

2.5.4.34.2 Procedure #34 Coordination (§2.2.22.1.3 and §2.2.22.1.4.2) for a Transponder Operating with an RTCA/DO-185A Compatible TCAS

a. Interrogate the transponder with a UF=16 interrogation with UDS=48, MTB=0, CVC=0, VRC=2, CHC=0, HRC=0, VSB=7 when no resolution advisory information has been received from the TCAS unit.

Show that the transponder sends a DF=16 reply with VDS=48, ARA=0, RAC=0, RAT=0, and MTE=0.

Show that the coordination information in the MU field is correctly output on the transponder/TCAS interface.

b. Send ARA=0, RAC='0100', RAI=1, and MTE=0 to the transponder from the TCAS unit.

Interrogate the transponder with a UF=16 interrogation with UDS=48, MTB=0, CVC=0, VRC=2, CHC=0, HRC=0, VSB=7.

Show that the transponder sends a DF=16 reply with VDS=48.

Show that the coordination information in the MU field is correctly output on the transponder/TCAS interface.

c. Send ARA='11100000000000', RAC='0100', RAI=0, and MTE=0 to the transponder from the TCAS unit.

DRAFT © 2007 RTCA, Inc.

Interrogate the transponder with a UF=16 interrogation with UDS=48, MTB=0, CVC=2, VRC=0, CHC=0, HRC=0, VSB=13.

Show that the transponder sends a DF=16 reply with VDS=48, ARA='11100000000000', RAC='0100', RAT=0, and MTE=0.

Show that the coordination information in the MU field is correctly output on the transponder/TCAS interface.

d. Send ARA='11100000000000', RAC=0, RAI=0, and MTE=1 to the transponder from the TCAS unit.

Interrogate the transponder with a UF=16 interrogation with UDS=48, MTB=0, CVC=2, VRC=0, CHC=0, HRC=0, VSB=13.

Show that the transponder sends a DF=16 reply with VDS=48, ARA='11100000000000', RAC=0, RAT=0, and MTE=1.

Show that the coordination information in the MU field is correctly output on the transponder/TCAS interface.

e. Send ARA=0, RAC=0, RAI=1, MTE=0 to the transponder from the TCAS unit. This RAI=1 is intended to represent the transition from RAI=0 to RAI=1 indicating the end of ARA='11100000000000' in d, above.

Interrogate the transponder with a UF=16 interrogation with UDS=48, MTB=0, CVC=0, VRC=1, CHC=0, HRC=0, VSB=14.

Show that the transponder sends a DF=16 reply with VDS=48.

Show that the coordination information in the MU field is correctly output on the transponder/TCAS interface.

2.5.4.35 Procedure #35 MU Messages To TCAS (§2.2.22.1.3)

This test verifies that the transponder correctly: 1) accepts UF=16 interrogations with MU data containing a TCAS Resolution Message (UDS=48) and passes all necessary information to the TCAS unit; 2) accepts UF=16 broadcast interrogations with MU data containing a TCAS Broadcast Message (UDS=50) and passes all necessary information to the TCAS unit; 3) does not transfer the MU data of UF=16 discrete interrogations with UDS≠48 and broadcast interrogations with UDS≠50 to the TCAS unit.

a. Interrogate the transponder with a valid UF=16 TCAS Coordination Message (UDS1=3, UDS2=0). Verify that the transponder replies with a valid DF=16 Coordination Reply Message and the data content of the MU field is correctly output on the transponder/TCAS interface.

b. In one second, interrogate the transponder with ten UF=16 interrogations, each containing a TCAS Broadcast Message (UDS1=3, UDS2=2, and interrogation address all ONEs), each containing a unique “own” Mode S address (i.e., ten different Mode S addresses). Verify that the MU data for each interrogation is correctly output on the transponder/TCAS interface.

DRAFT © 2007 RTCA, Inc.

c. Interrogate the transponder at the rate of 10 per second or less with 255 UF=16 interrogations addressed to the transponder with UDS values from 0 to 255 except for UDS=48. Verify that the transponder does not output the messages over the transponder/TCAS interface.

d. Interrogate the transponder at the rate of 10 per second or less with 255 UF=16 broadcast interrogations with UDS values from 0 to 255 except for UDS=50. Verify that the transponder does not output the messages over the transponder/TCAS interface.

2.5.4.36 Procedure #36 Transponder Replies to Incoming TCAS Resolution Messages (§2.2.22.2.1)

This test verifies that (1) whenever the transponder replies with a valid Coordination Reply Message to an incoming TCAS Resolution Message, the incoming message is successfully delivered to the TCAS unit; and (2) whenever the transponder's internal queue is full or some other condition is present which would prevent delivery of the message to TCAS, the transponder does not reply with a valid Coordination Reply Message to an incoming TCAS Resolution Message and does not pass the incoming data to TCAS.

a. Interrogate the transponder with a UF=16 interrogation containing a valid TCAS Resolution Message when all of the following conditions are true: the transponder is reporting that it has an operational TCAS; no transponder queues are full; and no TCAS failure conditions exist.

   Demonstrate that the transponder transmits a valid Coordination Reply Message and that the incoming coordination information is correctly output on the transponder/TCAS interface.

b. Interrogate the transponder with a UF=16 interrogation containing a valid TCAS Resolution Message when the transponder queue is full. Demonstrate that the transponder does not send a valid Coordination Reply Message and does not output the incoming coordination information on the transponder/TCAS interface.

   Demonstrate that when the queue is full the transponder still replies to interrogations that do not contain information directed to the transponder/TCAS interface.

c. Interrogate the transponder with a UF=16 interrogation containing a valid TCAS Resolution Message when a TCAS failure condition is present (the transponder is reporting no resolution advisory capability).

   Demonstrate that the transponder does not send a valid Coordination Reply Message and does not output the incoming coordination information on the transponder/TCAS interface.

   Demonstrate that when a TCAS failure is present the transponder still replies to interrogations that do not contain information directed to the transponder/TCAS interface.

DRAFT © 2007 RTCA, Inc.

Note: *When the transponder does not send a valid reply, it may either send no reply or send a DF=16 interrogation with all 56 bits of the MV field equal to ZERO.*

2.5.4.37 Procedure #37 Transponder/TCAS Throughput (§2.2.22 b and g)

This test verifies that the interrogation input rate requirement and the reply rate limiting requirement referenced above are met by the transponder. In addition, this test is important for demonstrating that the transponder's internal structures (e.g., queues, timing) have been designed in such a way that they are compatible with any TCAS unit with which the transponder is paired.

a. Interrogate the transponder with UF=16 interrogations for 5 seconds at a continuous rate of 16.6 milliseconds, i.e., 60 interrogations per second.

   Demonstrate that the transponder accepts all interrogations, transmits a valid reply to each interrogation, and correctly outputs the information on the transponder/TCAS interface in the order that it was received by the transponder.

b. Interrogate the transponder with UF=16 interrogations for 5 seconds at a rate greater than that at which the transponder can accept all interrogations.

Note: *In some installations, interrogating at a high rate with all UF=16 interrogations causes the transponder's internal queue to fill, thus stopping the transponder's acceptance of and reply to interrogations because of the full queue, rather than because of the reply rate limiting. If this is the case, it is necessary to interrogate the transponder with a mix of short and long interrogations; this mix should include the largest number of UF=16 interrogations that is possible while at the same time avoiding any queue overflow. This will allow the reply rate limiting feature to be tested.*

   Demonstrate that the reply rate limiting feature is exercised (i.e., there is a mechanism which recognizes the high interrogation rate and stops the transponder from accepting and replying to replies before the transponder overheats or otherwise becomes adversely affected).

   Demonstrate that the transponder can accept and reply to at least the number of interrogations specified in §2.2.13.3.1.c.

   Demonstrate that for each accepted interrogation, and <u>only</u> for each accepted interrogation, the transponder transmits a valid reply and correctly outputs the information on the transponder/TCAS interface in the order that it was received by the transponder.

c. Interrogate the transponder with UF=16 interrogations at a burst rate greater than that which the transponder can accept. Maintain the burst scenario for at least 5 seconds.

Note: *Burst interrogations must be used to insure that the TCAS interface has not failed due to lack of periodic data updates.*

DRAFT © 2007 RTCA, Inc.

Cause the TCAS test unit to accept information from the transponder at the slowest rate possible including a retry while still conforming to the transponder/TCAS interface protocols.

Demonstrate that for each accepted interrogation, and only for each accepted interrogation, the transponder transmits a valid reply and correctly outputs the information on the transponder/TCAS interface in the order that it was received by the transponder.

2.5.4.38 Procedure #38 Transponder Communication Timing (§2.2.22.2.4)

This test verifies that the communications timing requirement specified in §2.2.22.2.4 is met.

a. Demonstrate that the elapsed time from the transponder's receipt of an incoming UF=16 interrogation containing a TCAS Resolution Message to the receipt by the TCAS test unit from the TCAS/transponder interface is less than or equal to 0.01 second.

Note: *This assumes an interrogation rate less than or equal to 60 interrogations per second.*

2.5.4.39 Procedure #39 TCAS Crosslink (§2.2.14.4.13, §2.2.14.4.7, and §2.2.18.2.10)

This test verifies that the transponder (1) correctly reports the Crosslink Capability (CC) in DF=0 replies, and (2) decodes the DS field in UF=0 interrogations and correctly responds with the contents of the ground initiated Comm-B register in the MV field of the corresponding DF=16 reply.

a. Interrogate the transponder with UF=0, RL=0 interrogations. Verify that the CC field (bit 7) is a one in each DF=0 reply requested.

b. Generate data for each defined ground-initiated Comm-B message for each of the Comm-B registers that can be controlled via an interface or are internal to the transponder. The data content for each register should be unique so that it can be distinguished from all others. Interrogate the transponder with UF=0, RL=1, and all combinations of DS (1-255). Verify that the contents of the MV field of each DF=16 reply (whose register could be loaded with a test message) matches the contents of the corresponding Comm-B register requested.

During the Comm-B protocol test procedure (Procedure #18) or as an extension of the above test, use a TCAS Crosslink type interrogation to extract the ground-initiated Comm-B registers in order to verify the Crosslink protocol operates and correctly reports the proper ground-initiated Comm-B data as the transponder changes Comm-B protocol state (if done as part of Procedure #18, interrogate with UF=0, RL=1, DS = 1 -255 when interrogating with ground MB extraction).

DRAFT © 2007 RTCA, Inc.

3 INSTALLED EQUIPMENT PERFORMANCE

3.1 Equipment Installation

3.1.1 Equipment Accessibility

Equipment controls and display(s) installed for in-flight operation **shall** be readily accessible from the normal seated position. The appropriate operator/crew members(s) **shall** have an unobstructed view of the display(s) when in the normal sitting position.

3.1.2 Inadvertent Turn Off

Appropriate controls **shall** be provided with adequate protection against inadvertent turn off.

3.1.3 Displays

All installed system displays **shall** be readily visible and readable from the crew member's normal position in all ambient lighting conditions for which system use is required.

Note: *Visors, glareshields or filters may be an acceptable means of obtaining daylight visibility.*

3.1.4 Aircraft Power Source

The voltage and voltage tolerance characteristics of the equipment **shall** be compatible with the aircraft power source of appropriate category as specified in RTCA/DO-160D.

3.1.5 Transmission Line(s)

The transmission line(s) connecting antenna(s) and transponder(s) **shall** have impedance, power handling and loss characteristics in accordance with the equipment manufacturer's specifications.

3.1.6 Antenna Location

a. Single Antenna

The antenna **shall** be installed on the bottom of the aircraft as close to the longitudinal axis of the aircraft as possible.

b. Diversity Transponder Installation

The top and bottom antennas **shall** be mounted as near as possible to the center line of the fuselage. Antennas **shall** be located so as to minimize obstruction to their fields in the horizontal plane.

DRAFT © 2007 RTCA, Inc.

Recommendation: *The horizontal distance between the top and bottom antennas should not be greater than 7.6 meters.*

Note: *This recommendation is intended to support the operation of any diversity transponder (including cables) with any diversity antenna installation and still satisfy the requirement of §3.1.6 c.*

c. Reply Delay of Diversity Transponders.

The total two-way transmission difference in mean reply delay between the two antenna channels (including the differential delay caused by transponder-to-antenna cables and the horizontal distance along the aircraft centerline between the two antennas) **shall** not exceed 0.130 microseconds for interrogations of equal amplitude. This requirement **shall** hold for interrogation signal strengths between MTL +3 dB and -21 dBm. The jitter requirements on each individual channel **shall** remain as specified for non-diversity transponders (see §2.2.4.2.5).

Note: *This requirement limits the total apparent jitter caused by antenna switching and by cable and antenna location delay differences.*

3.1.7 Mutual Suppression

If other equipment is installed in the aircraft operating at or near 1030 and 1090 MHz, such as DME, the need for mutual suppression **shall** be determined. When mutual suppression is used, the requirements of §2.2.11 **shall** be met.

3.2 Conditions of Test

The conditions of test stated in the following subparagraphs are applicable to the equipment tests specified in Subsection §3.3. Ground tests may be used for all tests specified.

3.2.1 Power Input

Tests may be conducted using either the aircraft's electrical power distribution system or an appropriate external power supply.

3.2.2 Interference Effects

With the equipment energized from the aircraft's electrical power generating system, individually operate each of the other electrically operated aircraft equipment and systems to determine that no significant conducted or radiated interference exists. Evaluate all reasonable combinations of control settings and operating modes. Operate communication and navigation equipment on at least the low, high and one mid-band frequencies. If appropriate, repeat tests using emergency power source(s).

DRAFT © 2007 RTCA, Inc.

3.2.3 Environment

During the tests, the equipment **shall** not be subjected to environmental conditions that exceed those in RTCA/DO-160D as specified by the equipment manufacturer.

3.2.4 Adjustment of Equipment

Circuits of the equipment under test **shall** be properly aligned and otherwise adjusted in accordance with the manufacturer's recommended practices prior to application of the specified tests.

3.2.5 Warm-up Period

Unless otherwise specified, all tests **shall** be conducted after a warm-up period of not more than 15 minutes.

3.2.6 Radiation Pattern

The antenna **shall** have a radiation pattern which is essentially omnidirectional in the horizontal plane and have sufficient vertical beamwidth to assure proper equipment operation during normal aircraft maneuvers.

3.3 Test Procedures for Installed Equipment Performance

The test procedures set forth below are considered satisfactory in determining required installed equipment performance. Testing requirements are stated, in a manner that will make maximum use of bench test data while limiting flight tests to those requirements which cannot be tested conveniently by other means. Although suggested test procedures are cited, it is recognized that other methods may be preferred by the installing activity. These alternate procedures may be used if the installing activity can show that they provide at least equivalent information. In such cases, the procedures cited herein should be used as one criterion in evaluating the acceptability of the alternate procedures.

Installed equipment performance tests confirm surveillance functions. Data link functions will be dealt with in a future document.

Current U.S. operating regulations require tests similar to those described herein be performed bi-annually to ensure against deterioration of performance. Since equipment installation requires initial performance of these tests, they are included herein.

3.3.1 Conformity Inspection

Visually inspect the installed equipment to determine the use of acceptable workmanship and engineering practices. Verify that all mechanical and electrical connections have been made properly and that the equipment has been installed and located in accordance with the manufacturer's recommendations.

DRAFT © 2007 RTCA, Inc.

3.3.2 Bench Tests

The equipment **shall** have been tested and certified by the equipment manufacturer to demonstrate compliance with the minimum requirements stated in Section §2.0.

The transponder tests required below may be conducted using portable test equipment.

3.3.3 Reply Frequency

Interrogate the installed transponder and verify that the reply frequency of the system is 1090 ±3 MHz for aircraft operating below 15,000 feet, or 1090, ±1 MHz for aircraft operating above 15,000 feet.

3.3.4 Framing Pulse Spacing

Verify that the time interval between the leading edges of the two framing pulses is 20.3 ±0.10 microseconds.

3.3.5 Reply Codes

a. Verify that all Mode 3/A reply pulses listed below are present.

Pulse	Position (microseconds)	4096 code for this pulse only
F1	0.00	
C1	1.45	0010
A1	2.90	1000
C2	4.35	0020
A2	5.80	2000
C4	7.25	0040
A4	8.70	4000
B1	11.60	0100
D1	13.05	0001
B2	14.50	0200
D2	15.95	0002
B4	17.40	0400
D4	18.85	0004
F2	20.30	
SPI	24.65	

DRAFT © 2007 RTCA, Inc.

b. Interrogate the transponder a sufficient number of times to verify that the correct 4096 code is transmitted. Use more than one 4096 code.

3.3.6 Pressure Altitude Transmissions

a. Verify that the transponder response to Mode C interrogations consists only of framing pulses F1 and F2. If complete altitude reporting capability is provided, the altitude digitizer may not be connected to the transponder at the time of the test.

b. Verify that the transponder response to Mode C interrogations consists of only framing pulses F1 and F2 with the altitude switch in the "OFF" position.

3.3.7 Altitude Reporting Test

a. A sufficient number of test points **shall** be checked to ensure that the altitude reporting equipment and transponder perform their intended function through their entire range while ascending or descending. Tests of each altitude code segment of the encoder (2300, 2500, 3800, 4300, 4800, 6800, 14,800 and 30,800 if available) are sufficient to ensure proper operation of each altitude code segment of the encoder.

b. Verify that the correspondence value of the altimeter system is 125 feet or less.

3.3.8 Reply Pulse Width

Verify that the duration of the F1 and F2 pulses between the 0.5 amplitude points on the leading and trailing edge is 0.45, ±0.10 microsecond with the transponder replying on Mode 3/A, code 0001, and code 7477.

3.3.9 Receiver Sensitivity

a. Verify that for ATCRBS interrogations the receiver sensitivity of the system at the antenna end of the transmission line is -73, ±4 dBm.

b. Verify that for Mode S P_6 type interrogations the sensitivity of the equipment at the antenna end of the transmission line is -74 dBm, ±3 dB.

3.3.10 Transmitter Power Output

a. Verify that transponders operating at altitudes above 15,000 feet and/or at normal cruising speeds in excess of 175 knots have a peak pulse power at the antenna end of the transmission line of at least +21 dBW and not more than +27 dBW.

b. Verify that transponders intended for operation at altitudes not above 15,000 feet have a peak pulse power at the antenna end of the transmission line of at least +18.5 dBW and not more than +27 dBW.

DRAFT © 2007 RTCA, Inc.

3.3.11 Mode S Address

Verify that the 24-bit discrete address transmitted in the Mode S squitter is the Mode S address that has been assigned to this aircraft. (See Advisory Circular 20-131A for information regarding Mode S address assignment.)

3.3.12 Received Reply

Interrogate the equipment with its discrete address and verify received reply.

3.3.13 Airspeed Fixed Field

Interrogate the equipment to confirm the maximum airspeed report.

3.3.14 On-the-Ground Condition

Verify that the equipment correctly reports the "on-the-ground" condition. If it is feasible to simulate the airborne condition, verify that the equipment correctly reports an "airborne" condition.

Also verify that when the unit is in the "inhibit replies" condition (see §2.1.7.b), the transponder continues to generated Mode S squitters and replies to discretely-addressed Mode S interrogations (UF=0, 4, 5, 16, 20, 21, 24), but does not reply to ATCRBS, ATCRBS/Mode S All-Call or Mode S-Only All-Call interrogations.

If the unit is not in the "inhibit replies" condition verify that the transponder continues to generate Mode S squitters and to reply to ATCRBS, ATCRBS/Mode S All-C all or Mode S-Only All-Call and discretely-addressed Mode S interrogations (UF=0, 4, 5, 16, 20, 21, 24).

3.3.15 Diversity Antenna Installations

Verify that the antennas on the aircraft are no more than 7.6 meter (25 feet) apart in the horizontal plane. The cables **shall** be essentially of equal electrical length.

3.4 Flight Test Procedures

This guidance material offers examples of flight test procedures for demonstration of selected performance functions. Flight demonstration of installed performance may be required by the aircraft operator or by airworthiness inspection agencies.

A schedule must be arranged with the area air traffic control facility so that a controller is available to observe the transponder reply and communicate with the test aircraft to confirm performance of the transponder.

Select a test area such that line-of-sight signal propagation is assured. Test maneuvers may include standard rate turns through 360 degrees, climbs and descents so that ATC

DRAFT © 2007 RTCA, Inc.

can confirm valid return through normal flight attitudes. Verification of Ident codes selected and reported altitude response to Mode C should be checked.

DRAFT © 2007 RTCA, Inc.

Membership

RTCA Special Committee 209
Minimum Operational Performance Standards
for
Mode S Airborne Beacon & Data Link System

Co-Chairs

Thomas Pagano	FAA Technical Center
Robert Saffell	Rockwell Collins

Secretary

Gary Furr	L-3 Communications, The Titan Group

Members and Advisors

Lt. Joseph Adelmann	U.S. Air Force
Dominic Anello	DoD AIMS Program Office
Mark Annee	U.S. Navy
Raymond Bayh	BAE Systems
Woody Bode	Freestate Electronics
William Brodegard	Avidyne Corp
Mark Cato	Air Line Pilot Association
Robert Clarke	Alion Sciece
Thomas Conklin	U.S. Air Force
Andy Davis	Trig Avionics Ltd.
John Doughty	Garmin International
Robert Duffer	Federal Aviation Administration
Dick Eckert	ITT
Douglas Edsall	U.S. Army
John Fisher	U.S. Air Force
Robert Grappel	MIT Lincoln Lab
Douglas Guetter	L-3 Communications, ACSS
Ron Harris	Freestate Electronics
Vic Hunsicker	DoD AIMS Program Office
Andrew Leone	Federal Aviation Administration
Angela Leurs	EuroAvionics Navigation System GmbH
Robert Manning	L-3 Communications
Peter Markus	Federal Aviation Administration
Scott Moore	Northern Airborne Technology Ltd.
Tom Mulkerin	Mulkerin Associates Inc.
Peter Muraca	Federal Aviation Administration
Miles Muramuto	U.S. Air Force
Jack Oehme	U.S. Air Force
Richard Olson	Federal Aviation Administration
Michael Penner	Avidyne Safety Systems Group
Eric Potier	Eurocontrol

DRAFT © 2007 RTCA, Inc.

Blane Rasch	U.S. Air Force
Jeffrey Robinson	U.S. Air Force
Dean Ryan	Avidyne Corporation
Stuart Searight	Federal Aviation Administration
Gu Shimin	CARERI, Shanghai China
Peter Skaves	Federal Aviation Administration
Boris Stallings	U.S. Navy
William Thedford	Consultant, U.S. Air Force
John Van Dongen	Federal Aviation Administration
Nolan Van Foeken	Garmin International
Leo Wapelhorst	L-3 Communications, The Titan Group

DRAFT © 2007 RTCA, Inc.