RTCA Special Committee 209

ATCRBS / Mode S Transponder MOPS Maintenance

In Joint Teleconference and WebEx Session
9 December 2010
9:00am EST (New York)

Test of Garmin Mode S Transponder Acceptance of Mode S Interrogations Generated with an IQ Modulator

Kurt Schueler
Garmin International

SUMMARY
Garmin performed tests as requested by SC-209/WGG-49 co-chairs. The results are presented.

Introduction:

During SC-209/WG-49 Meeting #12, it was decided to request that Mode-S and TCAS Transponder manufacturers check the DPSK SPR and P5 detection capabilities for phase reversals produced by IQ modulation techniques. The results of testing a Garmin GTX 33 transponder are presented in this paper. The GTX 33 transponder is representative of all Garmin's current Mode S transponders.

Discussion:

The testing of the GTX 33 was done using the following equipment:

1. GTX 33 S/N 84801152
2. Aeroflex SDX 2000 EID 5432
3. Tektronix RSA 3408A – Real Time Spectrum Analyzer (RTSA) EID 4641
4. Agilent MXG Vector Signal Generator N5182A EID 5186
5. 10 dB attenuator attached to the output of the MXG
6. A circulator configured as an isolator to feed the signal out of the MXG's attenuator into a second circulator.
7. The second circulator configured to feed the MXG's attenuated signal to the UUT and to feed the UUT's reply back towards the RTSA.
8. 40 dB of attenuation attached between the second circulator and the RTSA

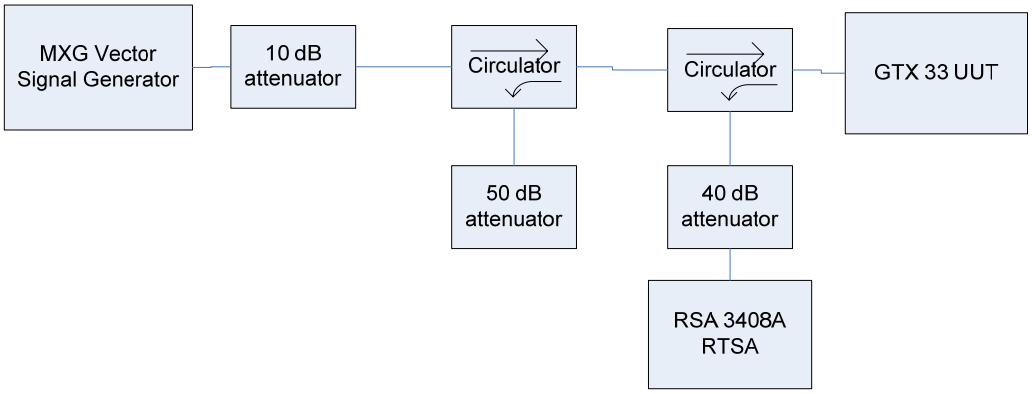

Figure 1 Primary test setup

Test Procedure / Results:

1. The MTL was determined using the SDX 2000 to be -75.7 dBm at the connector of the transponder. The RTSA was used to help correct to the end of the cable.
2. A matlab program was written to create data for the MXG. The program produced a baseband version of the interrogation which would generate the 180 degree phase shift at constant amplitude and with 80 ns between the 10 and 170 degree points. The phase shift has a constant rate of phase change from 0 to 180 degrees. The test interrogation from the MXG was fed into the RTSA in order to calibrate the power of the test interrogation. The RTSA was also used to verify the phase change rate. It was measured to go from 14.2 degrees to 170.2 degrees in 78.125 ns. This verified that the 10 to 170 degree time is very close to 80 ns.

3. The RTSA was also used to verify the power drop of the phase reversals. The peak to peak variation in the amplitude around the phase reversals was less than 1.5 dB.
4. The interrogation was created without the P5 at the following power levels. At least 100 interrogations were performed at every listed power level and every interrogation resulted in a reply (rather than just checking for detection of a phase reversal we checked that it actually replied):

    -72.7 dBm
    -62.7 dBm
    -52.7 dBm
    -42.7 dBm
    -32.7 dBm
    -22.7 dBm
    -21.0 dBm

5. The program was adjusted to produce interrogations that included a P5 which is 3 dB above P6. The program included an input which adjusted the phase relationship between P5 and P6. At every power level listed in step 4, multiple interrogations were produced for every P5/P6 phase relationship in 3 degree steps (for a total of 360/3=120 steps).
6. None of the interrogations were replied to. This confirmed that the transponder would not reply when properly suppressed by a P5 that is 3 dB greater than P6 at virtually any phase angle.
7. As noted this was attempted at all power levels in step 4.
8. The program was adjusted to produce interrogations that included a P5 which is 12 dB below P6. The program still included an input which adjusted the phase relationship between P5 and P6. At every power level listed in step 4, a single interrogation was produced for every P5/P6 phase relationship in 3 degree steps (for a total of 360/3=120 steps).
9. Every interrogation was replied to. This confirmed that the transponder would reply when the P5 is at least 12 dB less than the P6 at virtually any phase angle.
10. As noted this was attempted at all power levels in step 4.

Given that the UUT always replied when expected to and always failed to reply when expected not to, the GTX 33 passed this style of test. It is noted that using a full interrogation and verifying replies goes beyond the requirements of the requested test procedure. This does not imply that Garmin feels the test procedure should be changed.

It should also be noted that Garmin's method of simulating a non-coherent phase relationship between P5 and P6 was to vary the phase relationship in a uniform manner. Again, this does not imply that Garmin feels the test procedure should be changed.