RTCA Special Committee 209 / EUROCAE WG49

ATCRBS / Mode S Transponder MOPS Maintenance

Joint Meeting #11

RTCA Headquarters, Washington, DC
8 – 10 September 2010

Comm-B extraction using DI=3
Review of specification
and
Proposal for additional test procedures

Eric Potier
EUROCONTROL

SUMMARY

This Working Paper is provided in response to **Action Item 10-07**.

During the SC-209/WG-49 Meeting 10 in Paris, it was agreed to incorporate additional tests of Comm-B extraction using the DI=3 format.

This Working Paper reviews the different sections from RTCA DO-181D and EUROCAE ED-73C where the extraction using DI=3 should be clearly described and proposes additional tests of register extraction using DI=3.

1. Introduction

A transponder register is accessed by defining its BDS number. The BDS number is divided into two parts: BDS1 for the MSB and BDS2 for the LSB. For example for the register accessed by BDS=17, BDS1= 1 and BDS2=7.

When BDS2= 0 it is only necessary to specify the BDS1 using the RR field in the interrogations.

To extract a register with a BDS2 ≠ 0, in addition to the BDS1 value, it is necessary to specify the BDS2 value in a sub-field named RRS. There are two DI values that identify a RRS sub-field in the SD field coding. These values are DI=3 or DI=7. DI=7 is used with an II code. DI=3 is used with an SI code.

Some transponders have been seen not using the provided BDS2 value and just replying with the corresponding register with BDS2 = 0 when interrogated with DI=3.

A first check of the transponder MOPS has shown that the transponder MOPS correctly specified the RRS field in DI=3 however **WP10-15** has indicated that, with the exception of the test procedure in §2.6.6.5 Part 5: Data Mix #1 part b., all test procedures that extract extended data use the DI value of 7.

This Working Paper reviews the different sections from RTCA DO-181D and EUROCAE ED-73C where the requirements for Comm-B extraction using DI=3 should be clearly described and proposes additional tests of register extraction using DI=3. This Working Paper also points out other DI=3 inconsistencies found when reviewing the two MOPS documents.

2. Review of register extraction requirements using DI=3

2.1 Description of normal Comm-B protocol

DO-181D transponder MOPS specifies the SD format in §2.2.19.2.1 and ED-73C in §3.23.2.1 as follows:

DO-181D	ED-73C
2.2.19.2.1 Multisite Data Formats 2.2.19.2.1.1 Subfields in SD The SD field contains information as follows: … d. If the DI=7: RRS: Reply Request, subfield in SD, 4 bits, 21 through 24. Coding: Corresponding to the requested BDS2 code. (See note in §2.2.14.4.34). e. … f. If the DI=3: SIS: The 6-bit (bits 17 – 22) surveillance identifier subfield in SD shall contain an assigned SI code of the interrogator (see §2.2.14.4.36).	3.23.2.1 Multisite Data Formats a. Subfields in SD The SD field contains information as follows: … (4) If the DI code = 7: RRS The 4-bit (21-24) reply request subfield in SD shall give the BDS2 code of a requested COMM-B reply. (Refer to paragraph 3.23.1.12 a, and NOTE in paragraph 3.18.4.32) (5) … (6) If the DI code = 3: SIS The 6-bit (17-22) surveillance identifier subfield in SD shall contain an assigned SI code of the interrogator (3.18.4.34).

DO-181D	ED-73C
LSS: The 1-bit (bit 23) lockout surveillance subfield if set to ONE shall signify a multisite lockout command from the interrogator indicated in SIS. LSS set to ZERO shall be used to signify that no change in lockout state is commanded. RRS: This 4-bit (bits 24 – 27) reply request subfield in SD shall be coded as specified in subparagraph d.	LSS The 1-bit (23) lockout surveillance subfield if set to ONE shall signify a multisite lockout command from the interrogator indicated in SIS. LSS set to ZERO shall be used to signify that no change in lockout state is commanded. RRS The 4-bit (24-27) reply request subfield in SD shall give the BDS2 code of a requested COMM-B reply. (Refer to paragraph 3.23.1.12 a, and NOTE in paragraph 3.18.4.32.)
	3.23.1.12 Comm-B Protocol (Figure 3-18) Comm-B is the transmission of information from the aircraft to the ground and follows the general protocol as outlined in paragraph 3.2.g. Figure 3-18 is a flow chart containing the ground-initiated Comm-B readout, the procedures for air-initiated Comm-B transactions and the multisite procedures. a. Comm-B data selector, BDS The 8-bit BDS code shall determine the register whose contents shall be transferred in the MB field of the Comm-B reply. It shall be expressed in two groups of 4 bits each, BDS1 (most significant 4 bits) and BDS2 (least significant 4 bits). (1) BDS1 Code The BDS1 Code shall be as defined in the RR field of a surveillance or Comm-A interrogation. (2) BDS2 Code The BDS2 code shall be as defined in the RRS subfield of the SD field when DI = 7 or 3. If no BDS2 code is specified (i.e. DI is not equal to 7 nor 3) it shall signify that BDS2 = 0.
2.2.14.4.34 RR Reply Request … *Note: If the first bit of the RR Code is ONE, the last four bits of the 5-bit RR Code, if transformed into their decimal equivalent, designate the number (BDS1) of the requested source. BDS2 is assumed to be ZERO if not specified by DI=3 or 7 and RRS, as is consistent with §2.2.19.1.12.1. The data can also be extracted using the protocol of §2.2.19.1.12.2.*	3.18.4.32 Reply Request RR … *NOTE: If the first bit of the RR code is ONE, the last four bits of the 5-bit RR code, if transformed into their decimal equivalent, designate the number (BDS1) of the requested source. BDS2 is assumed to be ZERO if not specified by DI=3 or 7 and RRS. See paragraph 3.23.2.1 a(4).*

The description of SD field and BDS1/BDS2 correctly specified that BDS2 is contained in the RRS sub-field for DI=7 and DI=3 format.

However, DO-181D, §2.2.19.1.1.12.1 states:

DO-181D	ED-73C
2.2.19.1.12.1 Data Source Designators When Comm-B information to be transmitted resides in data sources that are part of the Mode S installation, the data sources shall be identified by the BDS code of §2.2.14.4.20.b. The interrogator uses the RR field of surveillance and Comm-A interrogations to designate the BDSI of the data source from which the reply should originate. BDS1 is represented by the last 4 bits (bits 10 – 13) of the received RR code (see §2.2.14.4.34). If the DI code of the Comm-B requesting interrogation is not equal to 7, the BDS2 code of the desired reply source shall be "0." 2.2.19.1.12.2 Extended Data Source Designators The interrogator can request data to be read out from a source more specifically defined by both BDS1 and BDS2. The readout is initiated by transmitting, in addition to the BDS1 code in RR, the BDS2 code in the SD field. See §2.2.19.2.1.1 for definitions of subfields in SD.	

Issue: The last sentence in 2.2.19.1.12.1 is not true, DI=3 shall also be taken into account.

Proposal:

To change DO-181D, §**2.2.19.1.12.1 Data Source Designators** as follows:

> When Comm-B information to be transmitted resides in data sources that are part of the Mode S installation, the data sources shall be identified by the BDS code of §2.2.14.4.20.b. The interrogator uses the RR field of surveillance and Comm-A interrogations to designate the BDS1 of the data source from which the reply should originate. BDS1 is represented by the last 4 bits (bits 10 – 13) of the received RR code (see §2.2.14.4.34).
>
> If the DI code of the Comm-B requesting interrogation is not equal to 3 nor 7, the BDS2 code of the desired reply source shall be "0."

2.2 Protocol for Comm-B Broadcast

DI=3 is not mentioned in DO-181D, §2.2.19.1.12.5 or ED-73C, §3.23.1.12 Comm-B Broadcast. This is however possible to extract a Comm-B Broadcast with DI=3.

DO-181D	ED-73C
2.2.19.1.12.5 Comm-B Broadcast *Note: A Comm-B broadcast is a message directed to all active interrogators in view. Messages are alternately numbered 1, 2 and are available for 18 seconds unless a waiting air-initiated Comm-B interrupts the cycle. Interrogators have no means to cancel the Comm-B broadcast.* A Comm-B broadcast starts, when no air-initiated Comm-B transaction is in effect, with the insertion of DR codes 4, 5, 6 or 7 into downlink transmissions of DFs 4, 5, 20, 21 and with the starting of the B-timer. On receipt of the above DR codes, interrogators may extract the broadcast message by transmitting RR=16 with DI≠7 or with DI=7 and RRS=0 in subsequent interrogations. When the B-timer runs out after 18 ±1 seconds, the transponder will reset the DR codes as required, will discard the previous broadcast message and change from 1 to 2 (or vice versa) the broadcast message number. …	3.23.1.12 Comm-B Protocol (Figure 3-18) d. Comm-B Broadcast *NOTE: A Comm-B broadcast is a message directed to all active interrogators in view. Messages are alternately numbered 1, 2 and are available for 18 seconds unless a waiting air-initiated Comm-B interrupts the cycle. Interrogators have no means to cancel the Comm-B broadcast.* A Comm-B broadcast starts, when no air-initiated Comm-B transaction is in effect, with the insertion of DR codes 4, 5, 6 or 7 into downlink transmissions of DFs 4, 5, 20, 21 and with the starting of the B-timer. On receipt of the above DR codes, interrogators may extract the broadcast message by transmitting RR=16 with DI ≠ 7 or with DI=7 and RRS=0 in subsequent interrogations. When the B-timer runs out after 18 ±1 seconds, the transponder will reset the DR codes as required, will discard the previous broadcast message and change from 1 to 2 (or vice versa) the broadcast message number. …

Issue:

Comm-B broadcast can be extracted using DI=3 as specified in DO-181D, Figure 2-20 or ED-73C, Figure 3-18. The text of DO-181D, §2.2.19.1.12.5 / ED-73C §3.23.1.12 d must be adapted.

Proposal:

DO-181D, §2.2.19.1.12.5 Comm-B Broadcast and ED-73, §3.23.1.12 Comm-B Protocol (Figure 3-18) d. Comm-B Protocol should be modified as follows:

> *Note: A Comm-B broadcast is a message directed to all active interrogators in view. Messages are alternately numbered 1, 2 and are available for 18 seconds unless a waiting air-initiated Comm-B interrupts the cycle. Interrogators have no means to cancel the Comm-B broadcast.*
>
> A Comm-B broadcast starts, when no air-initiated Comm-B transaction is in effect, with the insertion of DR codes 4, 5, 6 or 7 into downlink transmissions of DFs 4, 5, 20, 21 and with the starting of the B-timer. On receipt of the above DR codes, interrogators may extract the broadcast message by transmitting RR=16 with DI≠3 or 7, or RR=16 and DI =3 or 7 and RRS=0 in subsequent interrogations. When the B-timer runs out after 18 ±1 seconds, the transponder will reset the DR codes as required, will discard the previous broadcast message and change from 1 to 2 (or vice versa) the broadcast message number.

2.4 AICB

At the contrary multisite AICB should not be allowed with DI=3 as it may consist in several segments and may need a reservation/closeout which is not available with DI=3.

This is confirmed by the following section:

> DO-181D, §2.2.14.4.36 SI Surveillance Identifier [ED-73C, §3.18.4.34]
>
> This 6-bit value shall define a surveillance identifier (SI) code which is derived from the CL and IC fields of UF=11, or received directly in the SIS subfield (see §2.2.19.2.1.1). These SI code values are assigned to interrogators in the range of 1 to 63. An SI value of ZERO will not be used. The SI codes are used with the multisite lockout protocols (see §2.2.18.2.5). The SI codes are not be used with the multisite communications protocols, which require the use of II codes. Therefore, an interrogator operating with an SI code will be limited to the following data link capabilities:
>
> a. Unlinked Comm-A
>
> b. Broadcast Comm-A
>
> c. Ground-Initiated Comm-B (GICB)
>
> d. Broadcast Comm-B
>
> e. TCAS/ACAS Downlink Transactions

The text in DO-181D, §2.2.19.1.12.4, DI=3 and in ED-73C, §3.23.1.12 does not mentioned DI=3.

DO-181D	ED-73C
2.2.19.1.12.4 Air-Initiated Comm-B An air-initiated Comm-B sequence **shall** start upon the acceptance of a message intended for delivery to the ground sensor. After receipt of this message, the transponder **shall** insert codes 1 or 3 in the DR field of a surveillance or Comm-B reply, DF=4, 5, 20, 21. On receipt of this announcement, the interrogator transmits code 16 with DI≠7 or with DI=7 and RRS=0 in the RR field of a subsequent interrogation. Receipt of this code by the transponder **shall** constitute the authorization to transmit the data. The resulting MB field contains a code identifying the content of the field. This reply, and others following it, **shall** continue to contain codes 1 or 3 in the DR field. After the message has been transmitted at least once in response to an interrogation using non-selective protocols (see §2.2.17.2.3.4) and after closeout is received (Code 4 in the PC field) in UF=4, 5, 20, 21, the transaction **shall** be closed out and the DR code belonging to this message immediately removed. Another message waiting to be transmitted can then set the DR code to 1 or 3 so that the reply can contain the announcement of this next message. If RR=16 with DI≠7, or with DI=7 and RRS=0, is received while no message is waiting to be transmitted, the reply **shall** contain all ZEROs in the MB field.	**3.23.1.12 Comm-B Protocol (Figure 3-18)** …… c. Air-Initiated Comm-B An air-initiated Comm-B sequence shall start upon the receipt of a message intended for delivery to a ground interrogator. After receipt of this message, the transponder shall insert codes 1 or 3 as appropriate, in the DR field of a surveillance or Comm-B reply, DF=4, 5, 20, 21. On receipt of this announcement, the interrogator transmits an interrogation with UF = 4, 5, 20 or 21 with RR = 16 and DI ≠ 7 or with RR = 16 and DI = 7 and RRS=0 in a subsequent interrogation. Receipt of this code by the transponder shall constitute the authorization to transmit the data. The resulting MB field contains a code identifying the content of the field. This reply, and others following it, shall continue to contain codes 1 or 3 as appropriate in the DR field. After the message has been transmitted at least once in response to an interrogation using non-multisite protocols (paragraph 3.23.2.3 d) and after closeout is received (e.g. Code 4 in the PC field) in UF=4, 5, 20, 21, the transaction shall be closed out and the DR code belonging to this message immediately removed. Another message waiting to be transmitted will then set the DR code to 1 or 3 as appropriate so that the reply will contain the announcement of this next message. If RR=16 with DI ≠ 7 or with DI=7 and RRS=0 is received while no message is waiting to be transmitted, the reply shall contain all ZEROs in the MB field. This protocol is also used by air-directed Comm-B messages.

Issue:

However, there is a discrepancy with DO-181D, Figure 2-20 and ED-73C Figure 3-18 which authorises the extraction of the content of an AICB using DI=3 see path:

[M] (DI=7 OR DI=3) *yes*
[N] (RRS=0) *yes*
[E] (B register set) *yes*
[G] (b Timer) *yes*,
[B] (DI=1) *no*
[A] (PC=4)

What happens at this point? DO-181D, §2.2.1.4.4.28 PC protocol and ED-73C §3.18.4.26 Protocol PC states:

> … The PC field shall be ignored for the processing of surveillance or Comm-A interrogations containing DI=3 (see DO-181 §2.2.19.2.1.1 - ED-73 3.23.2.1).

Supposing [A](PC=4) will return "no" and the B timer is not running the AICB content will be presented and T will be set indicating that the AICB has been read at least once. However if the B Timer runs [H] will test the IIS which does not exist for a request with DI=3.

Proposal:

In order to not interfere with multisite AICB, to not test PC [A], to not test IIS [H] in case the B timer runs when a DI=3 request is received it is proposed to insert a diamond in Figure 2-20 (ED-73, Figure 3-18) between [E] and [B] to check if DI=3, if "yes" go directly to "present message", if no go to [B].

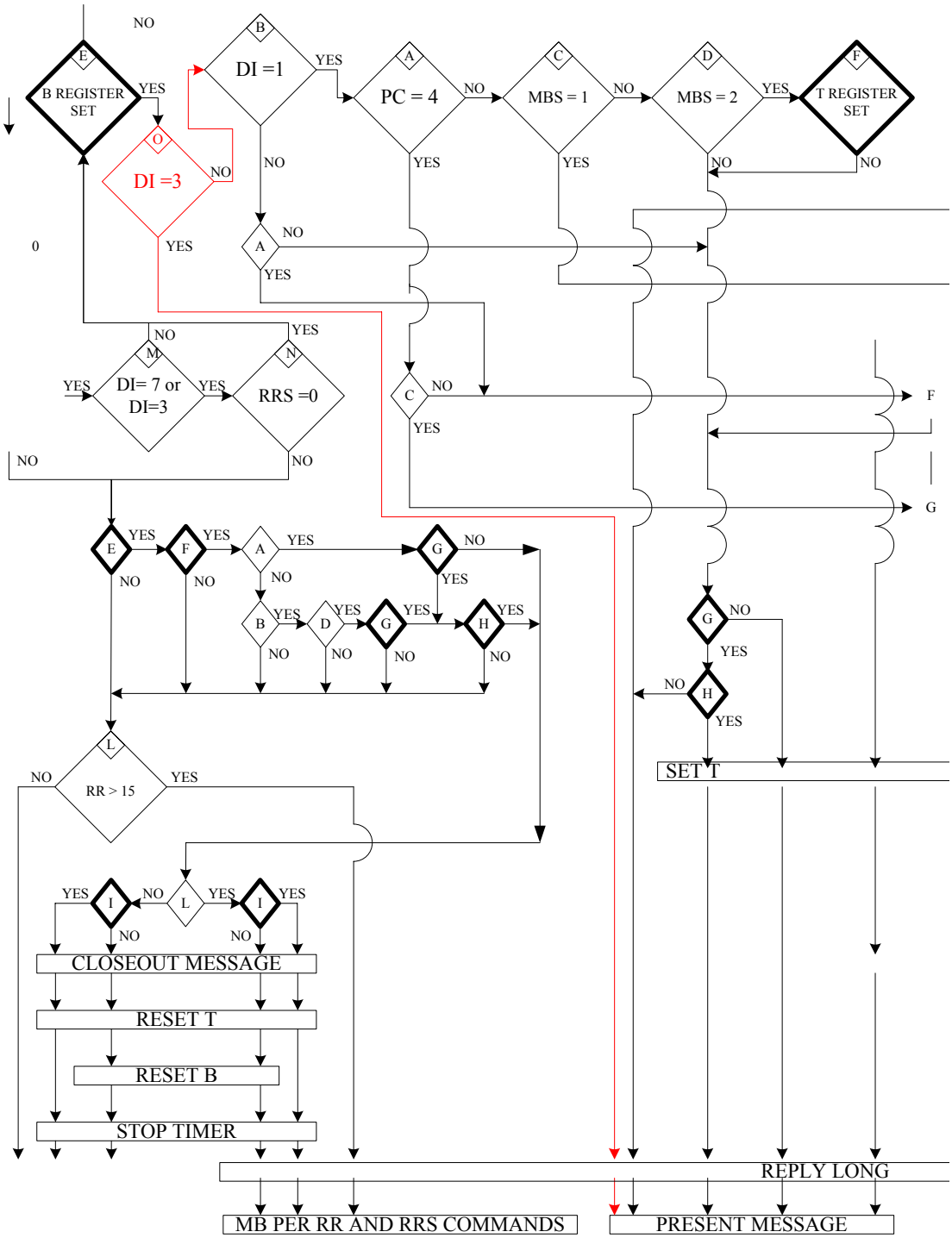
B REGISTER SET
DI =1
PC = 4
MBS = 1
MBS = 2
T REGISTER SET
DI =3
DI= 7 or DI=3
RRS =0
RR > 15
SET T
CLOSEOUT MESSAGE
RESET T
RESET B
STOP TIMER
REPLY LONG
MB PER RR AND RRS COMMANDS
PRESENT MESSAGE
YES
NO
0
F
G

2.4 Extraction of RA report

DO-181D	ED-73C
2.2.22.1.2.1 Air-Initiated Downlink of RA Report 2.2.22.1.2.1.1 Air-Initiated Downlink of RA Report for All Transponder/TCAS Systems The following requirements apply to all transponder/TCAS systems, i.e., both those that are compatible with RTCA/DO-185A/B, and those that are NOT compatible with RTCA/DO-185A/B. Whenever TCAS reports that it has an active Resolution Advisory (RA), the transponder shall indicate that it has an RA Report awaiting downlink by setting the DR field in DF=4, 5, 20, 21 replies to DR=2, 3, 6, or 7 as appropriate. Upon receipt of a DF=4, 5, 20, or 21 reply, with DR=2, 3, 6 or 7, a Mode S sensor may request downlink of the RA Report by setting RR=19 and DI≠7, or RR=19, DI=7 and RRS=0 in a surveillance or Comm-A interrogation (UF=4, 5, 20, or 21) to the TCAS aircraft. When this request is received by own Mode S transponder, own transponder shall reply with a Comm B reply, DF=20, 21, whose MB field contains an RA Report with information previously provided to the transponder by the TCAS equipment.	3.27.1.2 MB Message, Comm-B used by ACAS Airborne equipment shall use the MB field (paragraph 3.18.4.18) of Comm-B replies to transmit a Resolution Advisory Report and a Data Link Capability Report to Mode S sensors. a. Air-Initiated Downlink of Resolution Advisory Report (1) Air-Initiated Downlink of Resolution Advisory Report for all Transponder/ACAS Systems. The following requirements apply to all transponder/ACAS systems, i.e., both those that are compatible with ACAS, and those that are not compatible with ACAS. Whenever ACAS reports that it has an active Resolution Advisory, the transponder shall indicate that it has a Resolution Advisory report awaiting downlink by setting the DR field in DF=4, 5, 20, 21 replies to DR=2, 3, 6 or 7 as appropriate (see paragraph 3.18.4.10). Upon receipt of a DF=4, 5, 20 or 21 reply, with DR=2, 3, 6 or 7, a Mode S sensor may request downlink of the resolution advisory using the GICB protocol and setting RR=19 and DI≠7, or RR=19, DI=7 and RRS=0 in a surveillance or Comm-A interrogation (UF=4, 5, 20 or 21) to the ACAS aircraft. When this request is received by own Mode S transponder, own transponder shall reply with a Comm-B reply, DF=20,21, whose MB field contains a Resolution Advisory Report with information provided previously by the ACAS equipment.

Issue:

An RA report can also be extracted using an interrogation containing RR=19, DI=3 and RRS =0. This is not clearly specified in the transponder MOPS.

Proposal:

Change DO-181D, §2.2.22.1.2.1.1 Air-Initiated Downlink of RA Report for All Transponder/TCAS Systems, and ED-73C, §3.27.1.2 MB Message, Comm-B used by ACAS to read:

> ... setting RR=19 and DI≠7 or 3, or RR=19 and DI=7 or 3 and RRS=0 ....

2.5 Reading of Extended Squitter Register

Issue:

DO-181D, §2.2.23.1.2 and ED-73C, §3.28.2 Extended Squitter Types 5 notes in bullets "a" through "e" state:

> *Note: A GICB request (see §2.2.19.1.12.3) containing RR equals 16, DI equals 7 and RRS equals 5 will cause the resulting reply to contain the airborne position report in its MB field.*

Proposal: to change all 5 notes stating the same thing for each ES register.

> *Note: A GICB request (see §2.2.19.1.12.3) containing RR equals 16, DI equals 7 or 3 and RRS equals 5 will cause the resulting reply to contain the airborne position report in its MB field.*

2.6 Use of PC field for non–selective lockout when DI=3

DO-181 Figure 2-13 and ED-73 Figure 3-11 "Lockout protocol" do not show any restriction on DI values to accept PC=1 to apply a non –selective lockout (see right part of the figure about non-selective lockout.

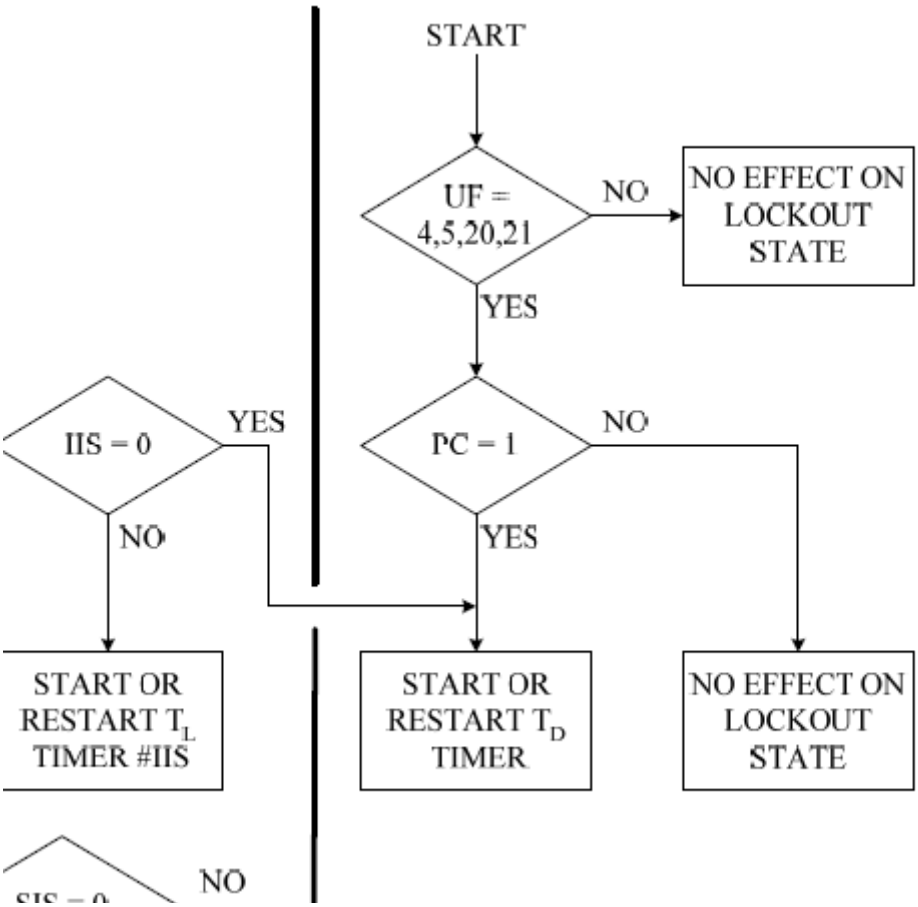

Similarly associated text in ED-73C, §3.22.2.4 and DO-181D, §2.2.18.2.4 does not show any restriction on non-selective lockout

> Non-Selective All-Call Lockout - On acceptance of an interrogation containing code 1 in the PC field or containing LOS=1 together with IIS=0 in the SD field or both of these code sets, the transponder shall start the TD timer. This timer shall run for 18 ±1.0 seconds after the last received command.

This is in contradiction with DO-181D, §2.2.1.4.4.28 PC protocol (ED-73C, §3.18.4.26 Protocol PC) and the associated test in DO-181D, §2.5.4.4.2 (ED-73 §5.5.8.4.b) :

> … The PC field shall be ignored for the processing of surveillance or Comm-A interrogations containing DI=3 (see DO-181 §2.2.19.2.1.1 - ED-73 3.23.2.1).

The meeting is invited either:

1. to confirm that PC=1 shall not be used when DI=3 and to propose modifications to **ED-73, §3.22.2.4 +Figure 3-11 and DO-181D, §2.2.18.2.4 + Figure 2-13** to indicate that PC=1 shall not be used when DI=3.

   > Non-Selective All-Call Lockout - On acceptance of an interrogation containing code 1 in the PC field and DI different from 3 or containing LOS=1 together with IIS=0 in the SD field or both of these code sets, the transponder shall start the TD timer. This timer shall run for 18 ±1.0 seconds after the last received command.

   And add a diamond in ED-73C, Figure 3-11 and DO-181D, Figure 2-13 between the test on UF and PC with a test on DI=3, if "yes" no effect on lockout state, if "no" go to PC=1 test.

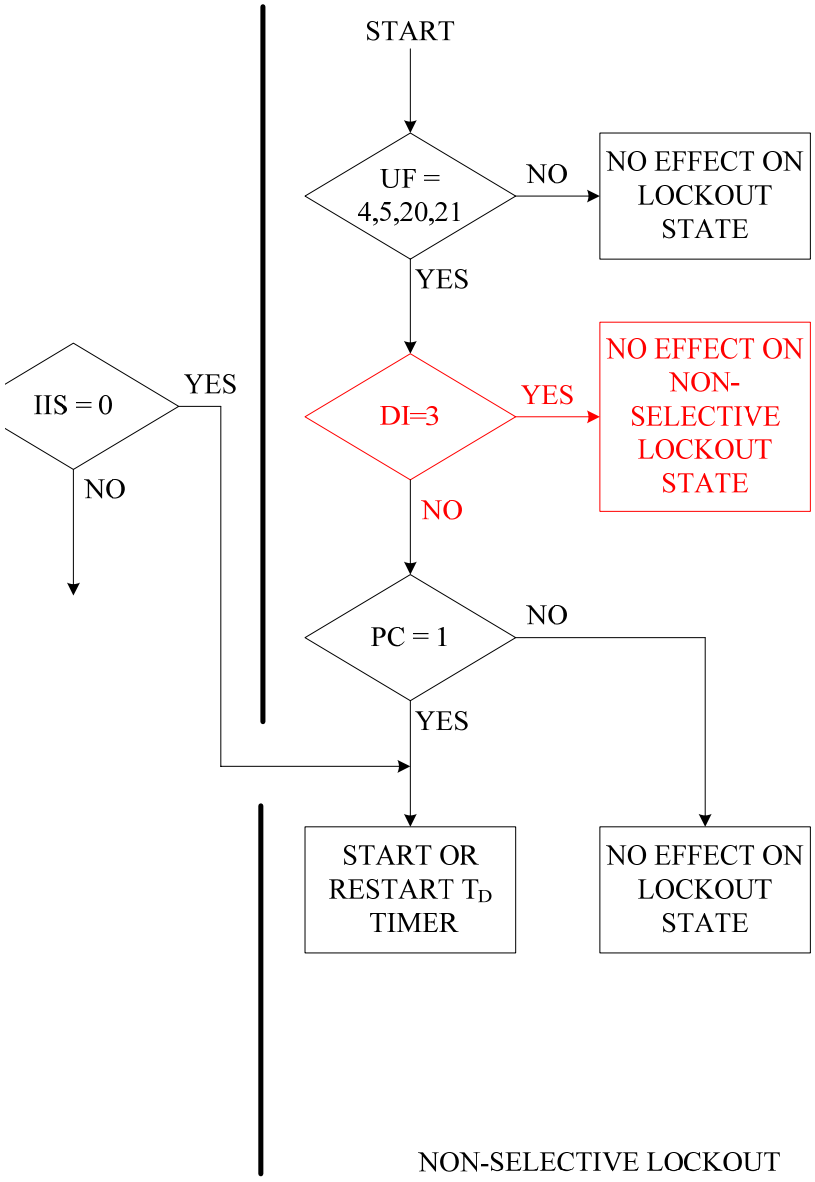
START
UF = 4,5,20,21
NO
NO EFFECT ON LOCKOUT STATE
YES
DI=3
YES
NO EFFECT ON NON-SELECTIVE LOCKOUT STATE
NO
IIS = 0
YES
NO
PC = 1
NO
YES
START OR RESTART T_D TIMER
NO EFFECT ON LOCKOUT STATE
NON-SELECTIVE LOCKOUT

2. Or to accept to handle PC=1 for DI=3 and in this case to modify DO-181D, §2.2.14.4.28 PC protocol and ED-73C, §3.18.4.26 Protocol PC to say

> … If different from 1 the PC field shall be ignored for the processing of surveillance or Comm-A interrogations containing DI=3 (see DO-181 §2.2.19.2.1.1 - ED-73 3.23.2.1).

and remove the associated negative test in Procedure #4 - Non-Selective Lockout Tests DO-181D, §2.5.4.4.2 (ED-73C, §5.5.8.4.b))

> b. Required Negative Tests
>
> (1) PC Discrimination
>
> The interrogation patterns are:
>
> UF = 4, 5, 20, 21.
>
> PC = 0 and DI≠3
>
> PC = 0 and DI=3 and LSS=1 and SIS=0
>
> ~~PC = 1 and DI=3,~~
>
> PC = 2, 3, 4, 5, 6, 7.
>
> Total number of patterns = ~~36~~ 32.

2.6 ELS and SI code requirements

DO-181D	ED-73C
2.2.24.2 Surveillance Identifier (“SI”) Code Requirements 2.2.24.2.1 MOPS Requirements Relevant to “SI” Mode-S Transponders support the requirements of the Surveillance Identifier (”SI”) codes in accordance with the following sections of this document. a. §2.2.14.4.11, “DI” Designator, Identification Field b. §2.2.14.4.17, “II” Interrogator Identification Field c. §2.2.14.4.29, “PI” Parity / Interrogator Identity d. §2.2.14.4.35, “SD” Special Designator and “IIS”, Subfield in “SD” e. §2.2.14.4.9, “CL” Code Label f. §2.2.14.4.15, “IC” Interrogator Code g. §2.2.14.4.36, “SI” Surveillance Identifier h. §2.2.18.2.1, Basic Mode-S Error Protection i. §2.2.18.2.5, “Multisite Lockout Protocol” j. §2.2.18.2.6, “Acquisition Squitter” k. §2.2.23.1.1, “Extended Squitter Format (DF=17)” l. §2.2.18.2.9, “All-Call Reply Protocol” *Note: Item “k.” in regards to Extended Squitter” is included herein since the “SI” field must be set to “0” in generating the “PI” field in accordance with §2.2.14.4.29.*	3.29.2 Surveillance Identifier (“SI”) Code Requirements Mode S Transponders support the requirements of Interrogator codes (II and SI) in accordance with all the following sections of this document. o paragraph 3.18.4.9 “DI” Designator, Identification Field, o paragraph 3.18.4.15 “II” Interrogator Identification Field o paragraph 3.18.4.27, “PI” Parity / Interrogator Identity o paragraph 3.18.4.33 “SD” Special Designator and “IIS”, Subfield in “SD” o paragraph 3.18.4.7 “CL” Code Label o paragraph 3.18.4.13 “IC” Interrogator Code o paragraph 3.18.4.34 “SI” Surveillance Identifier o paragraph 3.22.2.1 Basic Mode-S Error Protection o paragraph 3.22.2.5 “Multisite Lockout Protocol” o paragraph 3.22.2.1 “All-Call Reply Protocol” o paragraph 3.22.2.6 “Acquisition Squitter Format” o paragraph 3.28.1 “Extended Squitter Format” *NOTE: “paragraph 3.28.1” in regards to Extended Squitter is included herein since the “SI” field must be set to “0” in generating the “PI” field in accordance with paragraph 3.18.4.27. Therefore, if the transponder implements Extended Squitter, then subparagraph “paragraph 3.28.1” applies.*

Proposal: for completeness add a bullet pointing to the paragraph mentioning the use of BDS2 with SI code.

DO-181D	ED-73C
2.2.24.2 Surveillance Identifier ("SI") Code Requirements 2.2.24.2.1 MOPS Requirements Relevant to "SI" Mode-S Transponders support the requirements of the Surveillance Identifier ("SI") codes in accordance with the following sections of this document. a. §2.2.14.4.11, "DI" Designator, Identification Field b. §2.2.14.4.17, "II" Interrogator Identification Field c. §2.2.14.4.29, "PI" Parity / Interrogator Identity d. §2.2.14.4.35, "SD" Special Designator and "IIS", Subfield in "SD" e. §2.2.14.4.9, "CL" Code Label f. §2.2.14.4.15, "IC" Interrogator Code g. §2.2.14.4.36, "SI" Surveillance Identifier h. §2.2.18.2.1, Basic Mode-S Error Protection i. §2.2.18.2.5, "Multisite Lockout Protocol" j. §2.2.18.2.6, "Acquisition Squitter" k. §2.2.23.1.1, "Extended Squitter Format (DF=17)" l. §2.2.18.2.9, "All-Call Reply Protocol" m. §2.2.19.1.12.2 Extended Data Source Designators *Note: Item "k." in regards to Extended Squitter" is included herein since the "SI" field must be set to "0" in generating the "PI" field in accordance with §2.2.14.4.29.*	3.29.2 Surveillance Identifier ("SI") Code Requirements Mode S Transponders support the requirements of Interrogator codes (II and SI) in accordance with all the following sections of this document. o paragraph 3.18.4.9 "DI" Designator, Identification Field, o paragraph 3.18.4.15 "II" Interrogator Identification Field o paragraph 3.18.4.27, "PI" Parity / Interrogator Identity o paragraph 3.18.4.33 "SD" Special Designator and "IIS", Subfield in "SD" o paragraph 3.18.4.7 "CL" Code Label o paragraph 3.18.4.13 "IC" Interrogator Code o paragraph 3.18.4.34 "SI" Surveillance Identifier o paragraph 3.22.2.1 Basic Mode-S Error Protection o paragraph 3.22.2.5 "Multisite Lockout Protocol" o paragraph 3.22.2.1 "All-Call Reply Protocol" o paragraph 3.22.2.6 "Acquisition Squitter Format" o paragraph 3.23.1.12.a "Comm-B data selector, BDS" o paragraph 3.28.1 "Extended Squitter Format" *NOTE: "paragraph 3.28.1" in regards to Extended Squitter is included herein since the "SI" field must be set to "0" in generating the "PI" field in accordance with paragraph 3.18.4.27. Therefore, if the transponder implements Extended Squitter, then subparagraph "paragraph 3.28.1" applies.*

3 Testing of Comm-B extraction using DI=3

There is currently no test to check that a register with a BDS2<>0 or a Comm-B Broadcast is correctly extracted when using DI=3.

Comm-B extraction are tested in:

2.5.4.6.2.2 Extended Squitter Protocol Verification, Steps 1 through 11 [ED-73C, §5.5.8.6.2.2]

This is not really the place to add basic testing of GICB protocol. In addition, it will not be tested on a transponder not ES capable.

2.5.4.18 Procedure #18 Comm-B protocol. [ED-73C, §5.5.8.18]

The natural place would have been to insert the additional tests in this procedure which is the basic procedure testing the Comm-B protocol. However the procedure is relatively complicated and it may be difficult to add the additional tests in a simple way.

During the review of this test the following discrepancies have been found between DO-181D and ED-73C:

1. <u>Not the same positive test description between the two documents</u> -

   DO-181D describes "K" with RR=16 , DI≠7 and DI≠3 or DI=7 or DI=3 and RRS=0 to extract an Air Initiated Comm-B, while

   ED-73C, §5.5.8.18.2 does not mentioned DI≠7 and DI≠3.

DO-181D

K =	RR=16 with DI≠7 and DI≠3 or with DI=7 or DI=3 and RRS=0	Air initiated MB extraction

ED-73C 5.5.18.2 states:

K means RR=16 with either DI=1 or DI=7 and RRS=0:	Air-initiated MB extraction

<u>Proposal Alternative 1:</u> In fact K is now K+M+N. In this case ED-73C should be corrected to cover all the cases as follows:

K means RR=16 with either with DI≠7 and DI≠3 or with DI=7 or DI=3 and RRS=0, i.e., (K=1, M=0) or (K=1, M=1, N=1) in Figure 3-18:	Air-initiated MB extraction

<u>Proposal Alternative 2:</u> Do not perform test with DI=3

Note that only interrogation pattern 3 with K=1 could be performed with DI=3

The other interrogation patterns 6,9,12,18,19,24 where K=1 are also with B=1 (DI=1). Therefore DI=3 is not possible.

Interrogation pattern 15 (K=1) is with A=1 (PC=4) and therefore cannot be a DI=3 as PC shall not be used with DI=3.

In this case, modify DO-181D as follows

K =	RR=16 with DI≠7 and DI≠3 or with DI=7 ~~or DI=3~~ and RRS=0	Air initiated MB extraction

and align ED-73C.

2. Not the same negative test - ED-73C, §5.5.8.18.3 states:

> The interrogation patterns 2, 5, 8, 11, 14, 17, 20 and 23 shall include, when RR=16 is used, the combinations of RR=16 with DI=7 and DI=3 and RRS Codes 1 through 15. It shall be verified that these combinations do not cause the air-initiated Comm-B message to be transmitted.

While DO-181D does not mention DI=3 in the same paragraph:

> The interrogation patterns 2 and 14 must include, when RR=16 is used, the combinations of RR=16 with DI=7 and RRS Codes 1 through 15. It must be verified that these combinations do not cause the air-initiated Comm-B message to be transmitted.

Proposal: to modify the text of DO-181D as follows in order to verify that the extraction of register $0X_{16}$ does not result in the extraction of an AICB:

> The interrogation patterns 2 and 14 must include, when RR=16 is used, the combinations of RR=16 with DI=7 and DI=3 and RRS Codes 1 through 15. It must be verified that these combinations do not cause the air-initiated Comm-B message to be transmitted.

2.5.4.20 Procedure #20: Extended Capability Report [ED-73C 5.5.8.21.4]

It could have been easy to add a line requesting the use of DI=3 however the procedure only mentions BDS2 if required and existing procedures may not use a BDS2 different from 0.

2.5.4.32.1 Procedure #32: Transmission of TCAS Capability Information to a Mode S Sensor and to other TCAS aircraft [ED-73C 5.5.8.36.1]

Only Register 10 is extracted. The procedure does not extract register with BDS2 different from 0.

2.5.4.33 Procedure #33: TCAS or transponder/TCAS Interface Failure During Transmission of RA Report and Data Link Capability Report to a Mode S Sensor [ED-73C 5.5.8.37]

It is a good place to test the extraction of RA report using DI=3. However, such extraction is equivalent to the normal extraction of a register with a BDS2=0 and this is already tested using DI=3 on other registers therefore it is not proposed to change this procedure

2.6.x ELS

There are already extractions of register with BDS2 different from zero (17, 18) and Comm-B broadcasts are extracted but without using DI=3. This is the proposed place to add tests for the extraction of registers with DI=3.

2.7.x EHS

Same as ELS but not necessarily provided by all transponders.

Proposal:

To modify ELS test procedure to test the extraction of registers with BDS2 ≠0 (e.g., 17 and 18) and the extraction of a Comm-B broadcast using DI=3 modify the ELS section as follows (modifications are in red):

2.6 Test Procedures for Elementary Surveillance (ELS) Compliant Transponder (§2.2.24)

No test procedure required for this section, since §2.2.24 is introductory material for Elementary Surveillance (ELS).

2.6.1 Ground Initiated Comm-B (§2.2.24.1)

No test procedure required as multiple GICB extractions of the applicable registers are performed in subsequent tests.

2.6.2 Surveillance Identifier ("SI") Code Requirements (§2.2.24.2 and §2.2.24.2.1)

a. Perform Procedure #4 - Non-Selective Lockout Tests for all "II" and "SI" codes as required by §2.5.4.4 (see §2.2.18.2.4).

b. Perform Procedure #5 - Selective Lockout Tests for all "II" and "SI" codes as required by §2.5.4.5 (see §2.2.18.2.5).

Note: Extraction of a register or a Comm-B broadcast using an SI code is performed in §2.6.6.1.

Add a similar note at the end of ED-73, §5.6.2:

Note: Extraction of a register or a Comm-B broadcast using an Si code is performed in §5.6.6.4.

……..

2.6.6 Baseline Aircraft Identification and Aircraft Registration Testing (§2.2.24.6 and §2.2.24.7)

……

2.6.6.1 Part 1: Aircraft Identification and Aircraft Registration Startup (§2.2.24.6 and §2.2.24.7)

Note 1: *This Part 1 includes validation that back to back broadcasts are generated by the transponder. The first broadcast for the change in Aircraft Identification data in Register 2016 and the second broadcast for the change in Data Link Capability in Register 1016 caused by the change in Register 1016. Subsequent Parts of §2.6 do not need to validate both broadcasts.*

Note 2: *Review all subparagraphs of Part 1 prior to performing tests. This is necessary to establish the appropriate timing between changing data inputs and interrogations.*

c. Comm-B Broadcast Extraction because of Aircraft Identification Change: (§2.2.24.3.2.1, §2.2.24.3.2.4, §2.2.24.3.2.5, §2.2.24.3.3.b, §2.2.24.3.4 and §2.2.24.6.3)

As soon as the transponder has replied with the proper Register 20_{16} reply in Part 1, Step b, interrogate the transponder with the following Comm-B Broadcast Extraction interrogations in order to extract the Comm-B broadcast message which should be the Aircraft Identification contained in Register 20_{16}.

COMM-B BROADCAST EXTRACTION INTERROGATION SETUP									
1 ---- 5	6 ---- 8	9 --- 13	14-16	17 -- 20	21 -- 24	25	26	27—28	29 --- 32
				"SD"					
"UF" =	"PC" =	"RR" =	"DI" =	"IIS" =	"RRS =	"X" =	"LOS" =	"XX" =	"TMS" =
4	0	16 (10 HEX)	7	0	0	0	0	0	0

Verify that the transponder replies with a "DF" = 20 reply with the "MB" field providing Aircraft Identification data as follows:

Part 1. c. DF = 20, Register 20_{16} - Aircraft Identification - "MB" Field									
Reply Bits:	33 --- 40	41 -- 46	47 -- 52	53 -- 58	59 -- 64	65 -- 70	71 --76	77 -- 82	83 -- 88
"MB" Bits:	1 --- 8	9 --- 14	15 -- 20	21 -- 26	27 -- 32	33 -- 38	39 -- 44	45 -- 50	51 -- 56
Field:	BDS	Char. 1	Char. 2	Char. 3	Char. 4	Char. 5	Char. 6	Char. 7	Char. 8
Data:	0010 0000	010101	001010	010101	001010	010101	001010	010101	001010
Character:		"U"	"J"	"U"	"J"	"U"	"J"	"U"	"J"

Repeat the extraction with the following Comm-B Broadcast Extraction interrogation in order to extract the Comm-B broadcast message using an SI code (DI=3).

COMM-B BROADCAST EXTRACTION INTERROGATION SETUP USING DI=3							
1 ---- 5	6 ---- 8	9 --- 13	14-16	17 - 22	23	24-27	28 --- 32
				"SD"			
"UF" =	"PC" =	"RR" =	"DI" =	"SIS" =	"LSS =	"RRS" =	"XX" =
4	0	16 (11 HEX)	3	1	1	0	0

Verify that the transponder replies with a "DF" = 20 reply with the "MB" field providing Aircraft Identification data as follows:

Part 1. c. DF = 20, Register 20_{16} - Aircraft Identification - "MB" Field									
Reply Bits:	33 --- 40	41 -- 46	47 -- 52	53 -- 58	59 -- 64	65 -- 70	71 --76	77 -- 82	83 -- 88
"MB" Bits:	1 --- 8	9 --- 14	15 -- 20	21 -- 26	27 -- 32	33 -- 38	39 -- 44	45 -- 50	51 -- 56
Field:	BDS	Char. 1	Char. 2	Char. 3	Char. 4	Char. 5	Char. 6	Char. 7	Char. 8
Data:	0010 0000	010101	001010	010101	001010	010101	001010	010101	001010
Character:		"U"	"J"	"U"	"J"	"U"	"J"	"U"	"J"

……..

h. Common Usage GICB Capability Report, Register 17_{16}: (§2.2.24.4.2, §2.2.24.4.3, §2.2.24.6.4.2 and §2.2.24.7.4.1)

Interrogate the transponder with the following GICB Extraction interrogation in order to extract the Register 1716 Common Usage GICB Capability Report:

REGISTER 17_{16} COMMON USAGE GICB CAPABILITY GICB EXTRACTION EXTENDED DATA SOURCE INTERROGATION SETUP									
1 ---- 5	6 ---- 8	9 --- 13	14-16	17 -- 20	21 -- 24	25	26	27—28	29 --- 32
				"SD"					
"UF" =	"PC" =	"RR" =	"DI" =	"IIS" =	"RRS =	"X" =	"LOS" =	"XX" =	"TMS" =
4	0	17 (11 HEX)	7	0	7	0	0	0	0

Within FIVE (5) seconds of starting the interrogations, verify that the transponder replies with a "DF" = 20 reply with:

Note: The 5 seconds is based on the update rate specified for Register 1716.

(1). Bit 39 (bit 7 of the "MB" field) set to ONE (1) to indicate that Aircraft Identification Capability is established.

(2). Bit 40 (bit 8 of the "MB" field) set to ONE (1) to indicate that Aircraft Registration Capability is established.

Note: If Register 21_{16} is not being serviced, then Bit 40 (bit 8 of the "MB" field) is set to ZERO (0).

Repeat the extraction of Register 17_{16} using the following GICB extraction interrogation in order to use the format for SI code (DI=3) and verify that the content is the same than the content of Register 17_{16} previously extracted using DI=7.

REGISTER 17_{16} COMMON USAGE GICB CAPABILITY GICB EXTRACTION EXTENDED DATA SOURCE INTERROGATION SETUP USING DI=3							
1 ---- 5	6 ---- 8	9 --- 13	14-16	17 -- 22	23	24-27	28 --- 32
				"SD"			
"UF" =	"PC" =	"RR" =	"DI" =	"SIS" =	"LSS =	"RRS" =	Not assigned =
4	0	17 (11 HEX)	3	1	1	7	0

……..

i. Mode S Specific Services GICB Capability, Register 18_{16}: (§2.2.24.5.2, §2.2.24.5.3.a and b, §2.2.24.6.4.3 and §2.2.24.7.4.2)

As soon as the transponder has replied with the proper Register 20_{16} reply in Part 1, Step b as required in Part 1, Step g, interrogate the transponder with the following GICB Extraction interrogation in order to extract the Register 18_{16} Mode S Specific Services GICB Capability:

REGISTER 18_{16} MODE S SPECIFIC SERVICES CAPABILITY GICB EXTRACTION EXTENDED DATA SOURCE INTERROGATION SETUP									
1 ---- 5	6 ---- 8	9 --- 13	14-16	17 -- 20	21 -- 24	25	26	27—28	29 --- 32
				"SD"					
"UF" =	"PC" =	"RR" =	"DI" =	"IIS" =	"RRS =	"X" =	"LOS" =	"XX" =	"TMS" =
4	0	17 (11 HEX)	7	0	8	0	0	0	0

Within FIVE (5) seconds of starting the interrogations, verify that the transponder replies with a "DF" = 20 reply with:

Note: The 5 seconds is based on the update rate specified for Register 18_{16}.

(1). Bit 73 (bit 41 of the "MB" field) set to ONE (1) to indicate that Data Link Capability 1016 is established.

(2). Bit 57 (bit 25 of the "MB" field) set to ONE (1) to indicate that Aircraft Identification Capability 2016 is established.

(3). Bit 56 (bit 24 of the "MB" field) set to ONE (1) to indicate that Aircraft Registration Capability 2116 is established.

(4). Bit 66 (bit 34 of the "MB" field) set to ONE (1) to indicate that Register 17_{16} Servicing Capability is established.

(5). Bit 65 (bit 33 of the "MB" field) set to ONE (1) to indicate that Register 18_{16} Servicing Capability is established.

Repeat the extraction of Register 18_{16} using the following GICB extraction interrogation in order to use the format for SI code (DI=3) and verify the content is the same than the content of Register 18_{16} previously extracted using DI=7.

REGISTER 18_{16} MODE S SPECIFIC SERVICES CAPABILITY GICB EXTRACTION EXTENDED DATA SOURCE INTERROGATION SETUP USING DI=3							
1 ---- 5	6 ---- 8	9 --- 13	14-16	17 -- 22	23	24-27	28 --- 32
				"SD"			
"UF" =	"PC" =	"RR" =	"DI" =	"SIS" =	"LSS =	"RRS" =	Not assigned =
4	0	17 (11 HEX)	3	1	1	8	0

Make the same modifications in ED-73C 5.6.6.1 c, h & i.

4 Action

The meeting is invited to review the proposed changes.