EUROCAE WG49N9	Working Paper WG49N9-04
Actions ()	AGENDA Item 6.2.12

The European Organisation for Civil Aviation Equipment
L'Organisation Européenne pour l'Equipement de l'Aviation Civile

Inserted all the approved changes into WP 8-04 from WP 8-29a Rev 3, WP 8-04, WP 8-11 Rev 2, and WP 5-18 (There are a few outstanding queries on this such as .- What about paras - 5.5.8.17.4, - 6.4.5.10 ? Also the reference to figure 3-12 not found)

MINIMUM OPERATIONAL PERFORMANCE SPECIFICATION FOR SECONDARY SURVEILLANCE RADAR MODE S TRANSPONDERS

This document is the exclusive intellectual and commercial property of EUROCAE.
It is presently commercialised by EUROCAE.
This electronic copy is delivered to your company/organisation **for internal use exclusively**.
In no case it must be re-sold, or hired, lent or exchanged outside your company.

ED-73B

January 2003

Supersedes
Document ED-73A
February 1999

17, rue Hamelin
75783 PARIS, Cedex 16, France
Web Site : www.eurocae.org

Tel : 33 1 45 05 71 88
Fax : 33 1 45 05 72 30
Email : eurocae@eurocae.com

© EUROCAE, 2003

MINIMUM OPERATIONAL PERFORMANCE SPECIFICATION FOR SECONDARY SURVEILLANCE RADAR MODE S TRANSPONDERS

This document is the exclusive intellectual and commercial property of EUROCAE.
It is presently commercialised by EUROCAE.
This electronic copy is delivered to your company/organisation **for internal use exclusively**.
In no case it must be re-sold, or hired, lent or exchanged outside your company.

ED-73~~B~~C
~~January 2003~~Date ???????

Supersedes
Document ED-73~~A~~B
~~February 1999~~January 2003

Draft change proposal i after WG 49 meeting 4

TABLE OF CONTENTS

FOREWORD viii

CHAPTER 1 ..... INTRODUCTION 1

1.1 Purpose And Scope 1
1.2 Applicability 1
1.3 Description of System 1
1.3.1 Mode A/C SSR 2
1.3.2 Mode S SSR 2
1.4 Aircraft Equipment 2
1.4.1 General 2
1.4.2 Classes, Capability and Applicability of Equipment 2
1.4.3 Composition of Equipment 4
1.5 Definitions, Abbreviations and Measurement Conventions 5
1.5.1 Mandating and Recommendation Phrases 5
1.5.2 Definitions 5
1.5.3 Abbreviations 6
1.5.4 Measurement Conventions ..... 8~~7~~8
1.6 Interrogation Signals ..... 9~~7~~9
1.6.1 Received PAM Signals ..... 9~~7~~9
1.6.2 Interrogation Carrier Frequency ..... 9~~7~~9
1.6.3 PAM Pulse Characteristics ..... 9~~7~~9
1.6.4 DPSK Pulse Characteristics ..... 11~~7~~11

CHAPTER 2 ..... GENERAL DESIGN SPECIFICATION 13~~7~~13

2.1 Airworthiness ..... 13~~7~~13
2.2 International Telecommunications Union ..... 13~~7~~13
2.3 Fire Protection ..... 13~~7~~13
2.4 Operation Of Controls ..... 13~~7~~13
2.5 Control and Indication Functions ..... 13~~7~~13
2.6 Antenna / Transponder Configurations ..... 15~~7~~15
2.7 Mode S Transponder Hijack Mode ..... 16~~7~~16
2.7.1 General ..... 16~~7~~16
2.7.2 Hijack Mode Entry Procedures ..... 16~~7~~16
2.7.3 Active Hijack Mode Operations ..... 18~~7~~18
2.7.4 Standby Hijack Mode Operations ..... 20~~7~~20
2.7.5 Hijack Mode Indication ..... 21~~7~~21
2.7.6 Hijack Mode Exit Procedures ..... 22~~7~~22
2.8 Effects of Tests ..... 22~~7~~22
2.9 Software Design ..... 22~~7~~22
2.10 Data Interfaces ..... 22~~7~~22

© EUROCAE, 2003

CHAPTER 3 ..... MINIMUM PERFORMANCE SPECIFICATION STANDARD TEST CONDITIONS ..... 23~~723~~

3.1 Introduction ..... 23~~723~~

3.1.1 Classes of Equipment ..... 23~~723~~

3.1.2 Antenna ..... 23~~723~~

3.1.3 Signal Levels ..... 23~~723~~

3.2 Receiver Characteristics ..... 23~~723~~

3.2.1 Received Interrogation Tolerances ..... 23~~723~~

3.2.2 Sensitivity Variation with Frequency ..... 23~~723~~

3.2.3 Bandwidth ..... 23~~723~~

3.2.4 Sensitivity and Dynamic Range ..... 24~~724~~

3.3 Transmitter Characteristics ..... 24~~724~~

3.3.1 Reply Transmission Frequency ..... 24~~724~~

3.3.2 Transmitter Reply Spectrum ..... 24~~724~~

3.3.3 RF Peak Output Power ..... 24~~724~~

3.3.4 Residual Power Output ..... 24~~724~~

3.4 Reply Rate Capability ..... 25~~725~~

3.4.1 Reply Rate Capability - Mode A/C ..... 25~~725~~

3.4.2 Reply Rate Capability - Mode S ..... 25~~725~~

3.4.3 Mode S ELM Peak Reply Rate ..... 25~~725~~

3.5 Mode A/C Replies ..... 26~~726~~

3.5.1 Mode A/C Framing Pulses ..... 26~~726~~

3.5.2 Mode A/C Information Pulses ..... 26~~726~~

3.5.3 Mode A/C Special Position Identification (SPI) Pulse ..... 26~~726~~

3.5.4 Mode A/C Reply Pulse Shape ..... 26~~726~~

3.5.5 Mode A/C Reply Pulse Position Tolerance ..... 27~~727~~

3.5.6 Mode A/C Coding ..... 27~~727~~

3.6 Mode S Replies (See Figure 3-2) ..... 27~~727~~

3.6.1 Mode S Reply Preamble ..... 28~~728~~

3.6.2 Mode S Reply Data Pulses ..... 28~~728~~

3.6.3 Special Position Identification (SPI) ..... 28~~728~~

3.6.4 Mode S Reply Pulse Shape ..... 28~~728~~

3.6.5 Mode S Reply Pulse Intervals ..... 28~~728~~

3.7 Reply Delay and Jitter ..... 28~~728~~

3.7.1 Mode A/C Reply Delay and Jitter ..... 28~~728~~

3.7.2 Mode S Reply Delay and Jitter ..... 29~~729~~

3.8 Side Lobe Suppression Characteristics ..... 29~~729~~

3.8.1 General ..... 29~~729~~

3.8.2 Side Lobe Suppression, Mode A/C, Mode A/C-Only All-Call, and Mode A/C/S All-Call ..... 29~~729~~

3.8.3 Side Lobe Suppression, Mode S Formats ..... 30~~730~~

© EUROCAE, 2003

3.9 Pulse Decoder Characteristics ..... 30~~730~~
3.9.1 General ..... 30~~730~~
3.9.2 Pulse Level Tolerances ..... 31~~731~~
3.9.3 Pulse Position Tolerances ..... 31~~731~~
3.9.4 Pulse Duration Tolerances ..... 31~~731~~
3.9.5 Sync Phase Reversal Position Tolerance ..... 33~~733~~
3.10 Desensitisation and Recovery ..... 33~~733~~
3.10.1 Echo Suppression ..... 33~~733~~
3.10.2 Recovery ..... 33~~733~~
3.10.3 Dead Time ..... 34~~734~~
3.11 Reply Rate Limiting ..... 34~~734~~
3.12 Response in the Presence of Interference ..... 35~~735~~
3.12.1 Mode A and Mode C with Random Interfering Pulse ..... 35~~735~~
3.12.2 Simultaneous Interrogations of Mode A and Mode C ..... 35~~735~~
3.12.3 Low Level Asynchronous Interference ..... 35~~735~~
3.12.4 Standard Interfering Pulse ..... 36~~736~~
3.12.5 Pulse Pair Interference ..... 36~~736~~
3.12.6 TACAN/DME and other Spurious Pulse Interference ..... 36~~736~~
3.13 Undesired Replies ..... 37~~737~~
3.14 Self Test and Monitors ..... 37~~737~~
3.14.1 Self Test ..... 37~~737~~
3.14.2 Squitter Monitor ..... 37~~737~~
3.14.3 Failure Indication ..... 37~~737~~
3.15 Mutual Suppression Capability ..... 38~~737~~
3.15.1 Response to Mutual Suppression Pulses ..... 38~~737~~
3.15.2 Mutual Suppression Interface ..... 38~~738~~
3.16 Diversity Operation ..... 38~~738~~
3.16.1 General ..... 38~~738~~
3.16.2 Diversity Antenna Selection ..... 38~~738~~
3.16.3 Signal Strength Threshold ..... 39~~738~~
3.16.4 Received Signal Delay Threshold ..... 40~~739~~
3.16.5 Diversity Transmission Channel Isolation ..... 40~~739~~
3.16.6 Reply Delay of Diversity Transponders ..... 40~~739~~
3.16.7 Squitter Antenna Selection ..... 40~~739~~
3.17 Data Handling and Interfaces ..... 41~~740~~
3.17.1 Direct Data ..... 41~~740~~
3.17.2 Indirect Data ..... 45~~743~~
3.17.3 Standard Transaction Interfaces ..... 46~~744~~
3.17.4 ELM Service Interfaces ..... 47~~745~~
3.17.5 Downlink Message Cancellation ..... 49~~747~~

© EUROCAE, 2003

3.18 Description of the Mode S Signal Format ..... 49~~47~~47
3.18.1 Format Structure, Interrogation and Reply ..... 49~~47~~47
3.18.2 Bit Numbering and Sequence ..... 49~~47~~47
3.18.3 Fields ..... 49~~47~~47
3.18.4 Field Descriptions ..... 50~~48~~48
3.19 Mode S Transponders ..... 57~~55~~55
3.20 The Level 1 Transponder ..... 57~~55~~55
3.20.1 Mode S Formats ..... 58~~56~~56
3.20.2 Mode S Protocols ..... 58~~56~~56
3.21 Data Link Transponder Description (Level 2 and Higher) ..... 64~~61~~61
3.21.1 The Data Link (Level 2) Transponder ..... 65~~62~~62
3.21.2 Multisite Message Protocol ..... 73~~69~~69
3.21.3 Uplink ELM Capability (Level 3) Transponder ..... 91~~87~~87
3.21.4 Downlink ELM Capability (Level 4) Transponder (Figures 3-21 and 3-22) ..... 92~~88~~88
3.21.5 Enhanced Data Link Capability (Level 5) Transponder ..... 93~~89~~89
3.22 Antenna ..... 98~~94~~94
3.22.1 Frequency of Operation ..... 98~~94~~94
3.22.2 Impedance and VSWR ..... 98~~94~~94
3.22.3 Polarisation ..... 98~~94~~94
3.22.4 Radiation Pattern ..... 98~~94~~94
3.23 ACAS-Compatible Mode S Transponder ..... 98~~94~~94
3.23.1 Message Fields and Protocols ..... 99~~95~~95
3.23.2 General Requirements of the Mode S Interface to the ACAS Equipment ..... 107~~103~~103
3.23.3 Data provided by ACAS Equipment to the Mode S Transponder .. 108~~104~~104
3.23.4 ACAS-Compatible Transponder Automatic Performance Monitoring ..... 109~~105~~105
3.24 Power Interruption. ..... 109~~105~~105

CHAPTER 4 ..... MINIMUM PERFORMANCE SPECIFICATION UNDER ENVIRONMENTAL TEST CONDITIONS ..... 136~~132~~132
4.1 Introduction ..... 136~~132~~132
4.2 Temperature and Altitude ..... 136~~132~~132
4.2.1 Low Temperature ..... 136~~132~~132
4.2.2 High Temperature ..... 137~~133~~133
4.2.3 Altitude ..... 137~~133~~133
4.2.4 Decompression ..... 137~~133~~133
4.2.5 Overpressure Test ..... 137~~133~~133
4.3 Temperature Variation ..... 138~~134~~134
4.4 Humidity ..... 138~~134~~134

© EUROCAE, 2003

4.5 Shock ..... 138~~7134~~

4.5.1 Operational Shocks ..... 138~~7134~~

4.5.2 Crash Safety Shocks ..... 138~~7134~~

4.6 Vibration ..... 138~~7134~~

4.7 Explosion Proofness ..... 138~~7134~~

4.8 Water Proofness ..... 139~~7134~~

4.9 FLUIDS SUSCEPTIBILITY ..... 139~~7135~~

4.10 Sand and Dust ..... 139~~7135~~

4.11 Fungus Resistance ..... 139~~7135~~

4.12 Salt Spray ..... 139~~7135~~

4.13 Magnetic Effect ..... 139~~7135~~

4.14 Power Input ..... 139~~7135~~

4.14.1 Normal Operating Conditions ..... 139~~7135~~

4.14.2 Abnormal Operating Conditions ..... 139~~7135~~

4.15 Voltage Spike Conducted Test ..... 139~~7135~~

4.15.1 Category A ..... 140~~7135~~

4.15.2 Category B ..... 140~~7135~~

4.16 Audio Frequency Conducted Susceptibility ..... 140~~7135~~

4.17 Induced Signal Susceptibility ..... 140~~7135~~

4.18 Radio Frequency Susceptibility ..... 140~~7135~~

4.19 Emission Of Radio Frequency Energy ..... 140~~7135~~

4.20 Lightning Induced Transient Susceptibility ..... 140~~7135~~

4.21 Lightning Direct Effects ..... 142~~7135~~

4.22 Icing ..... 142~~7135~~

4.23 Electrostatic Discharge (ESD) ..... 142~~7135~~

CHAPTER 5 ..... TEST PROCEDURES 143~~7135~~

5.1 General ..... 143~~7135~~

5.1.1 Power Input Voltage ..... 143~~7135~~

5.1.2 Power Input Frequency ..... 143~~7135~~

5.1.3 Adjustment of Equipment ..... 143~~7135~~

5.1.4 Test Instrument Precautions ..... 143~~7135~~

5.1.5 Ambient Conditions ..... 143~~7135~~

5.1.6 Connected Loads ..... 143~~7135~~

5.1.7 Recording of Test Results ..... 143~~7135~~

5.1.8 Test Procedures ..... 144~~7135~~

5.2 Standard Interrogation Test Signals ..... 144~~7135~~

5.2.1 General Characteristics ..... 144~~7135~~

5.2.2 Mode A/C, Mode A/C/S All-Call and Mode A/C-Only All-Call Interrogations ..... 144~~7135~~

5.2.3 Mode S Interrogations ..... 145~~7135~~

© EUROCAE, 2003

5.3 Transponder Test Set ..... 145~~7~~135
5.4 Test Procedures Related to Receiver and Transmitter ..... 147~~7~~135
5.4.1 Receiver Characteristics ..... 147~~7~~135
5.4.2 Transmitter Characteristics ..... 148~~7~~135
5.4.3 Reply Characteristics ..... 153~~7~~135
5.4.4 Side Lobe Suppression (Paragraph 3.8) ..... 170~~7~~135
5.4.5 Pulse Decoder Characteristics (Paragraph 3.9) ..... 172~~7~~135
5.4.6 Transponder Desensitisation and Recovery ..... 174~~7~~135
5.4.7 Response in the Presence of Interference (Paragraph 3.12) ..... 176~~7~~135
5.4.10 Mutual Suppression Capability (Paragraph 3.15) ..... 179~~7~~135
5.4.12 Data Handling and Interfaces ..... 181~~7~~135
5.4.13 Interface Integrity Testing (Paragraph 3.17.2 b.) ..... 191~~7~~135
5.4.14 Power Interruption (Paragraph 3.24) ..... 191~~7~~135
5.5 Test Procedures for the Surveillance and Communications Protocols ..... 191~~7~~135
5.5.1 Introduction ..... 191~~7~~135
5.5.2 Transponder States ..... 191~~7~~135
5.5.3 Logic Tests ..... 192~~7~~135
5.5.4 Tests for Data Flow ..... 192~~7~~135
5.5.5 Scope of Tests ..... 192~~7~~135
5.5.6 Required Test Equipment ..... 193~~7~~135
5.5.7 Selection and Use of the Test Procedures ..... 194~~7~~135
5.5.8 Test Procedures ..... 194~~7~~135
CHAPTER 6 ..... INSTALLED EQUIPMENT PERFORMANCE 257~~7~~135
6.1 Introduction ..... 257~~7~~135
6.2 Equipment Installation ..... 257~~7~~135
6.2.1 Accessibility ..... 257~~7~~135
6.2.2 Aircraft Environment ..... 257~~7~~135
6.2.3 Display Visibility ..... 257~~7~~135
6.2.4 Failure Protection ..... 257~~7~~135
6.2.5 Interference Effects ..... 257~~7~~135
6.2.6 Inadvertent Turn-off ..... 258~~7~~135
6.2.7 Transmission Line(s) ..... 258~~7~~135
6.2.8 Antenna Location ..... 258~~7~~135
6.2.9 Radiation Pattern ..... 258~~7~~135
6.2.10 Mutual Suppression ..... 258~~7~~135
6.2.11 Aircraft Power Source ..... 258~~7~~135
6.2.12 Single Operational Transponder at One Time ..... 259~~7~~135
6.2.13 Validation of declared on-the-ground status ..... 259~~7~~135

© EUROCAE, 2003

6.3 Conditions of Test ..... 260~~7135~~
6.3.1 Power Input ..... 260~~7135~~
6.3.2 Associated Equipment or Systems ..... 260~~7135~~
6.3.3 Environment ..... 260~~7135~~
6.3.4 Adjustment of Equipment ..... 260~~7135~~
6.3.5 Warm-up Period ..... 260~~7135~~
6.4 Test Procedures for Installed Equipment Performance ..... 260~~7135~~
6.4.1 General ..... 260~~7135~~
6.4.2 Ground Test Procedures ..... 263~~7135~~
6.4.3 Installed Equipment Performance Tests ..... 263~~7135~~
6.5 Flight Test Procedures ..... 268~~7135~~
LIST OF MEMBERS OF EUROCAE WORKING GROUP 49 ..... 269~~7135~~
ED-73B IMPROVEMENT SUGGESTION FORM 267

© EUROCAE, 2003

Draft change proposal[viii] after WG 49 meeting 4

FOREWORD

1. This document prepared by EUROCAE Working Group 49 was accepted by the Council of EUROCAE in October 2002.

2. EUROCAE is an international non-profit making organisation. Membership is open to European users and manufacturers of equipment for aeronautics, trade associations, national civil aviation administrations and, under certain conditions, non-European Members. Its work programme is principally directed to the preparation of performance specification and guidance documents for civil aviation equipment, for adoption and use et European and world-wide levels.

3. The findings of EUROCAE are resolved after discussion amongst its members and in co-operation with RTCA Inc, Washington D.C., USA and/or the Society of Automobile Engineers (SAE), Warrendale PA, USA through their appropriate committees.

4. This document supersedes ED-73 A "MOPS for Secondary Surveillance Radar Modes S Transponders" (February 1999).

   Differences between this document and ED-73 A are

   - The inclusion of requirements and tests to ensure correct altitude quantisation information in Mode S replies.
   - Updating the document to include the requirements changes in ICAO Annex 10 Volume IV Amendment 77.
   - Changing the document to clarify that extended squitter is optional.
   - The inclusion of optional provisions for operation under hijack conditions.
   - Corrections found necessary during the use of ED-73A.

5. This document has been compiled taking into account implications of EUROCAE ED-82A MOPS for Aircraft Data Link Processors and AEEC ARINC 718 A the Characteristic for Mode S Transponders with Extended Interface Functions.

6. Compilation was co-ordinated with activities of ICAO, RTCA and EUROCONTROL.

7. Differences between this document and RTCA DO-181C (Minimum Operational Performance Standards for Air Traffic control Radar Beacon System/Mode Select (ATCRBS/Mode S) Airborne Equipment) Change 1 are :

   - introduction of different classes of equipment;
   - the use of Transponder Level Definition 1, 2, 3, 4, 5;
   - the inclusion of hijack option in the transponder label (Paragraph 1.4.2.2)
   - the tests specified in chapter 5 differ in some cases but are technically equivalent.

~~8.~~

8. The Minimum Operation Performance Specifications are recommendations only. EUROCAE is not an official body of the European Governments therefore its recommendations are valid as statements of official policy only when adopted by a particular government or conference of governments.

9. Copies of this document may be obtained from:

EUROCAE
17, rue Hamelin
75783 PARIS Cedex 16
FRANCE

Phone: 33 1 45 05 71 88
Fax: 33 1 45 05 72 30
E-mail: eurocae@eurocae.com
Web site: www.eurocae.org

© EUROCAE, 2003

Draft change proposal [1] after WG 49 meeting 4

CHAPTER 1

INTRODUCTION

1.1 PURPOSE AND SCOPE

These minimum operational performance specifications are designed to ensure that aircraft Mode S Secondary Surveillance Radar (SSR) transponder equipments certificated to them will be compatible with ICAO Annex 10, Volume IV, Part I up to Amendment 77.

These minimum operational performance specifications do not include detailed descriptions of Mode S coding formats, protocols and interfaces; these can be found in ICAO Annex 10, Volume IV.

This document replaces the previous version ED-73.

Chapter 1 of this document provides information necessary to understand the need for the equipment requirements and tests defined in the remaining chapters. It describes typical equipment applications and operational objectives and is the basis for the performance criteria stated in Chapter 2 to Chapter 4. Definitions essential to proper understanding of this document are also provided in Chapter 1.

Chapter 2 contains general design specifications.

Chapter 3 contains the minimum performance specification for the equipment, defining performance under standard operating conditions.

Chapter 4 specifies the environmental test conditions which provide a laboratory means of determining the overall performance characteristics of the equipment under conditions representative of those which may be encountered in actual operations.

Chapter 5 details recommended test procedures for demonstrating compliance with Chapters 3 and 4.

Chapter 6 specifies the performance demanded of the installed equipment. It also includes ground and flight tests of the installed equipment which may be required when performance cannot be adequately determined through testing under standard test conditions.

1.2 APPLICABILITY

Compliance with this minimum performance specification by manufacturers, installers and users is recommended as a means of ensuring that the equipment will satisfactorily perform its intended function(s) under all conditions encountered in normal aircraft operations.

Any regulatory application of this document in whole or in part is the sole responsibility of appropriate government agencies.

As the measured values of equipment performance characteristics may be a function of the method of measurement, standard test conditions and methods of test are recommended in this document.

1.3 DESCRIPTION OF SYSTEM

SSR is a cooperative surveillance and communications system for air traffic control. It employs ground-based interrogators and airborne transponders.

© EUROCAE, 2003

1.3.1 Mode A/C SSR

Mode A/C SSR uses the aircraft transponder to respond to interrogations from the ground to provide:

a. a 4 096-code identity code (Mode A), or,

b. pressure altitude information, in 100 feet increments (Mode C).

The Mode A code is entered by aircrew via a control unit in the cockpit; Mode C pressure altitude information is derived from an encoding barometric altimeter or air data computer system.

The plan position of the aircraft, with respect to the ground interrogator, is determined from range and azimuth measurements made on the transponder replies.

1.3.2 Mode S SSR

Mode S SSR can accommodate ground-air-ground data link communications integrally with the surveillance interrogations and replies.

Mode S interrogators provide surveillance of Mode A/C-equipped aircraft as well as Mode S-equipped aircraft; Mode S transponders include Mode A/C functions and will reply to Mode A/C interrogators. In addition, the data link potential of Mode S permits use of the transponder for a number of air traffic management (ATM) and aircraft separation assurance (ASA) functions (e.g. ACAS).

1.4 AIRCRAFT EQUIPMENT

1.4.1 General

The transponder is the principal component of the airborne equipment of Mode A/C and Mode S SSR. It performs all the necessary surveillance functions by providing the appropriate reply to Mode A/C and/or Mode S interrogations.

When used for data link transmissions, the Mode S transponder accepts the message as it arrives as part of an interrogation and passes it on to its destination. A message to be transmitted to the ground is accepted by the Mode S transponder at the interface and is incorporated in a reply made to an interrogation.

All Mode S transmissions, uplink as well as downlink, are protected by a 24-bit parity code. The transponder performs decoding and encoding as required, so that the surveillance function as well as the message content is protected.

The complexity of the transponder required for surveillance only, has been kept at the minimum needed for this function.

Some Mode S transponders may be equipped with uplink and downlink message interfaces providing interaction with input/output (I/O) devices. Some transponders may include the devices as an integral part of their design.

1.4.2 Classes, Capability and Applicability of Equipment

1.4.2.1 Transponder Functionality

ICAO documentation defines five 'levels' of transponder to indicate the Mode S protocols that the transponder is designed to support.

a. Level 1-

Surveillance only (No 112 bit Mode S format capabilities).

b. Level 2 -

Surveillance and Comm A/B.

© EUROCAE, 2003

c. Level 3 -

Surveillance, Comm A/B, and Uplink ELM.

d. Level 4 -

Surveillance, Comm A/B, Uplink ELM and Downlink ELM.

e. Level 5 -

Full level 4 plus enhanced protocols for parallel processing of Comm-B, Uplink ELM and Downlink ELM transactions.

f. Extended squitter -

Extended squitter transponders shall have the capabilities of level 2, 3, 4 or 5 and also those prescribed for extended squitter operation (see Chapter 3 of this document).

g. SI Capability -

Transponders with the ability to process SI codes shall have the capabilities of a Transponder Level 1, 2, 3, 4 or 5 and also those prescribed for SI code operation (see Chapter 3 of this document).

h. Hijack Mode Capability –

Transponders that support the Hijack Mode shall have the capabilities of a Transponder Level 1, 2, 3, 4 or 5 and also those prescribed for Hijack Mode (see section 2.7 of this document).

1.4.2.2 Transponder Labelling

Each transponder shall be clearly labelled with its actual functional level and its optional capabilities. This shall be the word "level" followed by one digit between 1 and 5 followed by "e" if Extended squitter, "s" if SI code processing is supported and/or “h” if the Hijack Mode is supported.

The label must be clearly visible when the transponder is mounted on the aircraft. In the case of a change of transponder level or capability the label must changed appropriately.

NOTE: *For example, a level 4 transponder with SI capability, Extended squitter capability, and Hijack Mode support, would be labelled "level 4esh".*

1.4.2.3 Mutual Suppression

It is assumed that transponders for use on aircraft equipped with DME or other equipment operating in the same frequency band will support mutual suppression.

1.4.2.4 Classes of Equipment

a. Two classes of equipment are considered in these minimum operational performance specifications, CLASS 1 and CLASS 2.

b. The specified performance for each of these classes is related to intended use and/or the type of aircraft in which the equipment is to be installed. The classes are defined as follows.

© EUROCAE, 2003

(1) CLASS 1 Equipment

CLASS 1 equipment is intended for use in aircraft that operate at altitudes above 15000 ft, or have a maximum cruising true airspeed in excess of 175 kt (324 km/h), and shall meet the following requirements:

A. RF peak output power > 21 dBW (Paragraph 3.3.3)

B. Reply transmission frequency tolerance + 1 MHz (Paragraph 3.3.1)

C. Mode A and C reply rate capability > 1200 replies/second (Paragraph 3.4.1)

(2) CLASS 2 Equipment

CLASS 2 equipment may be used in aircraft that operate at altitudes not exceeding 15 000 ft, and have a maximum cruising true airspeed not exceeding 175 kt (324 km/h), and shall meet the following requirements:

A. RF peak output power > 18.5 dBW (Paragraph 3.3.3)

B. Reply transmission frequency tolerance + 1 MHz (Paragraph 3.3.1)

C. Mode A and C reply rate capability > 1000 replies/second (Paragraph 3.4.1)

c. Unless otherwise specified, the performance criteria of this document apply to both classes of equipment.

1.4.2.5 Antenna Diversity

In order to avoid the performance degradation due to the screening effects that can occur when a single antenna is mounted on the bottom of the aircraft, a second antenna is mounted on top of the aircraft. The transponder processes interrogations on both antennas and transmits the reply on the antenna which received the strongest valid interrogation. Aircraft with gross mass in excess of 5 700 kg or a maximum cruising true airspeed capability in excess of 250 kt (463 km/h) installed with Mode S equipment are required to operate with antenna diversity.

1.4.2.6 Altitude Quantization

Mode S transponders may quantize altitude data in either 25 foot or 100 foot increments. ICAO Annex 10 recommends that the best quantization available on the aircraft is used.

1.4.2.7 ACAS

SSR equipment intended for use as part of an ACAS, shall in addition meet the performance criteria specified in paragraphs 3.3.4 and 3.23~~3.23~~.

1.4.3 Composition of Equipment

a. The word "equipment" as used in this document includes all components and units necessary for the system to properly perform its intended function(s). For example, the "equipment" may include a transponder, control panel, antenna(s) and interconnecting cables.

b. In the case of this example, all of the foregoing components and units comprise the "equipment". It should not be inferred from this example that each SSR transponder equipment design will necessarily include all of the foregoing components or units. This will depend on the specific design chosen by the manufacturer.

© EUROCAE, 2003

Draft change proposal 5 after WG 49 meeting 4

1.5 DEFINITIONS, ABBREVIATIONS AND MEASUREMENT CONVENTIONS

1.5.1 Mandating and Recommendation Phrases

a. "Shall"

The use of the word SHALL indicates a mandated criterion; ie compliance with the particular procedure or specification is mandatory and no alternative may be applied.

b. "Should"

The use of the word SHOULD (and phrases such as "IT IS RECOMMENDED THAT ...", etc.) indicate that though the procedure or criterion is regarded as the preferred option, alternative procedures, specifications or criteria may be applied, provided that the manufacturer, installer or tester can provide information or data to adequately support and justify the alternative.

1.5.2 Definitions

Algorithm - A set of well-defined rules for the solution of a problem in a finite number of steps.

Burst - A series of interrogations.

Cancellation - This is a protocol used by the ADLP to cancel downlink messages that are queued in the transponder awaiting extraction by the Mode S ground system.

Closeout - This is a protocol that confirms to a transponder that Comm-B, Comm-C (ELM) or Comm-D (ELM) transactions have been successfully completed and must be cleared from the transponder.

Desensitisation - Temporary reduction of transponder sensitivity after receipt of a signal. Used to reduce echo (multipath) effects.

Diversity - A method of selecting the reply transmission path based on the relative amplitude of the received interrogation signal from two or more channels with independent antennas.

Downlink - A signal propagated from the transponder.

Dynamic Range - The ratio between the overload level and the minimum triggering level in a transponder.

Field - A group of bits in a message treated as a single unit of information.

Framing Pulse - One of the two pulses F_1 and F_2 spaced a nominal 20.3 μs apart which bracket a reply to Mode A and Mode C interrogations.

Format - The specific order in which fields of information appear in a Mode S digital message transmission.

Lockout - This is a protocol which provides a means of preventing a Mode S transponder from replying to 'All-Call' interrogations. See ICAO Annex 10 para 3.1.2.6.9 for full information.

Message - An arbitrary amount of information whose beginning and end are defined or implied.

Minimum Triggering Level (MTL) - The minimum input power level that results in a 90% reply ratio in the Mode A/C format or 99% in the Mode S format if the interrogation signal has all nominal spacings and widths and if the replies are the correct replies assigned to the interrogation format.

Mode A/C - For the purpose of this document, Mode A/C is taken as referring to non-Mode S transactions. Where specific Mode A or Mode C transactions are involved, these are identified individually.

© EUROCAE, 2003

NOTE: *The US term for non-Mode S SSR is ATCRBS (Air Traffic Control Radar Beacon System). It is not used in this document.*

Monopulse - A radar system using a receiving antenna having two or more partially overlapping lobes in the radiation pattern. Sum and difference channels in the receiver compare the amplitudes or phases of the received signal to interpolate azimuth measurement within the radar beam.

Multipath - The propagation phenomenon that results in signals reaching the receiving antenna by two or more paths, generally with a time or phase difference.

ONE(s) - The affirmative value(s) of a binary bit.

Power Off Condition – The condition in which the transponder electrical power is not applied to the receiver, transmitter or related components.

Protocol - A set of conventions between communicating processes on the formats and contents of messages to be exchanged.

Reply Radio - The ratio of a number of replies to the number of interrogations that should cause a reply to be generated.

Side Lobe Suppression (SLS) - A technique to prevent responses from transponders not in the main beam of the interrogating antenna.

Special Position Identification (SPI) - A special pulse used in Mode A/C replies located 4.35 µs following the second framing pulse. When used with Mode S, SPI appears as a code in the flight status (FS) field.

Squitter - The transmission of a specified reply format at a minimum rate without the need to be interrogated.

Standby State – The condition in which transponder electrical power may be applied to the receiver, transmitter and related components but the transponder is disabled from transmitting. In this state the transponder does not reply to interrogations and does not squitter any information in any Mode A/C/S format.

Transaction - The process of accepting and processing an interrogation and generating a corresponding reply.

Uplink - Signal propagated toward a transponder.

ZERO(s) - The negative value(s) of a binary bit.

NOTE: *Definitions of Mode S coding formats, protocols and interfaces are contained in ICAO Annex 10.*

1.5.3 Abbreviations

AA	Address Announced
AC	Altitude Code
ACAS	Airborne Collision Avoidance System
ACS	Altitude Code Subfield
ADLP	Aircraft Data Link Processor
ADS	Comm-A Definition Subfield
AICB	Air Initiated Comm-B
AIS	Aircraft Identification Subfield
AP	Address Parity
AQ	Acquisition Special
ARA	Active Resolution Advisory
ASA	Airborne Separation Assurance
ATCRBS	Air Traffic Control Radar Beacon System
ATM	Air Traffic Management

© EUROCAE, 2003

ATS	Altitude Type Subfield
BCS	Comm-B Capability Subfield
BDS	Comm-B Data Selector Code
CA	Capability
CC	Crosslink Capability
CDS	C - Definition Subfield
CFS	Continuation Subfield
CL	Code Label
DDS	D - Definition Subfield
DELM	Downlink Extended Long Messages
DF	Downlink Format
DI	Designation Identification
DME	Distance Measuring Equipment
DPSK	Differential Phase Shift Keying
DR	Downlink Request
DS	Data Selector
ECS	Extended Capability Subfield
ELM	Extended Length Message
FIFO	First In First Out
FS	Flight Status
GICB	Ground Initiated Comm-B
I	Inquiry Mode
IC	Interrogator Code
ID	Identification (4096 code)
IDS	Identification Designation Subfield
II	Interrogator Identification
IIS	Interrogator Identification Subfield
ILS	Instrument Landing System
KE	Control ELM
LOS	Lockout Subfield
LSS	Lockout Surveillance Subfield
MA	Message Field In Comm-A
MB	Message Field In Comm-B
MBS	Multisite Comm-B Subfield
MC	Message Field in Comm-C
MD	Message Field in Comm-D
ME	Message Extended Squitter
MES	Multisite ELM Subfield
MSB	Most Significant Bit
MTE	Multiple Threat Encounter
MTL	Minimum Triggering Level
MU	Message Field in Comm-U
MV	Message Field in Comm-V
N	Number of transitions at “ 1 ” in DPSK modulation
NC	Number of C segments
ND	Number of D segments
PAM	Pulse Amplitude Modulation
PC	Protocol
PI	Priority/Interrogator Identity
PR	Probability of Reply
RAC	Resolution Advisory Complement

© EUROCAE, 2003

RAI	Resolution Advisory Indicator
RAT	Resolution Advisory Terminated Indicator
RC	Reply Control
RCS	Rate Control Subfield
RF	Radio Frequency
RI	Reply Information
RL	Reply Length
RR	Reply Request
RRS	Reply Request Subfield in SD
RSS	Reservation Status Subfield
SARPS	Standards and Recommended Practices
SAS	Surface Antenna Subfield
SD	Special Designation
SI	Surveillance Identifier
SICASP	SSR Improvements and Collision Avoidance Systems Panel
SIS	Surveillance Identifier Subfield
SL	Sensitivity Level
SLC	Sensitivity Level Control
SLS	Side Lobe Suppression
SPI	Special Position Identification
SRS	Segment Request Subfield
SSR	Secondary Surveillance Radar
TAS	Transmission Acknowledgement Subfield
TCS	Type Control Subfield
TID	Threat Identity Data
TIDA	Threat Identity Data, Altitude
TIDB	Threat Identity Data, Bearing
TIDR	Threat Identity Data, Range
TMS	Tactical Message Subfield
TRS	Transmission Rate Subfield
TTI	Threat Type Indicator
UDS	U-Definition Subfield
UELM	Uplink Extended Length Message
UF	Uplink Format
UM	Utility Message
VDS	V-Definition Subfield
VS	Vertical Status
VSWR	Voltage Standing Wave Ratio

1.5.4 Measurement Conventions

The following measurement conventions apply to the signal and pulse characteristics defined in paragraph 1.6.

PULSE AMPLITUDE - Defined as the peak voltage amplitude of the pulse envelope.

PULSE DURATION - Measured between the half voltage points of the leading and trailing edges.

PULSE RISE TIME - Measured as the time interval between 10% and 90% of peak amplitude on the leading edge of the pulse.

PULSE DECAY TIME - Measured as the time interval between 90% and 10% of peak amplitude on the trailing edge of the pulse.

PULSE-TO-PULSE INTERVALS - Measured between the half voltage points of the leading edges of consecutive pulses.

© EUROCAE, 2003

PHASE REVERSAL LOCATION - Measured at the 90° point of the phase transition.

PHASE REVERSAL DURATION - Measured between the 10° and 170° points of the transition.

PHASE REVERSAL INTERVALS - Measured between 90° points of the transitions.

1.6 INTERROGATION SIGNALS

The following paragraphs describe the signal in space expected to appear at the transponder antenna. The signals in space comprise two types of interrogations distinguished by different modulation techniques: pulse amplitude modulation (PAM) and differential phase shift keying (DPSK).

1.6.1 Received PAM Signals

a. The following interrogations are exclusively PAM signals.

Mode A,

Mode C,

Mode A/Mode S All-Call,

Mode C/Mode S All-Call,

Mode A-Only All-Call,

Mode C-Only All-Call.

b. All of these interrogations use two or more of the four pulses described in paragraph 1.6.3. The pulses are designated P1, P2, P3 and P4.

1.6.2 Interrogation Carrier Frequency

Mode A/C interrogators: 1 030 MHz ± 0.1 MHz

Mode S interrogators: 1 030 ± 0.01 Mhz.

The carrier frequencies of the control transmission and of each of the interrogation pulse transmissions shall not differ from each other by more than 0.2 MHz.

1.6.3 PAM Pulse Characteristics

a. Pulse Shapes

The pulse shapes for PAM interrogations are summarised in Table 1-1.

Pulse Designator	Pulse Duration	Duration Tolerance	Rise Time Min/Max	Decay Time Min/Max
P1,P2,P3,P5	0.8 µs	±0.1 µs	0.05/0.1 µs	0.05/0.2 µs
P4 (short)	0.8 µs	±0.1 µs	0.05/0.1 µs	0.05/0.2 µs
P4 (long)	1.6 µs	±0.1 µs	0.05/0.1 µs	0.05/0.2 µs

TABLE 1-1: PAM INTERROGATION PULSE SHAPES

b. Pulse Patterns (See Figure 1-1)

The pulse patterns of the PAM interrogations are defined inTable 1-2.

INTERROGATION TYPE	INTERVAL (µs) P1-P2	P1-P3	P3-P4	P4 TYPE
Mode A	2 ±0.15	8 ±0.2	-	None
Mode C	2 ±0.15	21 ±0.2	-	None
Mode A/Mode S All-Call	2 ±0.15	8 ±0.2	2 ±0.05	Long
Mode C/Mode S All-Call	2 ±0.15	21 ±0.2	2 ±0.05	Long

© EUROCAE, 2003

Mode A-Only All-Call	2 ±0.15	8 ±0.2	2 ±0.05	Short
Mode C-Only All-Call	2 ±0.15	21 ±0.2	2 ±0.05	Short

TABLE 1-2: PAM INTERROGATION PULSE PATTERNS

© EUROCAE, 2003

c. Relative Pulse Amplitudes

P3 amplitude is P1 ± 1 dB

P4 amplitude is P3 ± 1 dB

1.6.4 DPSK Pulse Characteristics

a. All Mode S (P6 type) interrogations contain DPSK modulation signals. Interrogations are structured as shown in Figure 1-2.

b. Pulse Shapes

(1) Pulses P1, P2 and P5 have the same shapes as PAM pulses P1, P2 and P3 of Paragraph 1.6.3 a.

(2) P6 is either 16.25 ±0.25 µs, or 30.25 ±0.25 µs, in duration.

(3) P6 rise time is between 0.05 and 0.1 µs and the decay time is between 0.05 and 0.2 µs.

c. Relative Pulse Amplitudes

(1) P2 amplitude is not more than 0.25 dB less than the amplitude of P1.

(2) The first microsecond of P6 has amplitude not more than 0.25 dB less than the amplitude of P1.

(3) The amplitude variation of the envelope of P6 is less than 1 dB.

(4) The amplitude variation between successive phase modulation chips in P6 is less than 0.25 dB.

(5) P5 amplitude will vary with respect to P6.

d. Phase Reversals

(1) The first phase reversal within P6 is the sync phase reversal.

(2) The midpoint of each following data phase reversal shall occur only at a time 0.25 times (N + 1) ±0.02 µs after the sync phase reversal, where N is a positive integer > 1 and represents the bit number in the message for each bit that is equal to ONE.

e. Pulse Interval

P1 - P2	2.00 ±0.05 µs
P2 to sync phase reversal of P6	2.75 ±0.05 µs
P6 to sync phase reversal of P6	1.25 ±0.05 µs
P5 to sync phase reversal of P6	0.4 ±0.05 µs

P5 may be overlaid on P6 by the interrogator as a side lobe suppression (SLS) signal in any Mode S interrogation. It will be overlaid on all Mode S-Only All-Call interrogations.

f. Information Content

(1) DPSK signals contain information in data chips within P6. The chips are located after the possible data phase reversals assigned as indicated in paragraphs 1.6.4 d and e.

(2) P6 pulses contain 56 chips (short) or 112 chips (long).

(3) A phase reversal preceding a chip characterises that data bit as a binary ONE. No preceding phase reversal characterises that data bit as a binary ZERO.

© EUROCAE, 2003

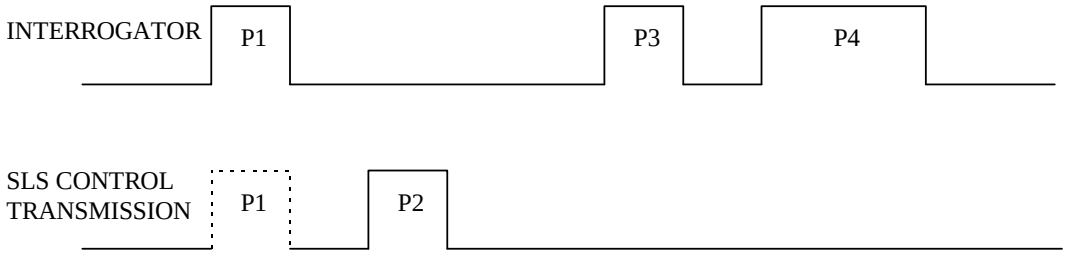

FIGURE 1-1: GENERAL PULSE PATTERNS FOR PAM INTERROGATIONS

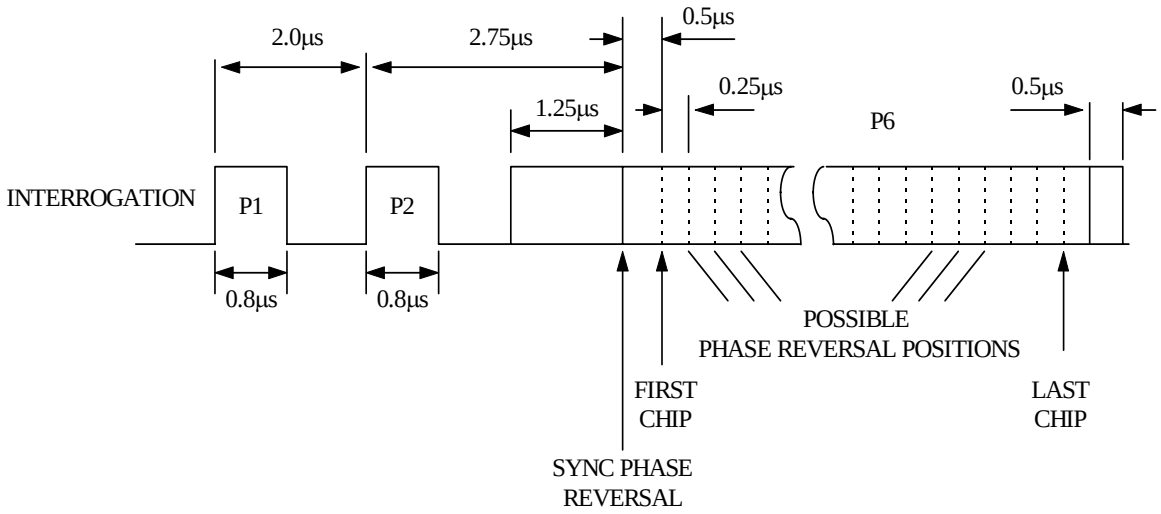

FIGURE 1-2: DPSK PULSE CHARACTERISTICS

© EUROCAE, 2003

Draft change proposal 13 after WG 49 meeting 4

CHAPTER 2

GENERAL DESIGN SPECIFICATION

2.1 AIRWORTHINESS

The equipment shall not, under normal or fault conditions, impair the airworthiness of the aircraft in which it is installed.

2.2 INTERNATIONAL TELECOMMUNICATIONS UNION

The equipment shall comply with the relevant International Telecommunications Union Radio Regulations.

2.3 FIRE PROTECTION

Except for small parts (such as knobs, fasteners, seals, grommets and small electrical parts) that would not contribute significantly to the propagation of a fire, all materials used shall be self-extinguishing.

NOTE: *One means of showing compliance is contained in Joint Airworthiness Requirement (JAR), Part 25, Appendix F.*

2.4 OPERATION OF CONTROLS

The operation of controls intended for use during flight, in all possible positions, combinations and sequences, shall not result in a condition detrimental to the continued performance of the equipment.

Controls which are not intended to be operated in flight shall not be readily accessible to flight personnel.

2.5 CONTROL AND INDICATION FUNCTIONS

If the transponder does not support the Hijack Mode, only sections a, c(1), d(1), e(1), f, g(1), and h are applicable.

The following Control and Indication functions shall be provided:

a. Means of selecting each of the Mode A 4096 Identity reply codes;

b. Means of activating the Hijack Mode of the transponder without involvement of the Control Function.

NOTE: *An example of a means that does not involve the Control Function would be an input discrete connected to a hidden switch.*

c. Means of indicating the Mode A 4096 code selected.
(behavior dependent on the Hijack Mode of the transponder);

(1) If no Hijack Mode has been activated by means b.

All selected Mode A 4096 Codes shall be shown.

(2) If the Hijack Mode has been activated by means b.

The 7500 Hijack Code shall **NOT** be displayed by the Control Function.

© EUROCAE, 2003

d. Means of inhibiting replies to certain interrogations
(behavior dependent on the Hijack Mode of the transponder)

(1) Transponder in Non-Hijack Mode (2.7):

Means of selecting the condition in which the transponder is rendered incapable of generating replies to Mode A/C interrogations, Mode A/C/S All-Call and Mode S-only All-Call interrogations, but not inhibiting the generation of Mode S squitter transmissions and replies to discretely addressed Mode-S interrogations when the aircraft is on the ground (3.17.1 b (3), 3.21.2.6.5, 3.20.2.7 b and 3.20.2.7 c) and is NOT in the Hijack Mode 2.7.

Return to normal operation from this condition shall be possible within five seconds.

If this condition is enabled automatically when the aircraft is on the ground, a flight crew switch is not necessary. If performed manually, this condition shall have no effect on the transmission of extended squitters (If the extended squitter function is implemented in the transponder) (3.21.2.6.2) or on the reporting of on-the-ground state (3.17.1 b (3), 3.21.2.6.5, 3.20.2.7 b, and 3.20.2.7 c).

(2) Transponder in Hijack Mode (2.6):

No method shall be capable of rendering the transponder incapable of generating replies to Mode A/C, Mode A/C/S All Call, and Mode-S Only All-Call interrogations whenever the transponder is in the Hijack Mode (2.6) whether in the airborne or in the on-ground state (3.17.1 b (3), 3.21.2.6.5, 3.20.2.7 b and 3.20.2.7 c). The transponder shall also continue to generate Mode S squitter transmissions and reply to discretely addressed Mode-S interrogations when the aircraft is in the Hijack Mode (2.7).

e. Means of setting the transponder into standby mode. (behavior dependent on the Hijack Mode of the transponder);

(1) Transponder in Non-Hijack Mode (2.7):

Means of selecting the condition in which all transponder functions, other than transmissions on the reply frequency and associated self-testing, are operational (i.e., the Standby condition) when **NOT** in the Hijack Mode (2.7). Return to normal operation from this condition shall be possible within five seconds.

(2) Transponder in Hijack Mode (2.7):

No method shall be capable of placing the transponder into the Standby Mode once the transponder has entered the Hijack Mode (2.7) except as specified in 2.7.6.2.

f. Means of initiating the IDENT (SPI) feature in Mode A and Mode S;

g. Means of inhibiting the transmission of altitude information. (behavior dependent on the Hijack Mode of the transponder);

(1). Transponder in Non-Hijack Mode

Means of inhibiting the transmissions of the altitude information, while retaining the framing pulses in Mode C replies and while transmitting all ZEROs in the altitude field of Mode S replies when **NOT** in the Hijack Mode (2.7).

© EUROCAE, 2003

(2). Transponder in Hijack Mode

No method shall be capable of placing the transponder in a mode that inhibits the transmission of altitude information when in the Hijack Mode (2.7) and in the airborne state (3.17.1 b (3), 3.21.2.6.5, 3.20.2.7 b and 3.20.2.7 c) except as specified in 2.7.3.1.1 b.

h. If the aircraft uses a flight number for aircraft identification, a means shall be provided for the variable aircraft identification to be inserted by the pilot.

NOTE 1: *For testing purposes only, a means of inhibiting the squitter function will need to be provided.*

NOTE 2: *Transponders equipped for extended squitter operation should have a means to disable acquisition squitters when extended squitters are being emitted. This will facilitate the suppression of acquisition squitters if all ACAS units have been converted to receive the extended squitter*

NOTE 3: *At a future date, yet to be decided, the short acquisition squitter may be inhibited when the extended squitter is being used.*

The transponder shall be capable of accepting an input indicating that the aircraft is either « airborne » or « on the ground ». If the aircraft installation cannot automatically provide this input, it shall be permanently set to the « airborne » state.

2.6 ANTENNA / TRANSPONDER CONFIGURATIONS

When implementing the Hijack Mode (2.7), a means shall be provided to distinguish to the transponder that the installation is primarily configured either as described in 2.6.a or as described in 2.6.b.

NOTE: *Such means may be provided by the use of different transponder part numbers, program pins, installation setup or configuration menus, or other acceptable means.*

a. Dual Antenna Systems and Dual Diversity Transponders

The installation is configured with an independent set of antennas (e.g., top and bottom) for each diversity transponder.

While in the Hijack Mode (2.7), a Dual Antenna System and Dual Diversity Transponder configuration shall operate in a manner that insures that only one system is radiating from the aircraft at a given time.

NOTE: *In order to do so, the Dual Antenna System and Dual Diversity Transponder configuration requires that the transponders operate in accordance with section 2.7.2.1, 2.7.2.2, 2.7.2.3, 2.7.3.2, and 2.7.4.2.*

b. Single Antenna System and Dual Diversity Transponders

The installation is configured with a single set of antennas (e.g., top and bottom) that is switched between two diversity transponders.

While in the Hijack Mode (2.7) a Single Antenna System and Dual Diversity Transponders configuration shall operate in a manner that insures that only one transponder is coupled to the radiating antenna system at a given time.

NOTE: *In order to do so, the Single Antenna System and Dual Diversity Transponder configuration requires that the transponders operate in accordance with section 2.7.2.1, 2.7.2.2, 2.7.2.3, 2.7.3.2, and 2.7.4.2.*

© EUROCAE, 2003

c. Other Configurations

(1) Dual Antenna Systems and Dual Non-Diversity Transponders

The installation is configured with an independent bottom antenna for each transponder.

In terms of indicating Antenna / Transponder configuration to the transponder, this configuration shall be considered to be the same as the Dual Antenna Systems and Dual Diversity Transponder configuration identified in subparagraph 2.6.a.

(2) Single Antenna and Dual Non-Diversity Transponders

The installation is configured with a single bottom antenna that is switched between two transponders.

In terms of indicating Antenna / Transponder configuration to the transponder, this configuration shall be considered to be the same as the Single Antenna System and Dual Diversity Transponder configuration identified in subparagraph 2.6.b.

(3) All Other Antenna / Transponder Configurations

In terms of indicating Antenna / Transponder configuration to the transponder, all other configurations that are not consistent with 2.6.a, 2.6.b, 2.6.c.(1), or 2.6.c.(2) shall be considered to be the same as the Single Antenna System and Dual Diversity Transponder configuration identified in subparagraph 2.6.b.

NOTE: *The single antenna system and single diversity transponder is included in this configuration type.*

2.7 MODE S TRANSPONDER HIJACK MODE

The support of the Hijack Mode is optional in Mode S transponders. When it is supported the reqirements in this section shall apply.

2.7.1 General

The following requirements address the implementation of the Hijack Mode via the Mode-S Transponder upon being commanded to enter the mode via Flight Crew Control functions (2.5) or discrete inputs as identified in the subsequent paragraphs. The following requirements do **NOT** preclude implementation of the Hijack Mode function within existing transponder system installations using appropriate control components or functions which are fully external to the transponder unit itself.

2.7.2 Hijack Mode Entry Procedures

NOTE 1: *The term "Active On", introduced in the following subparagraphs, refers to the state where the transponder is not in the Hijack Mode nor the Standby state. Refer to section 2.5 e. which specifies the Standby state and thereby implies the Normal state which is equivalent to the Active On state.*

NOTE 2: *The terms "Active Hijack" mode and "Standby Hijack" mode, introduced in the following subparagraphs, refers to two different modes of operation as described below. The term "Hijack Mode" is a generic term and refers to both the Active Hijack Mode and the Standby Hijack Mode of the transponder.*

© EUROCAE, 2003

2.7.2.1 Standard "7500" Code Entry

Upon continuous receipt (or selection) of 4096 Identity Code **"7500"** (see 2.5 a. and 3.17.1 b (2)) for a minimum period of **10** seconds, transponders shall operate depending upon the intended configuration and the initial state of the unit as follows:

NOTE: *The period of 10 seconds applies to "as seen by the transponder". Any additional latency that is applied by the control function that is providing the "7500" code must be taken into consideration at the installed system level.*

2.7.2.1.1 Dual Antenna Systems and Dual Diversity Transponder Configuration

Transponders intended for Dual Antenna Systems and Dual Diversity Transponder configuration (see 2.6 a) shall operate as follows:

a. The Active On transponder shall enter the Active Hijack Mode.

b. The Standby transponder shall enter the Standby Hijack Mode

2.7.2.1.2 Single Antenna System and Dual Diversity Transponder Configuration

Transponders intended for Single Antenna System and Dual Diversity Transponder configurations (see 2.6 b) shall operate as follows:

a. The Active On transponder shall enter the Active Hijack Mode.

b. The Standby transponder shall enter the Active Hijack Mode.

NOTE: *For Single Antenna Set – Dual Diversity Transponder Configurations a means should be provided to ensure that the Standby transponder will not cause adverse emission effects on-board the aircraft This may be implemented by having the transponder "check" if there is an antenna actually connected before transmitting in the Active Hijack Mode or ensuring that the standby transponder antenna ports are properly terminated.*

2.7.2.2 "7500" Code Entry with SPI

Upon receipt (or selection) of 4096 Identity Code "7500" (see 2.5 a and 3.17.1 b (2)) and activation of the Special Position Identifier (SPI, Ident.) (see 2.5 f and 3.17.1 b (4)) being coincident in any order, transponders shall operate depending upon the intended configuration and the initial state of the unit as follows:

NOTE: *The requirement is written with any coincidence or order between the "7500" Identity Code and the SPI since some controls immediately send the 4096 Identity Code upon activation of the SPI. Other controls may add latency to the code entry but not the SPI. Still other installations may implement a separate SPI activation such as a remotely activated discrete that is not a direct function of the Control Panel.*

2.7.2.2.1 Dual Antenna Systems and Dual Diversity Transponder Configuration

Transponders intended for Dual Antenna Systems and Dual Diversity Transponder configurations (see 2.6 a) shall operate as follows:

a. The Active On transponder shall immediately enter the Active Hijack Mode.

b. The Standby transponder shall immediately enter the Standby Hijack Mode

© EUROCAE, 2003

2.7.2.2.2 Single Antenna System and Dual Diversity Transponder Configuration

Transponders intended for Single Antenna System and Dual Diversity Transponder configurations (see 2.6 b) shall operate as follows:

a. The Active On transponder shall immediately enter the Active Hijack Mode.

b. The Standby transponder shall immediately enter the Active Hijack Mode.

2.7.2.3 Hijack Mode Discrete Initialization.

a. The transponder shall provide for a discrete input to allow Hijack mode activation.

b. De-bounce time necessary to verify that the discrete was properly activated shall **NOT** exceed 1.0 seconds.

c. Upon detection of the discrete input, transponders shall operate depending upon the intended configuration and the initial state of the unit as follows:

2.7.2.3.1 Dual Antenna Systems and Dual Diversity Transponder Configuration

Transponders intended for Dual Antenna Systems and Dual Diversity Transponder configurations (see 2.6 a) shall operate as follows:

a. The Active On transponder shall immediately enter the Active Hijack Mode.

b. The Standby transponder shall immediately enter the Standby Hijack Mode.

2.7.2.3.2 Single Antenna System and Dual Diversity Transponder Configuration

Transponders intended for Single Antenna System and Dual Diversity Transponder configurations (see 2.6 b) shall operate as follows:

a. The Active On transponder shall immediately enter the Active Hijack Mode.

b. The Standby transponder shall immediately enter the Active Hijack Mode.

2.7.3 Active Hijack Mode Operations

NOTE: *Special consideration for installed equipment configurations are addressed in section 6, "Installed Equipment Performance".*

2.7.3.1 General Requirements (Airborne and On-Ground states)

Upon entry of the Active Hijack Mode, both an Airborne unit and an On-Ground unit shall :

a. Enter 4096 Identity Code "7500" into all Mode-A (see 3.17.1 b (2) and 3.5.2) replies and into the ID (see 3.18.4.14) field of DF = 5, DF = 21 Mode-S replies.

b. Set the SPI (see 3.5.3) active in all Mode-A replies for a period of 18 +/- 1 seconds.

c. Accept no further transponder control information.

NOTE: *The typical Control functions implemented for the transponder include but are not limited to Standby/On selection, Altitude Reporting selection, SPI initiation, 4096 Identity Code selection, Altitude Data Source selection, Transponder "1/2" selection, and Functional Test activation.*

© EUROCAE, 2003

d. Remain in Active Hijack Mode until the Hijack Mode Exit procedure is performed (see subparagraph 2.7.6 and specifically 2.7.6.2).

e. Establish the Alert Condition in accordance with section 3.20.2.7.

f. Establish the Flight Status, "FS", field in accordance with section 3.18.4.12.

g. Continue to emit squitter transmissions.

2.7.3.1.1 Altitude Reporting Requirements

a. Valid Altitude Information Available:

When in the Active Hijack Mode both an Airborne transponder and an On Ground transponder shall continually provide the transmission of valid altitude information (see 2.5 g (2)) in all replies to interrogations required by 2.5 d and 2.5 g regardless of flight crew or other commands that may attempt to inhibit the reporting of altitude data.

b. Invalid Altitude Information:

When in the Active Hijack Mode, invalid altitude information shall result in both an Airborne transponder and an On Ground transponder continuing to:

(1) Provide Mode C replies with Framing Pulses only

(2) Provide Mode S replies with all ZERO's in the altitude field

2.7.3.1.2 TCAS Communication Requirements (if TCAS equipped)

When in the Active Hijack mode, the transponder shall continue to support all TCAS operations as required with the following exceptions:

a. The transponder shall set the Sensitivity Level Control sent to the on-board TCAS to a maximum capability of "TA Only" mode. The following constraints shall apply:

(1). If the Sensitivity Level Control (SLC) received by the transponder from its associated Control function is set to indicate a mode that is less than the "TA/RA" mode (i.e., SL = 1 or 2) then the same SLC shall be provided to the on-board TCAS.

(2). If the Sensitivity Level Control received from the Control function is set to TA/RA mode, then it shall be changed to TA Only (i.e., SL = 2) prior to the transponder providing it to the on-board TCAS.

NOTE 1: *ARINC-735A, Attachment 6D provides the following definition for Manual Sensitivity Level Control via the ARINC-429 Label "016" TCAS, Mode-S, and TA/RA Display control word.*

Manual Sensitivity Level Control						
BITS						
17	16	15	MEANING			
0	0	0	SL	=	0	(AUTOMATIC)
0	0	1	SL	=	1	(STANDBY)
0	1	0	SL	=	2	(TA ONLY)
0	1	1	SL	=	3	
1	0	0	SL	=	4	
1	0	1	SL	=	5	
1	1	0	SL	=	6	
1	1	1	SL	=	7	

NOTE 2: *SL = 0 may not be used by all control functions.*

© EUROCAE, 2003

b. The transponder shall set the 4096 Identity Code sent to the on-board TCAS to the code of "7500" at all times while in the Active Hijack Mode.

NOTE: *This action should be performed as it may be advantageous in the future to advise the on-board TCAS that the transponder system is set to the Hijack mode.*

2.7.3.2 On-Ground State Only

The transponder shall continue to operate in accordance with 2.5 d when in the Active Hijack Mode and in the On-Ground state (3.17.1 b (3), 3.21.2.6.5, 3.20.2.7 b and 3.20.2.7 c).

2.7.3.3 Loss of Control

Once in the Active Hijack Mode, the transponder shall ensure that it remains in the Active Hijack mode even if all communication is lost with the Control function. Specifically, the transponder shall **NOT** enter the Active On, Standby or Standby Hijack modes upon determining that it is no longer receiving control information.

NOTE: *TCAS System installations require that the transponder pass control information to the TCAS Computer "AS RECEIVED". Loss of control information to the transponder will result in loss of control information to the TCAS Computer which in turn may result in a "TCAS System Fail" indication to the operator.*

2.7.4 Standby Hijack Mode Operations

2.7.4.1 General Requirements (Airborne and On-Ground states)

Upon entry of the Standby Hijack Mode, both an Airborne unit and a unit on the Ground shall:

a. Accept no further transponder control information.

NOTE: *The typical Control functions implemented for the transponder include but are not limited to Standby/On selection, Altitude Reporting selection, SPI initiation, 4096 Identity Code selection, Altitude Data Source selection, Transponder "1/2" selection, and Functional Test activation.*

b. **NOT** reply to Mode A/C interrogations.

c. **NOT** reply to Mode S interrogations.

d. **NOT** emit squitter transmissions.

e. Remain in Standby Hijack Mode until the Hijack Mode Exit procedure is performed (see subparagraph 2.7.6 and specifically 2.7.6.2). Specifically, the transponder shall **NOT** be capable of exiting the Standby Hijack Mode and entering the Active Hijack or the Active ON Mode.

2.7.4.2 TCAS Communication Requirements (if TCAS equipped)

When in the Standby Hijack mode, the transponder shall continue to support all TCAS operations as required with the following exceptions:

a. The transponder shall set the Sensitivity Level Control sent to the on-board TCAS to a maximum capability of TA Only mode. The following constraints shall apply:

(1) If the Sensitivity Level Control (SLC) received by the transponder from its associated Control function is set to indicate a mode that is less than the TA/RA mode (i.e., SL = 1 or 2) then the same SLC shall be provided to the on-board TCAS.

© EUROCAE, 2003

(2) If the Sensitivity Level Control received from the Control function is set to TA/RA mode, then it shall be changed to TA Only (i.e., SL = 2) prior to the transponder providing it to the on-board TCAS.

NOTE 1: *ARINC-735A, Attachment 6D provides the following definition for Manual Sensitivity Level Control via the ARINC-429 Label "016" TCAS, Mode-S, and TA/RA Display control word.*

Manual Sensitivity Level Control						
BITS						
17	16	15	MEANING			
0	0	0	SL	=	0	(AUTOMATIC)
0	0	1	SL	=	1	(STANDBY)
0	1	0	SL	=	2	(TA ONLY)
0	1	1	SL	=	3	
1	0	0	SL	=	4	
1	0	1	SL	=	5	
1	1	0	SL	=	6	
1	1	1	SL	=	7	

NOTE 2: *SL = 0 may not be used by all control functions.*

b. The transponder shall set the 4096 Identity Code sent to the on-board TCAS to the code of "7500" at all times while in the Standby Hijack Mode.

NOTE: *This action should be performed as it may be advantageous in the future to advise the on-board TCAS that the transponder system is set to the Hijack mode.*

2.7.4.3 Loss of Control

Once in the Standby Hijack Mode, the transponder shall ensure that it remains in the Standby Hijack mode even if all communication is lost with the Control function. Specifically, the transponder shall **NOT** enter the Standby, Active On, or Active Hijack modes upon determining that it is no longer receiving control information.

NOTE: *TCAS System installations require that the transponder pass control information to the TCAS Computer "AS RECEIVED". Loss of control information to the transponder will result in loss of control information to the TCAS Computer which in turn may result in a "TCAS System Fail" indication to the operator.*

2.7.5 Hijack Mode Indication

a. A means shall be provided to indicate that the transponder is in the Active Hijack Mode.

b. A means shall be provided to indicate that the transponder is in the Standby Hijack Mode for transponders intended for installation in the Dual Antenna Systems and Dual Diversity Transponder configuration.

NOTE: *The Standby Hijack Mode indication is required to give some indication that the transponder is in that mode. Otherwise, it would be impossible to verify that the transponder exits the mode upon proper execution of the exit procedures.*

c. Momentary power interrupts shall **NOT** cause the indication described in subparagraph 2.7.5 a. to give a false indication that the Active Hijack Mode is active.

© EUROCAE, 2003

d. Momentary power interrupts shall **NOT** cause the indication described in subparagraph 2.7.5 b. to give a false indication that the Standby Hijack Mode is active.

NOTE: *The Hijack Mode Indication is specifically not intended for flight deck implementation. Some installations may not desire an indication of the Hijack Mode: however, the transponder must be capable of providing such capability if other installations or regulatory agencies should require such indication.*

2.7.6 Hijack Mode Exit Procedures

NOTE: *Refer to 3.17.1 b (3), 3.21.2.6.5, 3.20.2.7 b, and 3.20.2.7 c for determination of Airborne or On-Ground (i.e., Surface) state.*

2.7.6.1 Airborne State

Performance of Hijack Mode Exit Procedures (2.7.6) while in the airborne state shall result in the transponder **NOT** exiting the Active Hijack Mode nor the Standby Hijack Mode.

2.7.6.2 On-Ground State

While in the On-Ground State, a means shall be provided that shall result in:

a. The Active Hijack Mode transponder exiting the Active Hijack mode.

b. The Standby Hijack transponder exiting the Standby Hijack Mode.

c. The following indications that the Hijack Mode Exit operation has successfully been accomplished.

(1) Provide a satisfactory visual indication (e.g., illuminating the Functional Test Lamp) for a minimum period of 1 second.

(2) Ensuring that the Active Hijack Mode Indication (2.7.5 a) indicates that the Active Hijack Mode is **NOT** active.

(3) Ensuring that the Standby Hijack Mode Indication (2.7.5 b) indicates that the Standby Hijack Mode is **NOT** active.

2.7.7 Power Interrupt Conditions

If the Hijack Mode Exit procedure has not been performed as per 2.7.6.2, transponders that have the capability to retain last known state information prior to a Power Off condition (e.g., Non-Volatile Memory, etc.) shall provide the capability for the transponder to return to the Active Hijack Mode or Standby Hijack Mode upon restoration of power.

2.8 EFFECTS OF TESTS

Unless otherwise stated, the design of the equipment shall be such that, during and after the application of the specified tests, no condition exists which would be detrimental to the subsequent performance of the equipment.

2.9 SOFTWARE DESIGN

Software design shall follow the guidelines specified in EUROCAE Document ED-12B " Software Considerations in Airborne Systems and Equipment Certification ". The software criticality and level will depend on the particular equipment function and application.

2.10 DATA INTERFACES

Equipment shall have suitable interface(s) for the input and output of data as required, see 3.17.

© EUROCAE, 2003

Draft change proposal [23] after WG 49 meeting 4

CHAPTER 3

MINIMUM PERFORMANCE SPECIFICATION STANDARD TEST CONDITIONS

3.1 INTRODUCTION

3.1.1 Classes of Equipment

a. Two classes of equipment are addressed in these minimum performance specifications, CLASS 1 and CLASS 2, which are defined in paragraph 1.4.2.4.

b. Unless otherwise stated, the performance criteria specified in this document apply to both classes of equipment.

3.1.2 Antenna

These minimum performance specifications assume an antenna or antennas having the characteristics defined in paragraph 3.22. When only one antenna is used, it shall be the bottom antenna.

3.1.3 Signal Levels

The specified signal levels shall exist at the antenna end of a transponder-to-antenna transmission line of loss equal to the maximum for which the transponder is designed.

NOTE: *Although it is expected that a transponder will be installed with less than the designed maximum transmission line loss, these performance specifications are based on the maximum design value.*

3.2 RECEIVER CHARACTERISTICS

3.2.1 Received Interrogation Tolerances

The equipment shall meet all criteria of this minimum operational performance specification with interrogation signals within the tolerance range defined in paragraph 1.6.

NOTE: *Although receiver characteristics for frequency and bandwidth in paragraphs 3.2.2 to 3.2.4 are specified in terms of Mode A/C interrogations and replies, the specifications are adequate for both Mode A/C and Mode S interrogations.*

3.2.2 Sensitivity Variation with Frequency

The RF input level needed to produce 90% Mode A or Mode C replies shall not vary by more than 1 dB and shall at no time exceed a level of -69 dBm for standard interrogation signals in the frequency range of 1 029.8 to 1 030.2 MHz.

3.2.3 Bandwidth

The level of an interrogation signal needed to trigger the transponder at frequencies below 1 005 MHz and above 1 055 MHz shall be at least 60 dB above the level needed to trigger the transponder at 1 030 MHz with the same reply efficiency.

NOTE: *There is no requirement to test the 3 dB bandwidth and the skirt ratio. However, it can be shown that a 3 dB bandwidth of 6 MHz and a 40 dB bandwidth of 30 MHz will be optimum for Mode S performance in the presence of Mode A/C interference and will be near optimum for Mode A/C performance.*

© EUROCAE, 2003

3.2.4 Sensitivity and Dynamic Range

a. The Minimum Triggering Level (MTL) for Mode A/C and Mode A/C/S All-Call interrogations, having equal amplitude P1 and P3 pulses and P2 not detected shall be -73 dBm, ±4 dB.

b. The MTL for Mode S (P6 type) interrogations shall be -74 dBm, ±3 dB.

c. The reply ratio shall be at least 99% for all Mode S (P6 type) interrogations at signal levels between MTL+3dB and -21 dBm.

d. The reply ratio shall not be more than 10% for interrogations at signal levels equal to or below -81 dBm.

e. The variation of the MTL between Mode A and Mode C interrogations shall not exceed 1 dB.

f. The reply ratio shall be at least 90% for Mode A/C and Mode A/C/S All-Call interrogations between MTL + 3 dB and -21 dBm.

3.3 TRANSMITTER CHARACTERISTICS

3.3.1 Reply Transmission Frequency

The carrier frequency of reply transmissions shall be 1 090 ±1 MHz.

3.3.2 Transmitter Reply Spectrum

The spectrum of the transponder transmitter output shall not exceed the limits shown in Table 3.1 and Figure 3.1.

Frequency Difference from Carrier (MHz)	Maximum Relative Response from Peak
≥ 1.3 and < 7	-3 dB
≥ 7 and < 23	-20 dB
≥ 23 and < 78	-40 dB
> 78	-60 dB

TABLE 3.1: TRANSPONDER REPLY SPECTRUM

3.3.3 RF Peak Output Power

The RF peak output power of each pulse of each reply at the terminals of the antenna shall be as follows.

a. CLASS 1 Equipment

Minimum RF peak power: 21.0 dBW (125 W).

Maximum RFpeak power: 27.0 dBW (500 W).

b. CLASS 2 Equipment

Minimum RF peak power: 18.5 dBW (70W).

Maximum RF peak power: 27.0 dBW (500 W).

3.3.4 Residual Power Output

When the transponder transmitter is in the inactive state, the RF output power at 1 090 ±3 MHz, at the terminals of the antenna shall not exceed -50 dBm, except in

© EUROCAE, 2003

transponders intended for use with ACAS where it shall not exceed -70 dBm. (See paragraph 3.23~~3.23~~ f).

NOTE: *The inactive state is defined as the entire period between transmissions, less 10 µs transition periods preceding the first pulse and following the last pulse of the transmission.*

3.4 REPLY RATE CAPABILITY

All the reply rates mentioned in this section shall be in addition to any squitter transmissions that the transponder is required to make.

3.4.1 Reply Rate Capability - Mode A/C

a. CLASS 1 Equipment

CLASS 1 equipment shall be capable of at least 1 200 Mode A/C replies per second for a 15-pulse coded reply (including 2 framing pulses, 12 information pulses and the SPI pulse).

b. CLASS 2 Equipment

CLASS 2 equipment shall be capable of at least 1 000 Mode A/C replies per second for a 15-pulse coded reply (including 2 framing pulses, 12 information pulses and the SPI pulse).

3.4.2 Reply Rate Capability - Mode S

The total reply rate over each time interval specified below, shall be the sum of the individual Mode A/C replies at an average rate of 500 per second and the Mode S reply rate over that interval.

a. Short DF Reply Rates

A transponder equipped for only short Mode S Downlink Formats (DF), shall have the following minimum reply rate capabilities.

(1) 50 Mode S replies in any one-second interval;

(2) 18 Mode S replies in a 100-millisecond interval;

(3) 8 Mode S replies in a 25-millisecond interval;

(4) 4 Mode S replies in a 1.6-millisecond interval.

b. Long DF Reply Rates

A transponder equipped for long Mode S reply formats shall be able to transmit as long replies,

(1) at least 16 of the 50 Mode S replies in any one-second interval;

(2) at least 6 of the 18 Mode S replies in a 100-millisecond interval;

(3) at least 4 of the 8 Mode S replies in a 25-millisecond interval;

(4) at least 2 of the 4 Mode S replies in a 1.6-millisecond interval.

3.4.3 Mode S ELM Peak Reply Rate

A transponder equipped for ELM downlink operations shall have the capability of transmitting, at least once every one second, in a 25-millisecond interval, 25% more segments than have been announced in the initialisation (i.e. at least 20 long replies for transponders capable of handling the maximum of 16 segments).

NOTE 1: *The specification for 25% surplus transmitting capability is derived from the possible need for re-transmission.*

© EUROCAE, 2003

NOTE 2: *Transponders may exist which have a declared capability of transmitting less than the maximum number of Comm-D segments in one burst. These shall also have a surplus transmitting capacity of 25%.*

3.5 MODE A/C REPLIES

3.5.1 Mode A/C Framing Pulses

The reply function shall use two framing pulses nominally spaced 20.3 µs apart.

3.5.2 Mode A/C Information Pulses

The designators of the information pulses and their positions from the first framing pulse (F1) are as follows.

PULSE	POSITION
C1	F1+1.45 µs
A1	F1+2.90 µs
C2	F1+4.35 µs
A2	F1+5.80 µs
C4	F1+7.25 µs
A4	F1+8.70 µs
X	F1+10.15 µs
B1	F1+11.60 µs
D1	F1+13.05 µs
B2	F1+14.50 µs
D2	F1+15.95 µs
B4	F1+17.40 µs
D4	F1 + 18.85 µs

3.5.3 Mode A/C Special Position Identification (SPI) Pulse

a. In addition to the information pulses, a SPI pulse, which may be used with any of the other information pulses upon request, shall be provided at a spacing 4.35 µs following the last framing pulse of Mode A replies only.

b. The SPI pulse shall only be initiated by an IDENT switch.

c. Upon activation of the IDENT switch, the SPI pulse shall be transmitted when replying to Mode A interrogations for a period of 18 ±1.0 seconds.

3.5.4 Mode A/C Reply Pulse Shape

a. All reply pulses including SPI pulses shall have the following characteristics.

Duration: 0.45 ±0.1 µs.

Rise Time: Between 0.05 and 0.1 µs.

Decay Time: Between 0.05 and 0.2 µs.

b. The rise and decay times may be less than as specified in paragraph 1.6.3 a. provided that the sideband radiation is no greater than that which would be produced theoretically by a trapezoidal wave having the stated rise and decay times.

c. The reply spectrum specification of paragraph 3.3.2 is an acceptable specification for meeting Mode A/C minimum rise and decay times.

© EUROCAE, 2003

d. The pulse amplitude variation of one pulse, with respect to any other pulse in a reply train, shall not exceed 1 dB.

3.5.5 Mode A/C Reply Pulse Position Tolerance

a. The pulse position tolerance for each pulse (including the last framing pulse) with respect to the first framing pulse of the reply group shall be ±0.1 µs.

b. The pulse position tolerance of the SPI pulse with respect to the last framing pulse of the reply group shall be ±0.1 µs.

c. The pulse position tolerance of any pulse in the reply group with respect to any other pulse (except the first framing pulse) shall be ±0.15 µs.

3.5.6 Mode A/C Coding

a. Pressure Altitude (Mode C)

(1) All equipment shall have the capability for pressure altitude transmission, in response to Mode C interrogations.

(2) Altitude information provided to the transponder shall comply with the relevant paragraphs of ICAO Annex 10, Volume IV.

(3) When operated with a pressure altitude encoder or an air data system, the transponder shall have the capability for pressure altitude transmission up to the maximum operating altitude of the aircraft to which it is to be fitted. See also paragraph 2.5 .

(4) The transponder shall have the capability to inhibit the information pulses in the Mode C reply.

b. 4096 Identification Code

(1) In response to a Mode A interrogation, the transponder shall reply with a pilot-selectable identification code.

(2) The code designation shall consist of digits between 0 through 7, and shall consist of the sum of the postscripts of the information pulse numbers defined in paragraph 3.5.2~~3.5.2~~, used as follows:

Digit	Pulse Group
First	A
Second	B
Third	C
Fourth	D

Example: Code 3615 will consist of:

Group	Bits	Value
A	A1, A2	1 + 2 = 3
B	B2, B4	2 + 4 = 6
C	C1	1 = 1
D	D1, D4	1 + 4 = 5

3.6 MODE S REPLIES (SEE FIGURE 3-2)

The Mode S reply data block is formed by pulse position modulation (PPM) encoding of the reply data at the rate of 1 Mb/s. A pulse transmitted in the first half of the interval represents a ONE while a pulse transmitted in the second half represents a ZERO.

© EUROCAE, 2003

3.6.1 Mode S Reply Preamble

a. The preamble shall consist of four 0.5 ±0.05 µs, pulses.

b. The second, third and fourth pulses shall be spaced 1.0, 3.5 and 4.5 µs respectively from the first transmitted pulse.

c. The position tolerance shall be in accordance with paragraph 3.6.5.

3.6.2 Mode S Reply Data Pulses

a. The block of reply data pulses shall begin 8.0 µs after the first transmitted pulse.

b. Either 56 or 112 one-microsecond intervals shall be assigned to each transmission.

c. A pulse with a width of 0.5 ±0.05 µs shall be transmitted either in the first or in the second half of each interval.

d. If a pulse transmitted in the second half of one interval is followed by another pulse transmitted in the first half of the next interval, the two pulses shall merge in a 1.0 ±0.05 µs pulse.

3.6.3 Special Position Identification (SPI)

a. When manually activated, the SPI condition is indicated in the FS field of Mode S replies (DF = 4, 5, 20 and 21).

b. This information shall be present for a period of 18 ±1.0 seconds, after activation.

3.6.4 Mode S Reply Pulse Shape

a. All Mode S reply pulses shall have the following characteristics.

Duration:	See paragraph 3.6.2 c.
Rise time:	Between 0.05 and 0.1 µs.
Decay time:	Between 0.05 and 0.2 µs.

b. The pulse amplitude variation between one pulse and any other pulse in a reply shall not exceed 2 dB.

3.6.5 Mode S Reply Pulse Intervals

a. Mode S reply pulses shall start at a defined multiple of 0.5 µs from the first transmitted pulse of the preamble.

b. The pulse position tolerance shall be ±0.05 µs, measured from the first transmitted pulse of the preamble.

3.7 REPLY DELAY AND JITTER

3.7.1 Mode A/C Reply Delay and Jitter

a. At all RF input levels from MTL to -21 dBm, the time delay between the arrival at the transponder input of the leading edge of P3 and the transmission of the leading edge of the first pulse of the reply shall be 3.0 ±0.5 µs.

b. At all RF input levels from MTL+3dB to -21 dBm, the jitter at the leading edge of the first pulse of the reply with respect to P3 shall not exceed 0.1 µs.

c. At all RF input levels from MTL+3dB to -21 dBm, the time delay variations between Modes A and C shall not exceed 0.2 µs.

© EUROCAE, 2003

3.7.2 Mode S Reply Delay and Jitter

a. Mode S Interrogation

(1) At all RF input levels from MTL to -21 dBm, the first preamble pulse of the reply shall occur 128 ±0.25 µs, after the sync phase reversal of the received P6 of a Mode S interrogation.

(2) At all RF input levels from MTL to -21 dBm, the jitter of the reply delay shall not exceed 0.08 µs, peak (99.9 percentile).

b. Mode A/C/S All-Call

(1) At all RF input levels from MTL to -21 dBm, the first preamble pulse of the reply shall occur 128 ±0.5 µs, after the P4 pulse of the Mode A/C/S All-Call interrogation.

(2) At all RF input levels from MTL+3dB to -21 dBm, the jitter of the reply delay shall not exceed 0.1 µs peak (99.9 percentile).

3.8 SIDE LOBE SUPPRESSION CHARACTERISTICS

3.8.1 General

a. The suppression period is defined as the time between the P2 pulse initiating the suppression and the P1 pulse of the earliest subsequent interrogation to which the transponder replies. The duration shall be between 25 and 45 µs for all Mode A/C and Mode A/C/S All-Call Modes.

b. The side lobe suppression period shall begin after receipt of the leading edge of P2.

c. The side lobe suppression period shall be capable of being re-initiated within 2 µs after the end of any suppression period.

d. The receiver sensitivity for Mode A/C signals shall be at MTL not later than one microsecond after the end of the suppression period.

e. The two-pulse sidelobe suppression pair shall initiate suppression in a Mode S transponder regardless of the position of the pulse pair in a group of pulses, provided that the transponder is not already suppressed or in a transaction cycle.

f. A transponder in suppression shall not recognise Mode A, Mode C or intermode interrogations if either the P1 pulse alone or both the P1 and P3 pulses of the interrogation are received during the suppression interval. Suppression shall not affect the recognition of, acceptance of, or replies to Mode S interrogations.

3.8.2 Side Lobe Suppression, Mode A/C, Mode A/C-Only All-Call, and Mode A/C/S All-Call

Assuming no lock-out condition is in effect, the transponder shall react to side lobe interrogations as follows.

a. Conditions Under Which the Transponder SHALL Be Suppressed

The transponder shall reply to no more than 10% of the interrogations if

(1) the pulse interval between P1 and P2 is varied over the range from 1.85 to 2.15 µs, and

(2) the RF input signal level of P1 is varied from MTL+3dB to -21 dBm, and

(3) the level of P2 equals or exceeds the level of P1.

© EUROCAE, 2003

NOTE: *The transponder will enter suppression if the P1 and P2 preamble pulses of a Mode S interrogation are detected, but a sync phase reversal is not recognised. This requirement prevents the transponder from generating unwanted Mode A and/or Mode C replies to Mode S interrogations that are sidelobe suppressed.*

b. Conditions Under Which the Transponder SHALL NOT Be Suppressed

The transponder shall reply to at least 90% of the interrogations over the input signal level range of from MTL+3dB to -21 dBm, if

(1) the level of P1 exceeds the level of P2 by 9 dB or more, or

(2) no pulse is received at the position 2.0 ±0.7 µs, following P1, or

(3) the duration of P2 is less than 0.3 µs.

c. Conditions Under Which The Transponder SHALL NOT Reply, But May Initiate Suppression.

(1) The transponder shall not reply with more than a 10% reply rate over the RF input level range from MTL to MTL+3dB, if the amplitude of P2 equals or is greater than the amplitude of P1.

(2) Under the same conditions, the transponder may or may not initiate suppression.

d. Simultaneous Recognition of Suppression and Mode A or Mode C

If a P1-P2 suppression pair and a Mode A or Mode C interrogation are recognised simultaneously, the transponder shall be suppressed.

3.8.3 Side Lobe Suppression, Mode S Formats

a. Side lobe suppression for Mode S formats is characterised by the reception of P5 overlaying the location of the sync phase reversal of P6.

b. Given an interrogation which would otherwise require a reply, the transponder shall

(1) have a reply ratio of less than 10% at all signal levels between MTL+3dB and -21 dBm, if the received amplitude of P5 exceeds the received amplitude of P6 by 3 dB or more;

(2) have a reply ratio of at least 99% at all signal levels between MTL+3dB and -21 dBm, if the received amplitude of P6 exceeds the received amplitude of P5 by 12 dB or more.

NOTE: *The P5 pulse inhibits recognition of the sync phase reversal so that further decoding of the interrogation does not take place. There is, therefore no reply, but the transponder does not enter the suppression state.*

3.9 PULSE DECODER CHARACTERISTICS

3.9.1 General

Unless otherwise specified, the following pulse decoder characteristics shall apply over the RF input signal level range from MTL+1dB to -21 dBm, with nominal interrogation signal characteristics.

a. Valid interrogations shall result in at least 90% replies.

b. Interrogations which are not valid shall result in less than 10% replies.

© EUROCAE, 2003

3.9.2 Pulse Level Tolerances

a. Mode A/C/S All-Call interrogations

If the equipment receives a valid Mode A/C interrogation at any signal level from MTL+1dB to -21 dBm, followed by a long P4 pulse~~ in the P4 position with its trailing edge between 3.3 and 4.2 µs after P3~~:

(1) it shall accept the interrogation as a Mode A/C/S All-Call interrogation if the received amplitude of the long P4 is greater than the amplitude of P3 minus 1 dB;

(2) it shall accept the interrogation as a Mode A/C interrogation if the received amplitude of a ~~short~~ long P4 is less than the amplitude of P3 minus 6 dB.

b. Mode A/C-Only All-Call interrogations

If the equipment receives a valid Mode A/C interrogation at any signal level from MTL+1dB to -21 dBm, followed by any pulse in the P4 position with ~~its trailing edge~~a pulse width less than ~~3.3~~1.2 µs after P3,

(1) it shall accept the interrogation as a Mode A/C interrogation if the received amplitude of P4 is less than the amplitude of P3 minus 6 dB;

(2) it shall not accept the interrogation if the received amplitude of any P4 is greater than P3 minus 1 dB.

3.9.3 Pulse Position Tolerances

a. Mode A/C Interrogations - Acceptance

The equipment shall accept the pulse ~~position~~ interval of Mode A/C interrogations as valid if the spacing between P1 and P3 is within ±0.2 µs of the nominal spacing.

b. Mode A/C/S All-Call Interrogations - Acceptance

The transponder shall accept the pulse ~~positions~~ intervals of Mode A/C/S All-Call interrogations as valid if the spacing between P1 and P3 is within ±0.2 µs of the nominal ~~spacing~~ interval and if the ~~spacing~~ interval between P3 and P4 is within ±0.05 µs of nominal.

c. Mode A/C, Mode A/C/S All-Call and Mode A/C-Only All-Call Interrogations - Non-Acceptance (P1 - P3)

The transponder shall not accept the pulse ~~position~~ interval of Mode A/C, Mode A/C/S All-Call and Mode A/C-Only All-Call interrogations as valid if the ~~spacing~~ interval between P1 and P3 differs from the nominal ~~spacing~~ interval by 1.0 µs or more.

d. Mode A/C/S All-Call interrogations - Non-Acceptance (P4)

The transponder shall not accept an interrogation as a Mode A/C/S All-Call if the leading edge of P4 is not detected within the interval from 1.7 µs to 2.3 µs following the leading edge of P3.

3.9.4 Pulse Duration Tolerances

a. Mode A/C Interrogation - Acceptance

The transponder shall accept the pulse durations of a Mode A/C interrogation as valid if the durations of both P1 and P3 are between 0.7 and 0.9 µs.

b. Mode A/C/S All-Call Interrogation - Acceptance

© EUROCAE, 2003

Draft change proposal [32] after WG 49 meeting 4

The transponder shall accept the pulse durations of a Mode A/C/S All-Call interrogation as valid if the durations of both P1 and P3 are between 0.7 µs and 0.9 µs and if the duration of P4 is between 1.5 and 1.7 µs (long P4).

© EUROCAE, 2003

c. Mode A/C/S All-Call Interrogation - Non-Acceptance (P4)

The transponder shall not accept a Mode A/C/S All-Call interrogation as valid if the duration of the P4 pulse is outside of the range between 1.2 and 2.5 µs.

d. Mode A/C or Mode A/C/S All-Call Interrogation - Non-Acceptance (P1, P3)

For all signal levels from MTL to -45 dBm, the transponder shall accept no more than 10% of Mode A/C or Mode A/C/S All-Call interrogations if the duration of either the P1 pulse or the P3 pulse is less than 0.3 µs.

3.9.5 Sync Phase Reversal Position Tolerance

a. The transponder shall determine the location of the sync phase reversal relative to either the leading edge of P2 or the leading edge of P6.

b. If the transponder determines the location of the sync phase reversal from P2,

(1) the sync phase reversal shall be accepted if it is received within the interval between 2.7 and 2.8 µs following the leading edge of P2,

(2) the sync phase reversal shall be rejected if it is received outside of the interval between 2.55 and 2.95 µs following the leading edge of P2.

(3) In the areas between the limits defined above, the transponder may or may not accept the sync phase reversal.

c. If the transponder determines the location of the sync phase reversal from P6,

(1) the sync phase reversal shall be accepted if it is received within the interval between 1.2 and 1.3 µs following the leading edge of P6;

(2) the sync phase reversal shall be rejected if it is received outside of the interval between 1.05 and 1.45 µs following the leading edge of P6.

(3) In the areas between the limits defined above, the transponder may or may not accept the sync phase reversal.

3.10 DESENSITISATION AND RECOVERY

3.10.1 Echo Suppression

a. Echo Suppression Desensitisation

(1) Upon receipt of any pulse more than 0.7 µs in duration (desensitisation pulse), the transponder shall be temporarily desensitised to all received signals by raising the receiver threshold.

(2) Immediately after the desensitisation pulse, the receiver threshold shall be between the level of the desensitisation pulse and 9 dB less than that level, except for a possible overshoot during the first microsecond following the desensitisation pulse.

b. Narrow Pulse Performance

Single pulses of less than 0.7 µs in duration need not cause a specified desensitisation, but in any case they shall not cause a desensitisation of amplitude or duration greater than permitted in paragraphs 3.10.1 a. and 3.10.2.

3.10.2 Recovery

a. Recovery Time

Following desensitisation, the receiver shall recover sensitivity to within 3 dB of MTL, within 15 µs after reception of the trailing edge of a desensitising pulse having a signal strength up to MTL+50dB.

© EUROCAE, 2003

b. Recovery Rate

Recovery shall be at an average rate not exceeding 4 dB per μs.

c. Recovery From a Mode S Interrogation If No Reply Is Required

Following a correctly addressed Mode S interrogation (other than Comm-C, Uplink Format UF=24) which has been accepted and demands no reply, a transponder shall recover sensitivity to within 3 dB of MTL no later than 45 μs after receipt of the sync phase reversal.

d. Recovery From a Mode S Comm-C Interrogation

Following a Comm-C interrogation for which no reply is required, a transponder with Comm-C capability shall recover sensitivity to within 3 dB of MTL no later than 45 μs after the receipt of the sync phase reversal.

e. Recovery From a Suppression Pair

The receipt of P1 and P2 suppression pulses may temporarily desensitise the transponder according to paragraph 3.10.2 a, but the suppression pairs shall not otherwise interfere with the reception of Mode S interrogations.

f. Recovery From a Mode S Interrogation Which Has Not Been Accepted

Following a Mode S interrogation which has not been accepted, the transponder shall recover sensitivity to within 3 dB of MTL no later than 45μs after the receipt of the sync phase reversal.

A transponder with Comm-C capability shall recover sensitivity to within 3dB of MTL no later than 45 μs after receipt of the sync phase reversal.

g. Recovery from Unaccepted Mode A/C-Mode S and Mode A/C-Only All-Calls

Following unaccepted Mode A/C - Mode S or Mode A/C-only All-Calls, the transponder shall recover sensitivity according to paragraph 3.10.2 a.

3.10.3 Dead Time

a. Mode A/C Dead Time

After recognition of a valid interrogation, the transponder shall not reply to any other interrogation, at least for the duration of the reply pulse train. This dead time shall end no later than 125 μs after the transmission of the last reply pulse of the group.

b. Mode S Dead Time

The time interval beginning at the end of a reply transmission and ending when the receiver has regained its sensitivity to within 3 dB of MTL, shall be as short as possible, but, in any case, shall not exceed 125 μs.

3.11 REPLY RATE LIMITING

Reply rate limiting in a Mode S transponder shall be separate and independent for Mode S and Mode A/C replies.

A sensitivity reduction reply rate limit control shall be incorporated in the transponder for Mode A/C replies.

Without regard to the number of pulses in each reply, the limit control shall permit adjustment to any value between 500 continuous Mode A/C replies per second and

a. 2 000 continuous replies per second, or

b. the maximum continuous reply rate capability, if less than 2 000 replies per second.

Sensitivity reduction shall apply only to Mode A/C, Mode A/C/S All-Call and Mode A/C-Only All-Call interrogations.

© EUROCAE, 2003

NOTE: *The reply rate limit control should be set at 1 200 replies per second or the maximum value below 1 200 replies per second of which the transponder is capable.*

If a reply rate limiting device is provided for Mode S replies, it shall permit at least the reply rates specified in paragraph 3.4 and shall not prevent acquisition squitter transmission as per 3.20.2.6 and extended squitter as per 3.21.2.6 nor the transmission of a DF=16 (3.21.1.4).

3.12 RESPONSE IN THE PRESENCE OF INTERFERENCE

3.12.1 Mode A and Mode C with Random Interfering Pulse

The transponder shall reply to at least 90% of the interrogations when random pulses are received 10 dB below the proper interrogation and are not recognised as P1, P2 or P3.

3.12.2 Simultaneous Interrogations of Mode A and Mode C

If a transponder recognises two valid pulse patterns simultaneously, it shall

a. enter the Mode A/C suppression state if one of the received pulse patterns is a P1-P2 suppression pair;

b. and if one of the received pulse patterns is not a P1-P2 suppression pair, then generate a valid Mode C altitude reply if either of the two received pulse patterns is a Mode C interrogation.

NOTE 1: *In a transponder equiped for diversity antenna operation, diversity channel selection takes place before all other processes.*

NOTE 2: *Simultaneous receipt of two interrogation pulse patterns can occur whenever there are two or more interrogators transmitting in the same airspace. For example, a single pulse from an interfering interrogator received 8 or 21 µs before the second pulse of a P1-P2 pair can cause the transponder to simultaneously recognise a Mode A/C interrogation and a Mode A/C suppression.*

NOTE 3: *A single interference pulse received 8 µs before the P3 pulse of a Mode C interrogation (or 21 µs before the P3 pulse of a Mode A interrogation) can cause the transponder to simultaneously recognise both interrogation patterns. When this occurs, a Mode C reply is preferred because a missing Mode A reply usually causes less degradation of transponder tracking.*

3.12.3 Low Level Asynchronous Interference

a. For the purpose of this document, asynchronous interference is defined as single 0.8 ± 0.1 µs pulses with carrier frequency of 1 030 ±0.2 MHz, incoherent with the Mode S signal carrier frequency and occurring at all repetition rates up to 10 000 Hz at a level 12 dB or more below that of the level of the Mode S signal.

b. In the presence of asynchronous interference, the transponder shall reply correctly to at least 95% reply of valid Mode S interrogations with received signal levels between -65 and -21 dBm, provided that no lockout condition is in effect.

NOTE 1: *Such pulses may combine with P1 and P2 pulses of the Mode S waveform to form a valid Mode A/C-Only All-Call waveform. The Mode S transponder shall not respond to Mode A/C-Only All-Calls but shall respond to the Mode S interrogation.*

NOTE 2: *A preceding pulse may also combine with the P2 of the Mode S waveform to form a valid Mode A or Mode C interrogation. Under such conditions, the P1-P2 pair of the Mode S preamble shall take precedence.*

© EUROCAE, 2003

3.12.4 Standard Interfering Pulse

a. A Standard Interfering Pulse is defined as a 0.8 ± 0.1 µs pulse with a carrier frequency of 1 030 ±0.2 MHz, that is incoherent with the Mode S signal of the test and that overlaps the P6 of the Mode S interrogation anywhere after the sync phase reversal.

b. Given an interrogation that demands a reply, the reply ratio of a transponder shall be at least 95% if the level of the interfering pulse is 6 dB or more less than the signal level for input signal levels between -68 and -21 dBm.

c. Under the same conditions, the reply ratio shall be at least 50% if the interference pulse level is 3 dB or more less than the signal level.

NOTE: *This condition simulates the overlay of Mode A/C pulses over the DPSK modulation of the Mode S interrogation and ensures that the demodulation function of the transponder is effective. Designs such as narrow band filters that merely detect the occurrence of a phase change will not perform satisfactorily.*

3.12.5 Pulse Pair Interference

a. The interfering signal shall consist of P1 and P2, spaced 2 µs apart, with a carrier frequency of 1 030 ±0.2 MHz, and incoherent with the Mode S signal of the test.

b. The interfering pulse pair shall overlay any part of the Mode S interrogation except that the leading edge of the P1 interfering pulse shall occur no earlier than the P1 pulse of the Mode S signal.

c. Given an interrogation that demands a reply, the reply ratio of the transponder shall be at least 90% if the level of the interfering signals is 9 dB or more less than the signal levels for signal level inputs between -68 and -21 dBm.

NOTE: *This ensures the Mode S decoding is not inhibited by the receipt of Mode A/C side lobe suppression pulse pairs.*

d. If a P1-P2 suppression pair and a Mode A or Mode C intermode interrogation are recognised simultaneously the transponder shall be suppressed.

3.12.6 TACAN/DME and other Spurious Pulse Interference

Given a Mode S interrogation that demands a reply, the reply ratio of the transponder shall be at least 90% for input signal levels between -68 and -21 dBm when either of the following signals is applied with the interrogation signal:

a. TACAN/DME signal of:

repetition rate: 3 600 pulse pairs per second (for both X and Y (12 and 30 µs) channel pulse spacings),

level:	-30 dBm,
pulse duration:	3.5 µs
frequency range:	962 to 1 020 MHz, and 1 041 to 1 213 MHz;

b. Single pulses of:

duration:	6.4 µs,
repetition rate:	2 000 pulses per second,
level:	-80 dBm,
frequency:	1 030 MHz

© EUROCAE, 2003

3.13 UNDESIRED REPLIES

The random trigger rate on Modes A and C shall not be greater than 5 replies per second, or 5 mutual suppression pulses per second, averaged over any period of at least 30 seconds.

Mode S transponders shall not generate undesired Mode S replies more often than once per 10 seconds.

3.14 SELF TEST AND MONITORS

3.14.1 Self Test

If a self-test feature or monitor is provided, the following shall apply.

a. A self-test system that:

(1) radiates test interrogation signals, or,

(2) prevents the transponder replying to valid interrogations during the test period,

shall be limited to intermittent use for a duration which is no longer than that needed to determine the transponder status.

b. The test rate for Mode A/C and Mode A/C-Only All-Call interrogations shall be 235 ±5 interrogations per second, or submultiples thereof.

c. Test interrogations using Mode S formats, including Mode A/C/S All-Call, shall not exceed one of each format for which the transponder is capable, in any given test sequence.

d. The self-test interrogation signal level at the antenna end of the transmission line shall not exceed -40 dBm.

e. If provision is made for an automatic periodic self-test procedure, such self-testing shall not radiate replies at an average rate exceeding one reply every ten seconds.

3.14.2 Squitter Monitor

a. A squitter monitor shall be provided to verify that the Mode S transponder generates short and extended squitters at a nominal rate (subparagraphs 3.20.2.6 and 3.21.2.6).

b. The equipment shall be considered FAILED when the monitor detects squitter failure.

3.14.3 Failure Indication

a. An indication shall be provided of the validity/non-validity of the equipment.

b Any failure detected by the self-test, squitter monitor or other monitoring function shall cause the indication to assume the invalid state.

c. Momentary power interruptions shall not cause indication of the invalid state.

d. ~~d.~~ The status of the equipment shall be indicated to the flight crew.

d. Failures related to the 24 bit discrete address shall generate a diagnostic error message in order to alert maintenance personnel (if a change in the 24 bit discrete address is detected or if a 24 bit discrete address consisting of all ONEs or all ZEROs is read during the power-on initialisation process).

© EUROCAE, 2003

Draft change proposal [38] after WG 49 meeting 4

3.15 MUTUAL SUPPRESSION CAPABILITY

3.15.1 Response to Mutual Suppression Pulses

If the equipment is designed to respond to mutual suppression pulses from other electronic equipment in the aircraft (to disable it while the other equipment is transmitting), the equipment shall regain normal sensitivity, within ±3 dB, not later than 15 µs after the end of the applied mutual suppression pulse.

(Editorial note – Insert new note as follows:)

Note: This document does not establish the design parameters of the mutual suppression system. However, it is recommended that all sources of mutual suppression pulses be dc coupled while sinks are ac coupled. This standardization will prevent source or sink failures from disabling all users of the mutual suppression pulses.

3.15.2 Mutual Suppression Interface

Where applicable equipment shall have the capability of interfacing with an aircraft mutual suppression bus and shall generate and respond to mutual suppression pulses (See paragraph 1.4.2.3).

3.16 DIVERSITY OPERATION

3.16.1 General

a. Where applicable Mode S transponders (see paragraph 1.4.2.5) shall be designed to operate with antenna diversity.

b. Such systems shall employ two antennas, one mounted on the top and the other on the bottom of the aircraft, separated by a maximum horizontal distance of 7.6 m.

c. Appropriate switching and signal processing channels to select the best antenna on the basis of the characteristics of the received interrogation signals shall also be provided; replies shall only be transmitted from the selected antenna.

d. Such diversity systems, in their installed configuration, shall not result in degraded performance relative to that which would have been produced by a single system having a bottom-mounted antenna.

3.16.2 Diversity Antenna Selection

a. Provided that both channels simultaneously receive valid, identical interrogations or pulse pairs, the transponder shall select one of the two antennas on the basis of the relative strengths of the detected interrogation signals at the two antennas.

b. If valid interrogations are not received simultaneously on both channels, the transponder shall select one of the antennas as described in paragraph 3.16.4.

c. If only one channel receives or accepts a valid interrogation, then that channel shall be automatically selected regardless of received signal strength.

d. The selected antenna shall be used to receive the remainder of the interrogation and, if necessary, to transmit the reply.

NOTE 1: *Optionally, antenna selection and switching may occur after the receipt of the P3 pulse of a P1-P3 pulse pair.*

NOTE 2: *Optionally, selection may be based on the correctness of a received complete Mode S interrogation. In this case, the RF port having the correct signal shall be selected. If correctness is observed in both channels, selection shall be based on relative signal strength.*

© EUROCAE, 2003

3.16.3 Signal Strength Threshold

a. For signals in the range MTL to -21 dBm the transponder shall normally select the antenna connected to the RF port having the stronger signal.

b. To allow for imbalance in the characteristics of the two channels, selection of either antenna is permitted if the difference in signal strength does not exceed 3 dB.

© EUROCAE, 2003

3.16.4 Received Signal Delay Threshold

a. If an interrogation is received at either antenna 0.125 µs or less in advance of reception at the other antenna, the selection shall be made on the basis of received signal strength.

b. If an interrogation is received at either antenna 0.375 µs or more in advance of reception at the other antenna, the antenna selected for the reply shall be the one which received the earlier interrogation.

c. If the relative time of receipt is between 0.125 and 0.375 µs, the transponder shall select the reply antenna based on either

(1) the relative signal strength, or

(2) the earlier time of arrival.

3.16.5 Diversity Transmission Channel Isolation

The peak RF power transmitted from the selected antenna shall exceed the power transmitted from the non-selected antenna by at least 20 dB.

3.16.6 Reply Delay of Diversity Transponders

The total difference in mean reply delay between the two antenna channels (including the transponder-to-antenna cables) shall not exceed 0.13 µs for interrogations of equal amplitude. This requirement is applicable to interrogation signal strengths between MTL +3 dB and -21 dBm.

NOTE: *This limits apparent jitter caused by diversity operation and by cable delay differences. The jitter specification for each individual channel remains as specified for non-diversity transponders. Control of apparent jitter caused by antenna location is specified in paragraph 6.2.8.*

3.16.7 Squitter Antenna Selection

3.16.7.1 Non-Diversity Installation

In a non-diversity installation operating with one bottom antenna only, all squitter transmissions shall be directed to that antenna.

3.16.7.2 Acquisition Squitter

Transponders operating with antenna diversity (paragraph 1.4.2.5) shall transmit acquisition squitters as follows:

a. when airborne, the transponder shall transmit acquisition squitters alternately from the two antennas; and

b. when on the surface, the transponder shall transmit acquisition squitters under control of the SAS subfield (paragraph 3.21.2.6.7). In the absence of any SAS commands, use of the top antenna only shall be the default condition.

NOTE: *Acquisition squitters shall only be transmitted on the surface if the transponder is not reporting the surface position.*

NOTE: *The surface report type may be selected automatically by the aircraft or by commands from a squitter ground station*

© EUROCAE, 2003

3.16.7.3 Extended Squitter

Transponders equipped for extended squitter and operating with antenna diversity (paragraph 1.4.2.5) shall transmit extended squitters as follows:

a. when airborne, the transponder shall transmit each type of extended squitters alternately from the two antennas; and

b. when on the surface, the transponder shall transmit extended squitters under control of the SAS subfield (paragraph 3.21.2.6.7). In the absence of any SAS commands, use of the top antenna only shall be the default condition

3.17 DATA HANDLING AND INTERFACES

3.17.1 Direct Data

Direct data are those which are part of the Mode S system surveillance protocol.

a. Fixed Direct Data

Fixed direct data characterise the aircraft and include:

(1) 24 bit Aircraft Address,

Protection of 24 Bit address bits – During the power-on initialization process, the transponder shall read in and store its 24-bit aircraft address. Thereafter, the address used by the transponder shall not change from the value stored at power-up. The transponder should continue to monitor the 24-bit aircraft address after the initial read and store at power-up. If a change in the 24-bit aircraft address is detected after the initial read and store, the transponder shall continue to use only the 24-bit aircraft address stored at power-up and shall generate a diagnostic error message in order to alert maintenance personnel to the occurrence of intermittent discrete address bit input data.~~Mode S Discrete Address,~~ If the transponder 24-bit discrete address is set to all ONEs or all ZEROs at startup then this error condition shall be indicated to the pilot and the transponder shall either transition to Standby State, Power Off Condition, or operate as a pure Mode A/C transponder. .

Note 1: This last requirement is imposed to specifically disallow Mode S transponders from operating with invalid addresses. This condition has been observed in airspace operations and it poses a number of unsafe conditions.

Note 2: If there is no other Mode S transponder active (not in Standby or a Failed condition), then ACAS will declare a "ACAS System Fail" or enter the "Standby" condition." (3.23.4 ACAS-Compatible Transponder Automatic Performance Monitoring).

Note 3: If this condition occurs at startup then the transponder should be deactivated until the condition is corrected or only be able to operate in pure Mode A/C only. Pure Mode A/C transponders reply to all P1-P3 and P1-P3-P4 interrogations with a Mode A/C reply and do not transmit any squitter.

Note 4: Accommodation should be made for those military transponders that have the capability to change the 24-bit address (e.g., so the aircraft can operate as a State aircraft with a corresponding address or as a NATO aircraft with a NATO address). However, under no conditions may such a transponder operate as a Mode S transponder if the address is invalid.

© EUROCAE, 2003

(2) ~~(2)~~ Maximum Cruising True Airspeed (aircraft's maximum normal operating airspeed),

In response to certain surveillance interrogations, the transponder shall place an encoded indication of the aircraft's maximum cruising true airspeed into bits 14-17 of the RI field. Coding is described in subparagraph 3.18.4.30.

NOTE: *Maximum Cruising True Airspeed is always fixed data and may be used for tracking purposes. The information is contained in the RI field of short air-air reply (DF0).*

(3) ~~(3)~~ Aircraft Identification Data.

If there is no interface to enter Flight Identity data the tail number or registration number of the aircraft is used to identify the aircraft for ATC purposes, it constitutes "fixed" data.

~~***NOTE:*** *If the tail number or registration of the aircraft is used to identify the aircraft for ATC purposes, it constitutes "fixed" data.*~~

b. Variable Direct Data

Variable Direct data characterise the flight condition of the aircraft and are therefore subject to dynamic changes. These changes are made either automatically, based on inputs received from sensors in the aircraft, or manually by the flight crew. They include:

(1) Pressure Altitude

When operated in conjunction with a pressure-altitude encoder (digitizer) or an air data system, the transponder shall have the capability for pressure-altitude transmission in accordance with Annex 10 up to its designed maximum altitude. Pressure altitude reports shall be referenced to a standard pressure setting of 29.92 inches Hg (1013.25 hectopascals).

(i) Mode A/C - When operated in Mode A/C, the altitude shall be transmitted in response to a Mode C interrogation, encoded in accordance with ICAO Annex 10. If altitude information is not available to the transponder, only the framing pulses required for a Mode C response shall be transmitted.

(ii) Mode S - When operated in the Mode S system, the 13-bit AC field (bits 20-32 transmitted in the short and long special surveillance reply, the altitude surveillance reply, and the altitude Comm-B reply) shall contain the encoded altitude of the aircraft in accordance with ICAO Annex 10. For aircraft with 25-foot or better pressure altitude sources, pressure altitude-information should be reported in 25-foot increments. Pressure altitude data obtained from a source with larger than 25-foot resolution shall not be reported using 25-foot increments. The altitude shall be encoded as follows:

(a) Bit 26 shall be designated as the M bit and shall be ZERO if the altitude is reported in feet. M equals ONE shall be reserved for possible future use to indicate that the altitude reporting is in metric units.

NOTE: Use of the M bit as defined here does not alter any conventions regarding the X bit in ATCRBS replies.

© EUROCAE, 2003

(b) If M equals ZERO, bit 28 shall be designated as the Q bit. Q equals ZERO shall be used to indicate that the Mode S altitude is reported in 100-foot increments as defined in c below. Q equals ONE shall be used to indicate that the altitude is reported in 25-ft increments as defined in d below.

NOTE: Bit 28 (Q) corresponds to the D1 pulse of a Mode C reply and is not used in the ATCRBS altitude code.

(c) If M and Q both equal ZERO, the altitude shall be coded according to the pattern for Mode C replies specified in ICAO Annex 10. Starting with bit 20, the sequence shall be C1, A1, C2, A2, C4, A4, ZERO, B1, ZERO, B2, D2, B4, D4.

(d) If M equals ZERO and Q equals ONE, the 11-bit field represented by bits 20 to 25, 27, and 29 to 32 shall represent a binary-coded field whose least significant bit has a value of 25 feet. The binary value of the decimal number N shall be used to report pressure altitudes in the range (25 x N - 1000 ±12.5) feet.

NOTE: The most significant bit of this field is bit 20 as required by subparagraph 2.2.1.4.2. This code is able to provide code values only between -1000 ft and +50,175 ft. The coding used for Mode C replies in c above must be used to report pressure altitudes greater than 50,175 ft.

(e) ZERO shall be transmitted in each of the 13 bits of the AC field if altitude information is not available or if the altitude has been determined to be invalid.

(2) 4096 Identification Code

In response to an ATCRBS Mode A or Mode S surveillance or Comm-A identity interrogation, the transponder shall reply with a pilot-selectable identification code. The code designation shall consist of digits between 0 and 7 inclusive, and shall consist of the sum of the postscripts of the information pulse numbers defined in subparagraph 2.2.4.1.2, employed as follows:

Digit	Pulse Group
First	A
Second	B
Third	C
Fourth	D

(3) "On the Ground" Condition

© EUROCAE, 2003

The transponder shall report the automatically determined on-the-ground state as determined by the aircraft in the Flight Status (FS), Vertical Status (VS), and Capability (CA) fields except when reporting airborne status when on-the-ground is reported to the transponder under the conditions specified in subparagraph xxxx2.2.16.2.7xx. (Ed note: Check sub para No)

NOTE : The on-the-ground state determined by the aircraft does not include the effect of any TCS commands.

(4) the presence of the Special Position Identification (SPI).

In Mode A/C, an SPI pulse shall be transmitted upon request, following a Mode A reply. In the FS field of Mode S replies, an equivalent of the SPI pulse shall be transmitted upon the same request. The code is transmitted for 18 ±1.0 seconds after initiation and can be reinitiated at any time.

(repetetive statement, ED 73 B 3.5.3)

(5) Aircraft identification Data (Flight number).

If the aircraft uses a flight number for aircraft identification, a means shall be provided for the variable aircraft identification to be inserted by the pilot.

(6) Radio Altitude Data

The radio altitude data input is used to support airborne/on-the-ground determination in installations that support automatic on-the-ground condition determination as specified in subparagraph 2.2.16.2.7. The data supports extended squitter airborne/surface format transmission selection and Flight Status (FS), Vertical Status (VS), and Capability (CA) fields as provided in subparagraphs 2.2.16.2.6.2.5, 2.2.14.4.9, 2.2.14.4.32, and 2.2.14.4.5

(Ed note: Check sub para Nos)

(7) Ground Speed Data

The ground speed data input is used to support airborne/on-the-ground determination in installations that support automatic on-the-ground condition determination as specified in subparagraph 2.2.16.2.7. The data supports extended squitter airborne/surface format transmission selection and Flight Status (FS), Vertical Status (VS), and Capability (CA) fields as provided in subparagraphs 2.2.16.2.6.2.5, 2.2.14.4.9, 2.2.14.4.32, and 2.2.14.4.5

(Ed note: Check sub para Nos)

(8) Airspeed Data

The airspeed data input is used to support airborne/on-the-ground determination in installations that support automatic on-the-ground condition determination as specified in subparagraph 2.2.16.2.7. The data supports extended squitter airborne/surface format transmission selection and Flight Status (FS), Vertical Status (VS), and Capability (CA) fields as provided in subparagraphs 2.2.16.2.6.2.5, 2.2.14.4.9, 2.2.14.4.32, and 2.2.14.4.5

(Ed note: Check sub para Nos)

© EUROCAE, 2003

NOTE: *If the flight number is used to identify the aircraft for ATC purposes it constitutes 'variable' data. When the interface providing the flight number is lost, the status of aircraft identification data remains unchanged (variable direct data). The content of register 20 will be zeroed following the loss of the interface.*

3.17.2 Indirect Data

a. Indirect data are those which pass through the transponder in either direction but which do not affect the surveillance protocol.

b. If the transponder is designed to function with data link devices outside the transponder equipment, the input and output interfaces shall satisfy the following specification:

(1) Interfaces for Indirect Data

Separate interfaces may be provided for standard Mode S transactions and ELM service, or a single interface may be used for both.

© EUROCAE, 2003

(2) Integrity of Interface Data Transfer

Data link interfaces shall be designed to ensure error rates of less than one detected error in 103 112-bit transmissions and less than one undetected error in 107 112-bit transmissions for both uplink and downlink transfers.

3.17.3 Standard Transaction Interfaces

a. Standard Mode S Transactions

The Mode S only All-Call shall not be transferred across this interface.

b. Transaction Interfaces

Separate interfaces may be provided for the uplink and the downlink, or a single interface, handling both directions, may be used.

c. Uplink Interface

(1) Information Content

The interface shall transfer the entire content of both short and long received uplink transmissions, with the possible exception of the last 24 bits (address/parity bits)~~.~~ except for interrogations UF=0, 11,16 and a UF=24 interrogation containing a request for a downlink ELM transfer (RC=3).This permits the receiving devices to properly identify the data field contents. The additional transfer of the address/parity bits will permit parity determination at an I/O device.

(2) No-Storage Design

If the interface design is based on the concept of shifting data out of the transponder as they are received, the interface shall be capable of transferring uplink content before the start of the corresponding reply.

(3) Storage Design, Acceptance Rate

If the interface design is based on the concept of shifting data out at a slower rate, the internal data system shall be able to process the content of Mode S interrogations (long or short) at a rate greater than or equal to:

- 50 long interrogations in any 1 second interval;

- 18 long interrogations in any 100 millisecond interval;

- 8 long interrogations in any 25 millisecond interval;

- 4 long interrogations in any 1.6 millisecond interval.

(4) Storage Design, Non-Acceptance

The transponder shall not accept a Comm-A interrogation (UF=20, 21) if the data content of that interrogation cannot be processed.

NOTE: *The Mode S reply is the sole means of acknowledging receipt of the content of an interrogation. Therefore, if the transponder is capable of replying to an interrogation, the airborne data system must be capable of accepting the data contained in that interrogation regardless of the timing between it and other accepted Mode S interrogations. Overlapping Mode S beams from several interrogators could lead to the need for considerable data handling and buffering. The minimum prescribed in (3) above, reduces data handling to a realistic level, and the nonacceptance provision provides for notification to the interrogator that data will temporarily not be accepted.*

(5) Broadcast Information

© EUROCAE, 2003

Regardless of design (No-Storage or Storage), the uplink interface shall have a means of indicating to the recipient that a received message was sent as a broadcast.

d. Downlink Interface

(1) Information Content

The interface shall be able to insert into the downlink transmission any bit not inserted by the transponder.

(2) No-Storage Design

If the interface is designed to insert bits into the transponder for immediate transmission, such bits shall occur at the interface at least one microsecond before actual transmission.

(3) Storage Design - Buffer Rate

If the interface shifts data into the transponder at a rate slower than the transmission rate, the internal data storage system shall be able to support the reply rate specified in paragraph 3.4.

(4) Storage Design - Buffer Function

The internal data storage system shall provide storage for all information bits required within standard down link messages.

Storage registers shall be provided for each of the 255 possible Comm-B messages associated with Ground-Initiated protocols. An addressable FIFO type storage facility shall be provided to maintain at least two Comm-B messages associated with Air-Initiated protocols.

The design of the storage system shall ensure, by double buffering or other means, that storage register content is not in a state of transition during the insertion of the content in a down link reply.

(5) Unavailable Data

If an interrogation requests, as in (3) above, data which are not available, the transponder shall insert "ZERO" into the affected fields of the reply.

NOTE: *The no-storage design specification can be met by ensuring that a non-connected data source or an open interface connexion results in zero-level inputs. The storage design specification can be met by ensuring the transmission of "ZERO" if the readout from a nonexistent register is requested.*

3.17.4 ELM Service Interfaces

a. ELM Transactions

ELM transactions involve the content of Mode S interrogation and reply formats UF=DF=24, Comm-C and Comm-D respectively. The reservation and closeout protocol uses the surveillance and Comm-A/B formats, UF=DF=4, 5, 20, 21.

b. ELM Interfaces

Separate interfaces may be provided for the uplink and the downlink, or a single interface, handling both directions, may be used.

c. Uplink Interface - Data Rate

(1) A transponder equipped for uplink ELM operation (Comm-C) shall be capable of processing at least 4 complete 16-segment ELMs in any 4-second period (level 3 and 4 transponders). A level 5 transponder shall be capable of processing at least 4 complete 16-segment ELMs in any 1 second period.

© EUROCAE, 2003

(2) The contents of any uplink ELM shall be available for transfer across the output interface no later than 1 second after it has been received.

© EUROCAE, 2003

d. Downlink Interface - Data Rate

A level 4 transponder shall be able to handle the data of at least one ELM with the maximum number of segments that the transponder is capable of delivering, in any 1-second period. A level 5 transponder shall be able to handle at least one 16-segment ELM in any 1 second period.

e. Uplink Interface - Interrogator Identity

In addition to data transferred as per c., above, the uplink interface shall transfer the interrogator site number (IIS) of the interrogator that has transmitted an ELM by multi-site protocol.

NOTE: *If the multi-site protocol is not used, an IIS code of zero shall be stored and reported.*

3.17.5 Downlink Message Cancellation

a. Downlink interfaces of storage design for both Comm-B and ELM shall, in addition to data transfer, accept a signal that cancels a message previously transferred into the transponder if it has not been closed out by ground command.

b. If more than one message is stored within the transponder for future transmission, the cancellation procedure shall be capable of cancelling the stored messages selectively.

3.18 DESCRIPTION OF THE MODE S SIGNAL FORMAT

Mode S signal formats and protocols are defined and described in detail in ICAO Annex 10, Volume IV.

NOTE: *Protocols relating to the use of formats and fields are described in paragraphs 3.19 through 3.21.*

3.18.1 Format Structure, Interrogation and Reply

Formats shall contain either 56 or 112 bits, the last 24 of which are used for address and parity while the rest are used for information transfer. A summary of interrogation and reply formats is presented in Figures 3-3 and 3-4.

3.18.2 Bit Numbering and Sequence

Bits are numbered in order of their transmission, beginning with bit 1. If numerical values are encoded by groups of bits (fields), then the first bit transmitted is the most significant bit (MSB) unless otherwise stated.

3.18.3 Fields

Information is coded in fields which consist of at least one bit. The decimal equivalent of the binary code formed by the bit sequence within a field is used as the designator of the field function.

3.18.3.1 Essential Fields

Each Mode S transmission contains two essential fields: one describing the format and the other a 24-bit field which carries parity information and contains either the address or the interrogator identity overlaid on parity as described in paragraph 3.20.2.1. The format descriptor (or number) is the field at the beginning of the transmission and the 24-bit field always occurs at the end of the transmission. The formats are described by the UF or DF descriptors.

© EUROCAE, 2003

3.18.3.2 Mission Fields

The remaining coding space is used to transmit the mission fields. For specific missions, a specific set of fields is prescribed. Mission fields have two-letter designators.

3.18.3.3 Subfields

Subfields may appear within mission fields. Subfields are labeled with three-letter designators.

3.18.4 Field Descriptions

Fields are described in alphabetical order in the following paragraphs and are indexed in Figure 3-5.

3.18.4.1 Address, Announced AA

This 24-bit (9-32) downlink field contains the aircraft address in the clear and is used in DF=11, the All-Call reply.

3.18.4.2 Altitude Code AC

This 13-bit (20-32) downlink field contains the altitude code (paragraph 3.17.1 b (1)) and is used in formats DF=0, 4, 16, and 20. ZERO is transmitted in each of the 13 bits if altitude information is not available. Metric altitude is contained in this field if the M-bit (26) is ONE. Otherwise the altitude is reported in feet (the format is dependant on the Q-bit (bit 28)).

3.18.4.3 Address/Parity AP

This 24-bit field (33-56 or 89-112) contains parity overlaid on the address according to paragraph 3.20.2.1 and appears at the end of all transmissions on both uplink and downlink with the exception of format DF=11.

3.18.4.4 Acquisition Special AQ

This 1-bit field (14) designates formats UF=0, 16 as acquisition transmissions and is repeated as received by the transponder in DF=0, 16 (see Note in paragraph 3.18.4.30).

3.18.4.5 Transponder Capability CA

This 3-bit (6-8) downlink field reports transponder capability and is used in DF=11, the All-Call reply. The codes are:

0	=	signifies no communications capability (surveillance only), no ability to set CA code 7, either on the ground or airborne
1	=	Reserved
2	=	Reserved
3	=	Reserved
4	=	signifies at least Comm-A and Comm-B capability, ability to set CA code 7, on the ground
5	=	signifies at least Comm-A and Comm-B capability, ability to set CA code 7, airborne
6	=	signifies at least Comm-A and Comm-B capability, ability to set CA code 7, either on the ground or airborne
7	=	signifies DR is ≠ to zero, or FS equals 2,3,4,5, either on the ground or airborne (see paragraphs 3.18.4.10, 3.18.4.12 and 3.18.4.37).

© EUROCAE, 2003

When the conditions for CA code 7 are not satisfied, installations that have communications capability but do not have automatic means to set on-the-ground conditions shall use CA code 6. Aircraft with automatic on-the-ground determination shall use CA codes 4 and 5. Data link capability reports (paragraph 3.21.1.12 d) shall be available for CA codes 4, 5, 6 and 7.

NOTE: *CA codes 1 to 3 were used by earlier Mode S transponders that did not use CA code 7.*

3.18.4.6 Crosslink Capability CC

This 1-bit (7) downlink field shall indicate the ability of the transponder to support the crosslink capability, i.e. decode the contents of the DS field in an interrogation with UF equals 0 and respond with the contents of the specified GICB register in the MV field of the corresponding reply with DF equals 16. This CC field is only used in format UF=0.

The codes are:

CC=0 aircraft cannot support the crosslink capability.
CC=1 aircraft supports the crosslink capability.

3.18.4.7 Code Label CL

This 3-bit (14-16) uplink field shall define the contents of the IC field and is used in UF = 11. Coding (in binary):

000	=	IC Field contains the II code
001	=	IC Field contains SI codes 1 to 15
010	=	IC Field contains SI codes 16 to 31
011	=	IC Field contains SI codes 32 to 47
100	=	IC Field contains SI codes 48 to 63

The other values of the CL field shall not be used.

NOTE: *The II code is defined in 3.18.4.15 and the SI code is defined in 3.18.4.34~~3.18.4.34~~.*

3.18.4.8 Downlink Format DF

The first field in all downlink formats is the transmission descriptor and is coded according to Figure 3-4, Note (3).

3.18.4.9 Designator Identification DI

This three-bit (14-16) uplink field identifies the coding contained in the SD field in formats UF=4, 5, 20 and 21. The codes are:

0	=	SD contains IIS (paragraph 3.21.2.1 a), bits 21-32 are not assigned.
1	=	SD contains multisite II lockout and multisite data link protocol information (paragraph 3.21.2.1 a).
2	=	SD contains extended squitter control information (paragraph 3.21.2.1 a).
3	=	SD contains SI multisite lockout, broadcast and GICB control information (paragraph 3.21.2.1 a)
4-6	=	SD not assigned.
7	=	SD contains extended data readout request, multisite and communications control information (paragraphs 3.21.2.1 a and 3.21.1.12 a).

© EUROCAE, 2003

3.18.4.10 Downlink Request DR

This 5-bit (9-13) downlink field in the reply formats DF = 4, 5, 20 and 21 is used to request the interrogator to extract the downlink messages from the transponder. The codes are:

0	=	No downlink request.
1	=	Request to send air-initiated Comm-B message (paragraph 3.21.1.12 b).
2	=	ACAS information available.
3	=	ACAS information available and request to send Comm-B message.
4	=	Comm-B broadcast #1 available.
5	=	Comm-B broadcast #2 available.
6	=	ACAS information and Comm-B broadcast #1 available.
7	=	ACAS information and Comm-B broadcast #2 available.
8-15	=	Not assigned.
16-31	=	See Comm-D/ELM protocol, (paragraph 3.21.4.1).

Codes 1-15 shall take precedence over codes 16-31 to permit the announcement of a Comm-B message to interrupt the announcement of a downlink ELM. This gives priority to the announcement of the shorter message. Announcement of the downlink ELM shall resume when the Comm-B is cleared.

3.18.4.11 Data Selector DS

This 8 bit (15-22) uplink field shall contain the BDS code of the GICB register whose contents shall be returned in the MV field of the corresponding reply with DF equals 16.This DS field is only used in format UF=0.

3.18.4.12 Flight Status FS

This 3-bit (6-8) downlink field reports the flight status of the aircraft and is used in formats DF=4, 5, 20 and 21. The codes are:

CODE	Alert	SPI	Airborne	On the Ground
0	no	no	yes	no
1	no	no	no	yes
2	yes	no	yes	no
3	yes	no	no	yes
4	yes	yes	Either	
5	no	yes	Either	
6 and 7 are not assigned				

3.18.4.13 Interrogator Code IC

This 4-bit (10-13) uplink field shall contain either the 4-bit II code (3.18.4.15) or the lower 4 bits of the 6-bit SI code (3.18.4.34~~3.18.4.34~~) depending on the value of the CL field (3.18.4.7).

3.18.4.14 Identification ID (4096 code)

This 13-bit (20-32) downlink field in DF=5, 21 contains the 4096 identification code reporting the numbers as set by the pilot (paragraph 3.5.6~~3.5.6~~ b.).

© EUROCAE, 2003

3.18.4.15 Interrogator Identification II

This 4-bit value shall define an interrogator identifier (II) code. These II codes shall be assigned to interrogators in the range of 0 to 15. An II code value of zero shall only be used in conjunction with acquisition based on lockout override.

NOTE: *The same information also may appear in the IIS subfields (paragraphs 3.21.2.1 a and 3.21.2.1 b).*

3.18.4.16 Control, ELM KE

This 1-bit (4) downlink field defines the content of the ND and MD fields in Comm-D replies, DF=24. For coding see paragraphs 3.21.3.1 e and 3.21.4.1 b.

3.18.4.17 Message, Comm-A MA

This 56-bit (33-88) uplink field contains messages directed to the aircraft and is part of Comm-A interrogations, UF=20, 21.

3.18.4.18 Message, Comm-B, MB

a. MB Message, Comm-B

This 56-bit (33-88) downlink field contains messages to be transmitted to the interrogator and is part of the Comm-B replies DF=20, 21. The contents of the MB field are determined by a Comm-B data selector code as described in paragraphs 3.21.1.12 a. For certain specific MB messages (Data Link Capability Report, paragraph 3.21.1.12 e, Aircraft Identification Report, paragraph 3.21.1.13 and Resolution Advisories report, paragraph 3.23.1.2 a) the MB field contains the 8-bit Comm-B data source designator code.

b. For messages that use the data source designator code (BDS) to define the content of the MB message field of which it is part, the BDS code shall comprise two group of 4 bits each, BDS1 (33-36) and BDS2 (37-40) which correspond to the BDS1 and BDS2 data source designator codes as described in paragraph 3.21.1.12 a.

3.18.4.19 Message, Comm-C MC

This 80-bit (9-88) uplink field shall contain:

a) one of the segments of a sequence used to transmit an uplink ELM to the transponder containing the 4-bit (9-12) IIS subfield; or

b) control codes for a downlink ELM, the 16-bit (9-24) SRS subfield (3.21.4.1) and the 4-bit (25-28) IIS subfield.

MC is part of UF=24.

3.18.4.20 Message, Comm-D MD

This 80-bit (9-88) downlink field shall contain:

a) one of the segments of a sequence used to transmit a downlink ELM to the interrogator; or

b) control codes for an uplink ELM.

MD is part of DF=24.

3.18.4.21 Message, Extended Squitter ME

This 56-bit (33-88) downlink field is used to broadcast messages. It is used in format DF=17.

© EUROCAE, 2003

3.18.4.22 Message, Comm-U MU

This 56-bit (33-88) uplink field contains information used in air-to-air exchanges and is part of the long air-air surveillance interrogation UF=16.

3.18.4.23 Message, Comm-V MV

This 56-bit (33-88) downlink field contains information used in air-to-air exchanges and is part of the long air-air surveillance reply DF=16. This downlink field shall contain GICB information as requested in the DS field of the UF=0 interrogation that elicited the reply.

3.18.4.24 Number of C-Segment NC

This 4-bit (5-8) uplink field gives the number of a segment transmitted in an uplink ELM and is part of a Comm-C interrogation, UF=24. The protocol is described in paragraph 3.21.3.1.

3.18.4.25 Number of D-Segment ND

This 4-bit, (5-8) downlink field gives the number of a segment transmitted in a downlink ELM and is part of a Comm-D reply, DF=24. The protocol is described in paragraph 3.21.4.1.

3.18.4.26 Protocol PC

This 3-bit (6-8) uplink field contains operating commands to the transponder and is part of surveillance and Comm-A interrogations UF=4, 5, 20, 21. The PC field shall be ignored for the processing of surveillance or Comm-A interrogations containing DI=3 (3.21.2.1). The codes are:

0 = No changes in transponder state.
1 = Non-selective All-Call lockout.
2 = Not assigned.
3 = Not assigned.
4 = Close out Comm-B (3.21.1.12).
5 = Close out Comm-C (3.21.3.1 g).
6 = Close out Comm-D (3.21.4.1 d).
7 = Not assigned.

3.18.4.27 Parity/Interrogator Identity PI

This 24-bit (33-56 or 89-112) downlink field contains the parity overlaid on the interrogator's identity code according to paragraph 3.20.2.1. PI is part of the Mode S All Call Reply and acquisition squitter (DF=11), and the Mode S extended squitter (DF=17).

3.18.4.28 Probability of Reply PR

This 4-bit (6-9) uplink field contains commands to the transponder which specify the reply probability to the Mode S-Only All-Call interrogation UF=11 that contains the PR. A command to disregard any lockout state can also be given. The assigned codes are as follows:

© EUROCAE, 2003

0	=	Reply with probability = 1.
1	=	Reply with probability = 1/2.
2	=	Reply with probability = 1/4.
3	=	Reply with probability = 1/8.
4	=	Reply with probability = 1/16.
5, 6, 7	=	Not assigned.
8	=	Disregard lockout, reply with probability = 1.
9	=	Disregard lockout, reply with probability = 1/2.
10	=	Disregard lockout, reply with probability = 1/4.
11	=	Disregard lockout, reply with probability = 1/8.
12	=	Disregard lockout, reply with probability = 1/16.
13,14,15	=	Not assigned.

NOTE: *On receipt of a Mode S-Only All-Call containing a PR code other than 0, 5, 6, 7, 8, 13, 14 or 15, the transponder executes a random process and makes a reply decision for this interrogation in accordance with the commanded probability. Random occurrence of replies enables the interrogator to acquire closely spaced aircraft whose replies would otherwise synchronously garble each other.*

3.18.4.29 Reply Control RC

This 2-bit (3-4) uplink field designates the transmitted segment as initial, intermediate or final if coded 0, 1, 2 respectively. RC=3 is used to request for downlink ELM delivery by the transponder. RC is part of the Comm-C interrogation, UF=24. The protocols are described in paragraphs 3.21.3.1 and 3.21.4.1 b.

3.18.4.30 Reply Information, Air-To-Air RI

This 4-bit (14-17) downlink field appears in the special surveillance replies DF=0, 16 and reports maximum cruising true airspeed capability and type of reply to the interrogating aircraft. The coding is as follows:

0	=	signifies a reply to an air-air interrogation UF = 0 with AQ =0
1-7	=	Reserved for ACAS.
8-15	=	Acquisition reply

8	=	No maximum cruising true airspeed data available.
9	=	Maximum Cruising True Airspeed is less than or equal to 75 knots.
10	=	Maximum Cruising Airspeed is greater than 75 and less than or equal to 150 knots.
11	=	Maximum Cruising Airspeed is greater than 150 and less than or equal to 300 knots.
12	=	Maximum Cruising Airspeed is greater than 300 and less than or equal to 600 knots.
13	=	Maximum Cruising Airspeed is greater than 600 and less than or equal to 1200 knots.
14	=	Maximum Cruising Airspeed is greater than 1200 knots.
15	=	Not assigned.

NOTE: *Bit 14 of this field replicates the AQ bit (paragraph 3.18.4.4) of the interrogation resulting in the coding scheme above.*

© EUROCAE, 2003

3.18.4.31 Reply Length RL

This 1-bit (9) uplink field in UF=0, 16 commands a reply in DF=0 if ZERO, and a reply in DF=16 if ONE and the transponder is associated with airborne collision equipment.

3.18.4.32 Reply Request RR

This 5-bit (9-13) uplink field contains length and content of the reply requested by the interrogators. RR is part of the surveillance and Comm-A interrogations UF=4, 5, 20, 21. The codes are outlined below:

RR Code	Reply Length	MB Content
0-15	Short	Not applicable
16	Long	Air-Initiated Comm-B (3.21.1.12 b)
17	Long	"Data Link Capability Report" (3.21.1.12 e)
18	Long	Flight ID (3.21.1.13)
19	Long	ACAS Resolution Advisory Report (3.23.3.4)
20-31	Long	Not assigned

NOTE 1: *If the first bit of the RR code is ONE, the last four bits of the 5-bit RR code, if transformed into their decimal equivalent, designate the number (BDS1) of the requested source. BDS2 is assumed to be ZERO if not specified by DI=7 and RRS. See paragraph 3.21.2.1 a(4).*

NOTE 2: *Codes 20-31 are reserved for applications such as data link communications, ACAS, etc.*

3.18.4.33 SD Special Designator, IIS and SIS, Subfields in SD

a. SD Special Designator

This 16-bit (17-32) uplink field can contain control codes affecting transponder protocol and is part of surveillance and Comm-A interrogations UF=4, 5, 20, 21. The content of this field is specified by the DI field.

b. IIS, Subfield in SD

This 4-bit subfield (17-20) appears in all SD fields of uplink formats 4, 5, 20 and 21 if the DI code is 0, 1 or 7. IIS is the Interrogator Identifier.

c. SIS, Subfield in SD

This 6-bit subfield (17-22) appears in all SD fields of uplink formats 4, 5, 20 and 21 if the DI code is 3. SIS is the Surveillance Identifier.

3.18.4.34 Surveillance Identifier SI

This 6-bit value shall define a surveillance identifier (SI) code. These SI code values shall be assigned to interrogators in the range of 1 to 63. An SI value of zero shall not be used. The SI codes shall be used with the multisite lockout protocols (3.20.2.5). The SI codes shall not be used with the multisite communications protocols.

NOTE: *The same information also may appear in the SIS subfields (paragraph 3.21.2.1 a).*

3.18.4.35 ACAS Sensitivity Level Report SL

This 3-bit (9-11) field appears in special surveillance reply formats DF=0 and 16. This field reports the sensitivity level at which the ACAS unit is currently operating.

© EUROCAE, 2003

The codes are:

0	=	ACAS inoperative
1	=	ACAS is operating at sensitivity level 1
2	=	ACAS is operating at sensitivity level 2
3	=	ACAS is operating at sensitivity level 3
4	=	ACAS is operating at sensitivity level 4
5	=	ACAS is operating at sensitivity level 5
6	=	ACAS is operating at sensitivity level 6
7	=	ACAS is operating at sensitivity level 7

3.18.4.36 Uplink Format UF

The first field in all uplink formats is the transmission descriptor in all interrogations and is coded according to Figure 3-3, Note (3).

3.18.4.37 Utility Message in DF=4, 5, 20, 2 UM

This 6-bit (14-19) downlink field in DF=4, 5, 20, 21 contains transponder status readouts.

3.18.4.38 Vertical Status VS

This 1-bit (6) downlink field in DF=0, 16 indicates, when ZERO, that the aircraft is airborne and, when ONE, that the aircraft is on the ground.

3.18.4.39 Unassigned Coding Space

Unassigned coding space as indicated in Figures 3-3 and 3-4 contains all ZEROs as transmitted by interrogators and transponders. Unassigned coding space within existing fields is reserved for possible future use.

3.18.4.40 Future Coding

Because unassigned coding space is transmitted as ZEROs, future coding must be defined so that all ZEROs indicate that no action is to be taken, i.e. no command given, no state changes are caused in the transponder or ground station.

3.19 MODE S TRANSPONDERS

All Mode-S transponders support ground-to-air and air-to-air surveillance.

Paragraph 1.4.2 of this document indicates capabilities that become available through the use of Mode S and its data link. The paragraphs which follow provide a more detailed description of these various capabilities as they relate to the specific features which must exist within Mode S avionics. Each capability requires that the unit properly handle the associated formats, message fields, protocols and interfaces as specified in the referenced paragraphs.

3.20 THE LEVEL 1 TRANSPONDER

The Level 1 Mode-S Transponder supports the ground-based surveillance functions of both Mode A/C and Mode S and also air-to-air surveillance. It shall generate replies to valid Mode A/C Mode A and C interrogations. The Mode S formats to be processed and protocol requirements for this transponder are defined in the following paragraphs.

© EUROCAE, 2003

Draft change proposal 58 after WG 49 meeting 4

3.20.1 Mode S Formats

The transponder processes the 56-bit interrogations and 56-bit reply formats, listed in Figures 3-6 and 3-7. (See paragraph 3.18.4 for definition and coding of the applicable fields).

3.20.2 Mode S Protocols

3.20.2.1 Error Protection (Figures 3-8 and 3-9)

Parity check coding is used in Mode S interrogations and replies to provide protection against errors. This code is defined in paragraphs a, b and c below.

On receipt of a Mode S interrogation, the transponder shall perform a parity check, which is an examination of the sequence of demodulated bits to determine whether it is consistent with the code structure. If the bit sequence is consistent, the parity check is passed; otherwise it is failed. In this event the interrogation shall not be accepted.

Similarly, the Mode S transponder shall encode prior to transmitting a reply or squitter so that these transmissions are consistent with the code structure.

a. Parity Check Sequence - A sequence of 24 parity check bits, generated by a code described in b, is incorporated into the field formed by the last 24 bits of all Mode S transmissions. The 24 parity check bits are combined with either the address or the interrogator identification as described in c. The resulting combination then forms either the AP (Address/Parity) or the PI (Parity/Identification) field.

b. Parity Check Sequence Generation - The sequence of 24 parity bits (P_1, P_2 ..... P_{24}) shall be generated from the sequence of information bits (m_1, m_2 .... m_k) where k is 32 or 88 for short or long transmissions respectively. This shall be done by means of a code generated by the polynomial :

$$G(x) = 1 + x3 + x10 + x12 + x13 + x14 + x15 + x16 + x17 + x18 + x19 + x20 + x21 + x22 + x23 + x24$$

When by the application of binary polynomial algebra, x^{24} [M(x)] is divided by G(x) where the information sequence M(x) is :

$$m_k + m_{k-1}x + m_{k-2}x^2 + ... + m_1x^{k-1}$$

The result is a quotient and a remainder R(x) of degree less than 24. The bit sequence formed by this remainder represents the parity check sequence. Parity bit p_i, for any i from 1 to 24, is the coefficient of x^{24-i} in R(x).

NOTE: *The effect of multiplying M(x) by x^{24} is to append 24 ZERO bits to the end of the sequence.*

c. AP or PI Field Generation - The address used for AP field generation is either the aircraft address (3.20.2.2~~3.20.2.2~~ a), the broadcast address (3.20.2.2~~3.20.2.2~~ e) or the All-Call address (3.20.2.2~~3.20.2.2~~ b). The address shall be a sequence of 24 bits (a_1, a_2 . . . a_{24}). In the aircraft address, a_1 shall be the bit transmitted first in the AA field of an All-Call reply. This address sequence shall be used in the downlink Address/Parity field generation, while a modified form of this sequence (b_1, b_2 . . . b_{24}) shall be used for uplink Address/Parity field generation.

The code used in downlink PI field generation shall be formed by a sequence of 24 bits (a_1, a_2, . . . a_{24}) where the first 17 bits are ZEROs, the next three bits are a replica of the code label (CL) field (3.18.4.7) and the last four bits are a replica of the interrogator code (IC) field (3.18.4.13)

If the reply is made in response to a Mode A/C/S all-call, a Mode S-only all-call with CL field and IC field equal to zero, or is an acquisition or extended squitter, the II (3.18.4.15) and the SI (3.18.4.34~~3.18.4.34~~) codes shall be set to zero.

© EUROCAE, 2003

Bit b_i is the coefficient of x^{48-i} in the polynomial G(x)A(x), where:

$A(x) = a_1x^{23} + a_2x^{22} + \ldots + a_{24}$

and G(x) is defined in 3.20.2.1 b.

The sequence of bits transmitted in the AP or PI field is:

$t_{k+1}, t_{k+2} \ldots t_{k+24}$

The bits are numbered in order of transmission, starting with k+1.

In interrogations $t_{k+i} = b_i + P_i$ where "+" prescribes modulo-2 addition, i = 1 is the first bit transmitted in the AP field.

In replies and receivers squitter transmissions, $t_{k+i} = a_i + P_i$ where "+" prescribes modulo-2 addition; i = 1 is the first bit transmitted in AP or PI field.

NOTE: *Figures 3-8 and 3-9 show typical implementation of the error protection circuits and a sample of bit patterns.*

3.20.2.2 Interrogation Acceptance Protocol (Figure 3-10)

Mode S interrogations shall be accepted only if the address of the recipient is as defined in a or b or l below (Annex 10 paragraph 3.1.2.4.1.2.3):

a. Aircraft Address - The interrogation shall be accepted if the address extracted from the received interrogation is identical to the transponder's address and UF is ≠ 11.

b. All-Call Address - If the address extracted from the received interrogation consists of 24 ONEs and UF=11, the transmission is a Mode S-Only All-Call and the received interrogation shall be accepted according to i below unless the lockout protocol is in effect or the "on the ground" report (VS or FS field) indicates the ground condition.

c. Mode A/C/Mode S All-Call - A Mode A/C/Mode S All-Call interrogation (1.6 microseconds P4) shall be accepted unless the T_D timer is running or side lobe suppression is in effect or the "on the ground" report (VS or FS field) indicates the ground condition.

d. Mode A/C-Only All-Call - A Mode S transponder shall not accept the Mode A/C-Only All-Call (0.8 μs P4).

e. Lack of Reply Capability - The transponder shall not accept Mode S interrogations UF=4 or UF=5 if the code in the RR field is larger than 15.

f. Side Lobe Suppression - Suppression as described in paragraph 3.8.2 shall apply to responses to Mode A/C and Mode A/C/Mode S All-Call interrogations.

g. All-Call Lockout Conditions - On receipt of a Mode S-Only All-Call (UF=11) containing II corresponding to the designator of a running T_L timer, the interrogation shall not be accepted unless the contained PR code is 8 through 12 and the "on the ground" report (VS or FS field) does not indicate the ground condition. Upon receipt of a Mode S-Only All-Call (UF=11) containing II=0, the interrogation shall be accepted if the T_D timer is not running or if the received PR code is 8 through 12 and the "on the ground" report (VS or FS field) does not indicate the ground condition.

h. Formats for Which Transponder Is Not Equiped - The transponder shall not accept a Mode S format for which it is not equipped.

i. Stochastic All-Calls - Upon receipt of a Mode S-Only All-Call with a PR (paragraph 3.18.4.28) code other than 0 or 8, the transponder shall execute a random process. If the reply probability indicated by the outcome of the random process is less than or equal to the reply probability indicated by the value of PR and if no lockout condition applies (includes override, paragraph 3.20.2.4) and the "on the ground" report (VS or FS field) does not indicate the ground condition the transponder shall accept the interrogation.

© EUROCAE, 2003

If the value of PR is 5 through 7 or 13 through 15, the interrogation shall not be accepted.

j. Mode S Reply Rate Limiting - Mode S interrogations shall not be accepted if the optional Mode S reply rate limit is exceeded.

k. Transaction Cycle - If the transponder is in a transaction cycle, it shall not accept interrogations.

The transaction cycle begins when the transponder has recognized an interrogation type and ends when the transponder has finished the reply or has aborted processing this interrogation.

NOTE: *A Mode S interrogation is recognized when the sync phase reversal has been detected. The transaction cycle ends when either the interrogation has been accepted and has been replied to, or when the interrogation has not been accepted because of wrong address, lockout, etc.*

A Mode A/C interrogation is recognized when a proper P1-P3 interval has been detected and a following leading edge of a P4 has not been detected.

During Mode A/C suppression intervals recognition of P1 - P2 - P3 intervals is suspended.

In the interval between P1 and an expected P3, a transponder is not in a transaction cycle.

l. Broadcast address - If the address extracted from the received interrogation consists of 24 ONES and UF = 20 or 21, then the received interrogation shall be accepted as a broadcast interrogation.

3.20.2.3 Interrogation Reply Coordination

The transponder shall generate replies as follows:

Interrogations	Replies
Mode A	4096 Codes
Mode C	Altitude Codes
Mode A/S All-Call	Reply is DF=11
Mode C/S All-Call	Reply is DF=11

For all Mode S interrogations the reply format number (DF) shall be the same as the interrogation format number (UF).

3.20.2.4 Lockout Protocol (Figure 3-11)

Transponders can be prevented from accepting certain interrogations by command from an interrogator.

Non-Selective All-Call Lockout - On acceptance of an interrogation containing code 1 in the PC field or containing LOS=1 together with IIS=0 in the SD field or both of these code sets, the transponder shall start the T_D timer. This timer shall run for 18 ±1.0 seconds after the last received command.

3.20.2.5 Multisite Lockout Protocol (Figure 3-11)

To prevent transponder acquisition from being denied to one interrogator by lockout commands originating from another interrogator, the following multisite lockout protocol shall be used.

© EUROCAE, 2003

a. Multisite All-Call Lockout Protocol

Upon receipt of an interrogation with DI=1 or with DI=7, the transponder shall examine the LOS subfield (bit 26) and if it is ONE, it shall examine the contents of the IIS subfield (bits 17-20) (paragraph 3.21.2.1 a). If an interrogation identifier other than "0" is present in IIS, the transponder has received a multisite lockout command for the interrogator indicated in IIS.

Upon receipt of an interrogation with DI=3, the transponder shall examine the LSS subfield (bit 23) and if it is ONE, it shall examine the contents of the SIS subfield (bits 17-22) (paragraph 3.21.2.1 a). If a surveillance identifier other than "0" is present in SIS, the transponder has received a multisite lockout command for the interrogator indicated in SIS.

b. Multisite All-Call Lockout Function

Upon receipt of a multisite lockout command, the transponder shall start the T_L timer assigned to the IIS or SIS code (See Figures 3.10 and 3.11). The timer shall run for 18 ± 1.0 seconds after the last acceptance of an interrogation containing the command.

NOTE 1: *Fifteen interrogators can send independent multisite II lockout commands. In addition, sixty three interrogators can send independent SI lockout commands. Each of these lockout commands must be timed separately*

NOTE 2: *Multisite lockout (which uses only non-zero II codes) does not affect the response of the transponder to a Mode S-only all-call interrogation containing II equals 0, or PR equals 8 to 12 or to Mode A/C/S all-call interrogations.*

3.20.2.6 Acquisition Squitter Protocol

Mode S transponders shall transmit squitters (unsolicited transmissions) to facilitate acquisition of the aircraft. The short (56-bit) acquisition squitter has the format of an All-Call reply. This squitter is used by aircraft equipped with airborne collision avoidance systems to detect the presence and 24-bit address of Mode S equipped aircraft.

Mode S transponders shall transmit Acquisition squitters to facilitate acquisition. It shall not be possible to inhibit acquisition squitters except as specified in this section (3.20.2.6) and in section (3.21.2.6).

a. Acquisition Squitter Format - The format used for the acquisition squitter transmissions shall be the All-Call reply, DF=11 using II=0 in generating the PI field.

b. Squitter Rate - Acquisition squitter transmissions shall be emitted at random intervals that are uniformly distributed over the range from 0.8 to 1.2 seconds using a time quantisation of no greater than 15 milliseconds relative to the previous acquisition squitter, with the following exceptions:

(1) The scheduled acquisition squitter shall be delayed if a mutual suppression interface is active.

NOTE: *A mutual suppression system may be used to connect on-board equipment operating in the same frequency band in order to prevent mutual interference. Acquisition squitter action resumes as soon as practical after a mutual suppression interval.*

(2) The scheduled acquisition squitter shall be delayed if the transponder is in a transaction cycle (paragraph 3.20.2.2~~3.20.2.2~~ k.).

An acquisition squitter shall not be interrupted after the squitter transmission has begun. A delayed acquisition squitter shall be transmitted as soon as the transponder becomes available.

© EUROCAE, 2003

3.20.2.7 Flight Status and Vertical Status Protocols (Figure 3-12)

Mode S-equipped aircraft shall report details of their flight status. The source of and the rules for such reports are as follows:

a. Alert - The transponder shall transmit the 4096 identification code in Mode A replies and in the ID field of downlink format DF=5. This code can be changed by the pilot, and when a change is made an alert condition shall be established. If the identification code is changed to 7500, 7600 or 7700, the alert condition shall be permanent. If the identification code is changed to any other value, the alert condition shall be temporary and self-cancelling after 18 ±1.0 seconds (T_C timer). The alert condition shall be reported in the FS field. The permanent alert condition shall be terminated and replaced by a temporary alert condition when the identification code is set to a value other than 7500, 7600 or 7700.

b. ~~On-the-Ground Report - The transponder shall have a means of reporting that the aircraft is on the ground. This information shall be coded in the FS and VS fields. If a means for indicating the on-the-ground condition is not available at the transponder, the FS and VS codes shall indicate that the aircraft is airborne.~~ On-the-Ground Report – The on-the-ground status of the aircraft **shall** be reported in the FS field and the VS field and the CA field. If a means for automatically indicating the on-the-ground condition (*e.g.,* a weight on wheels or strut switch) is available at the transponder data interface, it **shall** be used as the basis for the reporting of status (FS, VS, for CA codes 4 or 5 for airborne or on-the ground). If a means for automatically indicating the on-the-ground condition is not available at the transponder data interface, the FS and VS codes **shall** indicate that the aircraft is airborne and the CA field **shall** indicate that the aircraft is either airborne or on the ground (CA=6).

c. Special Position Identification - When manually selected, the transponder shall transmit the equivalent of the SPI in the FS field of surveillance replies DF=4,5. This code shall be transmitted for 18 ±1.0 seconds (T_I timer) after initiation and can be reinitiated at any time.

3.20.2.8 Capability Reporting

The transponder shall transmit a "0" value in the three-bit CA (capability) field of an All-Call (DF=11) reply.

3.20.2.9 All-Call Reply Protocol

Upon acceptance of a Mode S-Only All-Call interrogation (UF=11) the transponder shall reply by overlaying the contents of the received CL and IC fields on parity according to paragraph 3.20.2.1, resulting in the PI field which shall be used in the All-Call reply (DF=11). Upon acceptance of a Mode A/C/Mode S All-Call interrogations the transponder shall generate the PI field using II=0 or SI=0.

3.20.2.10 Reply Content (Figure 3-13)

The information content of a Mode S reply shall reflect the conditions existing in the transponder after completion of all transponder processing of the interrogation soliciting that reply.

In the reply to UF=0, the transponder shall insert:

VS in bit 6.

RI in bits 14 to 17.

AC in bits 20 to 32.

© EUROCAE, 2003

Draft change proposal 63 after WG 49 meeting 4

In the reply to UF=4, AC shall be in bits 20 to 32. In the reply to UF=5, ID shall be in bits 20 to 32. In the reply to UF=11, AA shall be in bits 9 to 32.

In replies to UF=4 and UF=5, the transponder shall insert ZEROs in bits 9 through 13 in the DR field.

© EUROCAE, 2003

3.20.2.11 Data Handling and Interfaces

The transponder shall have the following data interfaces as described in paragraph 3.17:

Aircraft Address (AA).
Maximum Cruising True Airspeed (RI).
Pressure Altitude (AC).
4096 Identification Code (ID).
On-the-Ground Report (FS, VS).
Special Position Indicator (FS).

3.21 DATA LINK TRANSPONDER DESCRIPTION (LEVEL 2 AND HIGHER)

The following paragraphs a through ~~g~~ h provide a general description of data link transponders.

a. Formats

Messages appear in dedicated fields (MA, MB, MC, MD, etc.) of some Mode S formats.

b. Participants

Uplink messages are generally directed to the pilot's attention. Downlink messages can be readouts of on-board data which do not need pilot intervention or can be messages deliberately sent by the pilot. ("Pilot" is to be understood as any of the flight deck crew.)

c. Peripherals

Peripherals, also called I/O devices, process and store messages received and/or to be transmitted. They translate received messages into visual or aural form, and messages to be transmitted, into agreed-upon binary coding. Peripherals can be contained within the transponder enclosure or can be separated from the transponder.

d. Interfaces

If peripheral separation as mentioned above is used, interfaces (paragraph 3.17) shall be part of the transponder design.

e. Message Content, Specified

This document specifies message content only for standardized messages which have their data base within the transponder. These are the extended capability report using Comm-B and the transmission acknowledgment subfields of the Comm-D protocol (paragraphs 3.21.1.12 d and 3.21.3.1 e.)

f. Message Content, Not Specified

Message structure and coding for various data link applications will be found in the documents describing those services.

g. Protocol Overview

Data exchanges are always under control of the interrogator. Comm-A messages are sent directly to the transponder. Ground-initiated Comm-B replies are extracted from the transponder by suitable interrogation content. Air-initiated Comm-B messages are announced by the transponder and are transmitted in a subsequent reply only after authorization by the interrogator. Longer messages, either on the uplink or downlink, can be exchanged by the ELM protocol using Comm-C and Comm-D formats.

© EUROCAE, 2003

The ELM protocol provides for the interrogator transmission of up to sixteen 112-bit message segments before requiring a reply from the transponder. It also allows a corresponding procedure for downlink ELM transmission.

Air-initiated Comm-B messages are announced to all interrogators and can be extracted by any interrogator. However, an individual interrogator can use the multisite protocol to reserve for itself the ability to close out the Comm-B transaction. A transponder can be instructed to identify the interrogator that is designated to process an air initiated Comm-B, or air initiated downlink ELM transaction .That interrogator is considered to be the reserved interrogator for the transaction and the transaction cannot be closed out by an interrogator using any other II code.

h. . Address Announced (AA) validity

If the transponder 24-bit Address Announced (AA) is set to ONEs or ZEROs at startup or during operation then this error condition must be indicated to the pilot and the transponder shall either transition to Standby State or Power Off Condition.

Note: Paragraph h is requirement is imposed to specifically disallow transponders from operating with invalid addresses. This condition has been observed in airspace operations and it poses a number of unsafe conditions.

3.21.1 The Data Link (Level 2) Transponder

This transponder shall, in addition to the level 1 transponder:

a. Process uplink and downlink formats UF=DF=20 and 21

(Figure 3-14). The formats UF=DF=16 are optional.

b. Receive broadcast transmissions from ground interrogators (paragraph 3.21.1.11).

c. Follow the protocols for:

Comm-A (paragraph 3.21.1.10).
Comm-B (paragraph 3.21.1.12).
Comm-U/V (air-air) (paragraph 3.21.1.16~~3.21.1.16~~) (optional).
Multisite message operation (paragraph 3.21.2).

3.21.1.1 Interrogation Acceptance Protocol

(Figure 3-15)

The interrogation acceptance protocol of paragraph 3.20.2.2~~3.20.2.2~~ shall be used with the following additions:

a. An interrogation shall not be accepted if the interface data buffer (paragraph 3.17.3 c (4)) is full.

b. An interrogation shall be accepted as a "broadcast" if the UF format code is 20 or 21 or 16 (if so equipped) and if an all ONEs address is decoded.

c. Only formats for which the transponder is designed and to which it can reply if a reply is required shall be accepted.

d. On receipt of a Mode S-Only All-Call (UF=11) containing SI or II corresponding to the designator of a running TL timer, the interrogation shall not be accepted unless the contained PR code is 8 through 12.

© EUROCAE, 2003

3.21.1.2 Error Protection

The parity algorithm shall be as described in paragraph 3.20.2.1.

3.21.1.3 Information Transfer

The transponder shall be able to transfer information to and from the appropriate data sinks (destinations) and sources (paragraphs 3.17 and 3.21 c and d).

© EUROCAE, 2003

3.21.1.4 Interrogation-Reply Coordination (Figure 3-16)

The transponder shall generate replies to accepted interrogations as follows:

Interrogation	Reply
Mode A/C Mode A	4096 Code
Mode A/C Mode C	Altitude Code
Mode A/C/Mode S All-Calls	DF=11
UF=4 and UF=5	as below
UF=11	DF=11
UF=20 and UF=21	as below
Broadcast	None

Upon acceptance of an interrogation with UF codes 0 or 16, the transponder shall reply with DF=0 if RL=0 and shall reply with DF=16 if RL=1.

If the transponder is not equipped with the optional long air-air formats UF=DF=16, it shall not accept UF=16 and it shall not reply to UF=0 containing RL=1.

If the transponder is equipped with the optional long air formats UF=DF=16, reply rate limiting (3.11) shall not prevent the transmission of DF=16.

Upon acceptance of an interrogation with a UF code of 4, 5, 20 or 21, the transponder shall examine the RR code and generate downlink formats as follows:

Uplink Format, UF	RR Code	Downlink Format, DF
4	0 through 15	4
5	0 through 15	5
20	0 through 15	4
21	0 through 15	5
4	16 through 31	20
5	16 through 31	21
20	16 through 31	20
21	16 through 31	21
NOTE: *In effect, the first bit of the RR field determines the lengh of the required reply*		

3.21.1.5 Lockout Protocols (Figure 3-11)

Lockout commands shall not be accepted if they occur within a broadcast interrogation.

In addition to the rules in paragraph 3.20.2.4, lockout commands shall be accepted if they appear in interrogations UF=20 and UF=21.

3.21.1.6 Flight and Vertical Status Protocols

(Figure 3-12)

The FS report (paragraph 3.20.2.7) shall also appear in DF=20 and DF=21 and VS shall also appear in DF=16.

© EUROCAE, 2003

When manually selected, the transponder shall indicate the equivalent of the SPI condition in the FS field of surveillance replies DF=4,5 and in the Surveillance Status Subfield of extended squitter transmissions (DF=17) when they contain the airborne position report. This code shall be transmitted for 18 ±1.0 seconds (T_I timer) after initiation and can be reinitiated at any time.

3.21.1.7 Capability Report

The transponder shall reply with a non-zero value of CA (paragraph 3.18.4.5) in the capability field of DF=11, indicating that further data link information is available in a data link capability report (paragraph 3.21.1.12 d).

3.21.1.8 Reply Content

(Figure 3-13)

The reply content summary of paragraph 3.20.2.10 shall apply. Additionally, the rules applying to formats UF=4, UF=5 shall also apply to formats UF=20 and UF=21 respectively.

3.21.1.9 UM Protocol (Figure 3-17)

The UM field shall support functions for the multisite protocol. The following paragraphs contain the requirements and descriptions of the protocol.

a. Field description is in paragraph 3.18.4.37.

b. If DI=1, multisite information may be requested as specified in paragraph 3.21.2.1 b

c. If no request appears, directed Comm-B/D information may appear in UM as specified in paragraphs 3.21.2.3 b and 3.21.2.5 b.

3.21.1.10 Comm-A Protocol

Comm-A is the transmission of information from the ground to the aircraft by formats UF=20, 21. In addition to the content of the corresponding short formats (UF=4, 5) the Comm-A formats contain the additional 56-bit field MA.

The transponder shall direct the content of received Comm-A formats to the interface (paragraph 3.17.2).

3.21.1.11 Broadcast Protocol

If a broadcast interrogation has been accepted (paragraph 3.21.1.1), the transponder shall make that information available at the appropriate interface. Other transponder functions shall not be affected, and a reply shall not be transmitted.

3.21.1.12 Comm-B Protocol (Figure 3-18)

Comm-B is the transmission of information from the aircraft to the ground and follows the general protocol as outlined in paragraph 3.21 g. Figure 3-18 is a flow chart containing the ground-initiated Comm-B readout, the procedures for air-initiated Comm-B transactions and the multisite procedures.

a. Comm-B data selector, BDS

The 8-bit BDS code shall determine the register whose contents shall be transferred in the MB field of the Comm-B reply. It shall be expressed in two groups of 4 bits each, BDS1 (most significant 4 bits) and BDS2 (least significant 4 bits).

© EUROCAE, 2003

(1) BDS1 Code

The BDS1 Code shall be as defined in the RR field of a surveillance or Comm-A interrogation.

(2) BDS2 Code

The BDS2 code shall be as defined in the RRS subfield of the SD field (3.1.2.6.1.4.1) when DI = 7. If no BDS2 code is specified (i.e. DI is not equal to 7) it shall signify that BDS2 = 0.

b. Ground-Initiated Comm-B

To extract data from the aircraft using the ground initiated Comm-B protocol, the interrogator shall insert the Comm-B data selector codes according to paragraph 3.21.1.12 a.

c. Air-Initiated Comm-B

An air-initiated Comm-B sequence shall start upon the receipt of a message intended for delivery to a ground interrogator. After receipt of this message, the transponder shall insert codes 1 or 3 as appropriate, in the DR field of a surveillance or Comm-B reply, DF=4, 5, 20, 21. On receipt of this announcement, the interrogator transmits an interrogation with UF = 4, 5, 20 or 21 with RR = 16 and DI $\neq$ 7 or with RR = 16 and DI = 7 and RRS=0 in a subsequent interrogation. Receipt of this code by the transponder shall constitute the authorization to transmit the data. The resulting MB field contains a code identifying the content of the field. This reply, and others following it, shall continue to contain codes 1 or 3 as appropriate in the DR field. After the message has been transmitted at least once in response to an interrogation using non-multisite protocols (paragraph 3.21.2.3 d) and after closeout is received (e.g. Code 4 in the PC field) in UF=4, 5, 20, 21, the transaction shall be closed out and the DR code belonging to this message immediately removed. Another message waiting to be transmitted will then set the DR code to 1 or 3 as appropriate so that the reply will contain the announcement of this next message. If RR=16 with DI $\neq$ 7 or with DI=7 and RRS=0 is received while no message is waiting to be transmitted, the reply shall contain all ZEROs in the MB field. This protocol is also used by air-directed Comm-B messages.

d. Comm-B Broadcast

NOTE: *A Comm-B broadcast is a message directed to all active interrogators in view. Messages are alternately numbered 1, 2 and are available for 18 seconds unless a waiting air-initiated Comm-B interrupts the cycle. Interrogators have no means to cancel the Comm-B broadcast.*

A Comm-B broadcast starts, when no air-initiated Comm-B transaction is in effect, with the insertion of DR codes 4, 5, 6 or 7 into downlink transmissions of DFs 4, 5, 20, 21 and with the starting of the B-timer. On receipt of the above DR codes, interrogators may extract the broadcast message by transmitting RR=16 with DI $\neq$ 7 or with DI=7 and RRS=0 in subsequent interrogations. When the B-timer runs out after 18 ±1 seconds, the transponder will reset the DR codes as required, will discard the previous broadcast message and change from 1 to 2 (or vice versa) the broadcast message number.

If an air-initiated Comm-B transaction is initiated during the broadcasting interval (i.e., while the B-timer is running), the B-timer is stopped and reset, the appropriate code is inserted into the DR field and the Comm-B transaction proceeds per Figure 3-18. The previous Comm-B broadcast message remains ready to be reactivated for 18 ±1 seconds after conclusion of the air-initiated Comm-B transaction.

© EUROCAE, 2003

e. Data Link Capability Report

The data link capability report shall provide the interrogator with a description of the data link capability of the Mode S installation. The report shall be obtained by a ground-initiated Comm-B reply in response to an interrogation containing RR equals 17 and DI is not equal to 7 or DI equals 7 and RRS equals zero (paragraph 3.21.1.12).

(1) Subfields in MR for data link capability report.

The subfields within the MB field of all data link capability reports shall be:

BDS1 A value of 1 shall be inserted in this 4-bit subfield (1-4 of the MB field) as a first part of Comm-B data selector (BDS) code.

BDS2 A value of 0 shall be inserted in this 4-bit subfield (5-8 of the MB field) as a second part of Comm-B data selector (BDS) code.

SCS This 1-bit (34 of the MB field) squitter capability subfield shall report the capability of the transponder to transmit extended squitter position reports. It shall be set to 1 if GICB registers 05 and 06 {HEX} have been updated within the last ten plus or minus one seconds. Otherwise, it shall be set to 0

SIC Surveillance Identifier (SI) code capability report. Transponders which process the SI codes (paragraph 3.18.4.34~~3.18.4.34~~) shall report this capability by setting bit 35 of the MB field to 1 in the datalink capability report. Otherwise it shall be set to zero.

(2) Coding of the Data Link Capability Report

BDS1	=	1	=	Data Link Report
BDS2	=	0	=	Basic Report
BDS2	=	1-15	=	Not assigned.

For BDS2=0 only, bit 33 of the MB field relates to the transponder ability to deliver AIS report with coding as follows:

Bit 33 of the MB field =1, AIS report available

Bit 33 of the MB field =0, No AIS report available from the external data source

Other bits are reserved for ACAS (3.23.1.2~~3.23.1.2~~ b)

(3) Updating of the Data Link Capability Report

At intervals not exceeding four seconds, the transponder compares the current data link capability status with that last reported and if a difference is noted, initiates a revised data link capability report by Comm-B broadcast for BDS1 = 1 and BDS2 = 0.

The transponder shall initiate, generate and transmit the revised data link capability report even if the aircraft data link capability is degraded or lost. To support this requirement, the transponder shall set the BDS subfield for the data link capability report.

© EUROCAE, 2003

NOTE: *The setting of the BDS code by the transponder ensures that a broadcast change of the capability report will contain the BDS code for all cases of data link failure (e.g., the loss of the transponder data link interface).*

3.21.1.13 Aircraft Identification Reporting and AIS Aircraft Identification Subfield in MB

The transponder shall report the aircraft information in the AIS subfield as described below.

a. Aircraft Identification Reporting

A ground-initiated Comm-B request containing RR equals 18 and either DI does not equal 3 or 7 or DI equals 3 or 7 and RRS equals 0 shall cause the resulting reply to contain the aircraft identification in its MB field

b. AIS Aircraft Identification Subfield in MB

The transponder shall report the aircraft identification in the 48-bit (41-88) AIS subfield of MB. The aircraft identification transmitted shall be that employed in the flight plan. When no flight plan is available, the registration marking of the aircraft shall be inserted in this subfield.

c. Coding of the AIS Subfield

The MB field containing the AIS subfield shall be coded as follows:

33	41	47	53	59	65	71	77	83
BDS	CH1	CH2	CH3	CH4	CH5	CH6	CH7	CH8
40	46	52	58	64	70	76	82	88

NOTE: *Aircraft identification coding provides up to eight characters.*

The BDS code for the aircraft identification message shall be BDS1 equals 2 (33-36) and BDS2 equals 0 (37-40).

Each character shall be coded as a 6-bit subset of the International Alphabet Number 5 (IA-5) as illustrated below. The character code shall be transmitted with the high order unit (b6) first and the reported aircraft identification shall be transmitted with its left-most character first. Characters shall be coded consecutively without intervening SPACE code. Any unused character spaces at the end of the subfield shall contain a SPACE character code.

d. Aircraft Identification Capability Reporting

Transponders which respond to a ground-initiated request for aircraft identification shall report this capability in the data link capability report (paragraph 3.21.1.12~~3.21.1.12~~ e) by setting bit 33 of the MB subfield to 1.

e. Change of Aircraft Identification

If the aircraft identification reported in the AIS subfield is changed in flight, then the transponder shall report the new identification to the ground by use of the Comm-B Broadcast Message protocol.

f. Six-Bit Character Set for Coding Aircraft Identification in the AIS Subfield

Each character shall be coded as a six-bit subset of the International Alphabet Number 5 (IA-5) (as specified in Annex 10 Para 3.1.2.9.1.2) as illustrated in the following table.

© EUROCAE, 2003

				b6	0	0	1	1
				b5	0	1	0	1
b4	b3	b2	b1					
0	0	0	0			P	SP	0
0	0	0	1		A	Q		1
0	0	1	0		B	R		2
0	0	1	1		C	S		3
0	1	0	0		D	T		4
0	1	0	1		E	U		5
0	1	1	0		F	V		6
0	1	1	1		G	W		7
1	0	0	0		H	X		8
1	0	0	1		L	Y		9
1	0	1	0		J	Z		
1	0	1	1		K			
1	1	0	0		L			
1	1	0	1		M			
1	1	1	0		N			
1	1	1	1		O			

Example:	b_6	b_5	b_4	b_3	b_2	b_1
H =	0	0	1	0	0	0

The character set shall be transmitted with the most significant bit (b_6) first. The reported aircraft code shall begin with character 1 (abbreviated as CH 1 in the diagram at 3.21.1.13 c). Characters shall be coded consecutively without an intervening SPACE code. Any unused character spaces at the end of the subfield shall contain a SPACE (SP) character code.

3.21.1.14 Linked Comm-A Coding

Peripherals attached to the transponder may use the linked Comm-A protocol. The transponder is transparent to this protocol.

3.21.1.15 Comm-B Multisite Message Protocol

The transponder shall use the Comm-B multisite message protocol of paragraph 3.21.2.

3.21.1.16 Comm-U/V Protocol

The transponder has the optional capability to receive, store and process information contained in the MU field of UF=16 (para 3.23.1.3) and return the result of such process in the MV field (para 3.23.1.4) of subsequent replies.

The protocol described in paragraph 3.20.2.10 applies to the first 32 bits of UF=16 and DF=16.

The protocol for the contents of the MU and MV fields will be as prescribed for that service.

3.21.1.17 Data Handling and Interfaces

In addition to the interfaces described in paragraph 3.20.2.11, the transponder shall have interfaces for indirect data as specified in paragraph 3.17.2.

© EUROCAE, 2003

3.21.1.18 ACAS Crosslink Protocol.

In response to a UF=0 with RL=1 (3.18.4.31) and DS≠0 (3.18.4.11), the transponder shall reply with a DF=16 reply in which the MV field shall contain the contents of the GICB register designated by the DS value. In response to a UF=0 with RL=1 and DS=0, the transponder shall reply with a DF=16 with an MV field of all zeroes. Receipt of a UF=0 with DS≠0 but RL=0 shall have no associated ACAS crosslink action.

3.21.1.19 Invalid AA Condition

If the transponder 24-bit Address Announced (AA) is set to all ONEs or all ZEROs at startup or during operation then this error condition shall be indicated to the pilot and the transponder shall either transition to Standby State or Power Off Condition.

Note 1 : If ACAS II is attached to the transponder than ACAS II also should be disabled and put in Standby State (3.23.4 ACAS-Compatible Transponder Automatic Performance Monitoring) and a transponder error also should be annunciated.

Note 2: If this condition occurs at startup then the transponder should be deactivated until the condition is corrected. If it occurs in flight then the pilot should contact air traffic control immediately to report the condition.

Note 3: Some Mode S transponders may also be able to operate in Mode A/C only (in that case it will reply to P1-P3-P4 short interrogations and will not transmit any squitter). For these transponders if the 24-bit AA is set to all ONEs or ZEROs then it is permissible for the transponder to transition to Mode A/C functionality, the condition is indicated to the pilot, and ACAS II (if attached) is put in Standby state with annunciation to the pilot of a transponder error.

3.21.2 Multisite Message Protocol

Under certain circumstances it may be necessary for several Mode S interrogators, which have overlapping coverage, to operate without being in direct communication with each other. The multisite protocols described herein provide a means to prevent conflicts.

Comm-B protocol shall apply to all Datalink transponders, Comm-C to level 3 and higher, and Comm-D to level 4 and higher.

3.21.2.1 Multisite Data Formats

a. Subfields in SD

The SD field contains information as follows:

(1) If the DI code is 0, 1 or 7:

IIS: The 4-bit (17-20) Interrogator Identifier Subfield contains the self-identification code of the interrogator which is numerically identical to the II code transmitted by the same interrogator in the Mode S-Only All-Call. IIS codes are assigned to interrogators and range from 0 through 15; IIS=0 is not a valid interrogator identifier for multisite purposes.

(2) If the DI code = 1:

MBS: The 2-bit (21, 22) Multisite Comm-B Subfield has been assigned the following codes:

© EUROCAE, 2003

0 = No Comm-B action.
1 = Comm-B reservation.
2 = Comm-B closeout.

MES: The 3-bit (23-25) Multisite ELM Subfield contains reservation and closeout commands for ELM as follows:

0 = No ELM action.
1 = Comm-C reservation
2 = Comm-C closeout.
3 = Comm-D reservation.
4 = Comm-D closeout.
5 = Comm-C reservation and Comm-D closeout.
6 = Comm-C closeout and Comm-D reservation.
7 = Comm-C and Comm-D closeouts.

RSS: The 2-bit (27-28) Reservation Status Subfield shall be coded to request the transponder to report its reservation status in the UM field. The following codes have been assigned:

0 = No request.
1 = Report Comm-B reservation status in UM.
2 = Report Comm-C reservation status in UM.
3 = Report Comm-D reservation status in UM.

(3) If the DI code is 1 or 7:

LOS: The 1-bit (26) Lockout Subfield, if set to ONE, initiates a multisite All-Call lockout to Mode S-Only All-Calls (UF=11) from the interrogator indicated in IIS of the same interrogation. If LOS is set to ZERO no change in lockout state is commanded.

TMS: Tactical Message Subfield, subfield in SD 4 bits, 29 through 32. This subfield is used for identifying linkage of Comm-A messages with "0" indicating an unlinked message. Coding for this field is not described in this document.

(4) If the DI code = 7:

RRS The 4-bit (21-24) reply request subfield in SD shall give the BDS2 code of a requested COMM-B reply. (Refer to paragraph 3.21.1.12 a, and NOTE in paragraph
3.18.4.32
~~3.18.4.32~~
~~3.18.4.32~~).

(5) If the DI code = 2, the SD field is used for extended squitter surface control (Paragraph **3.21.2.6.7**~~**3.21.2.6.7**~~)

(6) If the DI code = 3:

SIS The 6-bit (17-22) surveillance identifier subfield in SD shall contain an assigned SI code of the interrogator (3.18.4.34~~3.18.4.34~~).

LSS The 1-bit (23) lockout surveillance subfield if set to ONE shall

© EUROCAE, 2003

signify a multisite lockout command from the interrogator indicated in SIS. LSS set to ZERO shall be used to signify that no change in lockout state is commanded.

RRS The 4-bit (24-27) reply request subfield in SD shall give the BDS2 code of a requested COMM-B reply. (Refer to paragraph 3.21.1.12 a, and NOTE in paragraph
3.18.4.32
~~3.18.4.32~~
~~3.18.4.32~~).

When DI = 1, PC field processing shall be completed before processing the SD field.

NOTE 1: *If SD field processing were to be performed before PC field processing in an interrogation containing a Comm-B close-out in the PC field and a request or a multisite reservation in the SD field, the results would be incorrect.*

NOTE 2: *Structure of SD if DI=1*

© EUROCAE, 2003

Position	Number of bits	Subfield
17-20	4	IIS
21-22	2	MBS
23-25	3	MES
26	1	LOS
27-28	2	RSS
29-32	4	TMS

Structure of SD if DI=2

Position	Number of bits	Subfield
17-20	4	Not assigned
21-23	3	TCS
24-26	3	RCS
27-28	2	SAS
29-32	4	Not Assigned

Structure of SD if DI=3

Position	Number of bits	Subfield
17-22	6	SIS
23	1	LSS
24-27	4	RRS
28-32	5	Not Assigned

Structure of SD if DI=7

Position	Number of bits	Subfield
17-20	4	IIS
21-24	4	RRS
25	1	Not Assigned
26	1	LOS
27-28	2	Not Assigned
29-32	4	TMS

b. Subfields in UM for Multisite Protocols

If a surveillance or Comm-A interrogation (UF=4, 5, 20, 21) contains DI=1 and RSS other than 0, the following subfields will be inserted into the reply by the transponder.

IIS: The four-bit (14-17) Interrogator Identifier Subfield reports the identity of the interrogator that has made a multisite reservation.

IDS: The two-bit (18-19) Identifier Designator Subfield reports the type of reservation made by the interrogator identified in IIS. Assigned coding is:
0 = no information available.
1 = Comm-B reservation active.
2 = Comm-C reservation active.
3 = Comm-D reservation active

© EUROCAE, 2003

When the interrogation contains DI=0 or 7, or when DI=1 and RSS=0, the transponder shall insert IIS and IDS codes according to a Comm-B reservation if such reservation exists or is presently requested. In the absence of a Comm-B reservation, IIS and IDS codes for an existing or requested Comm-D reservation shall be inserted.

3.21.2.2 Multisite Common Protocols

The multisite timers and the interrogator identity report are common to all multisite message protocols.

a. Multisite Timers

The multisite protocols require three timers in the transponder:

B-timer for Comm-B (TRB).
C-timer for Comm-C (TRC).
D-timer for Comm-D (TRD).

Each multisite timer (T_R) shall run for 18 ±1.0 seconds after starting or restarting and is used for automatic closeout of the respective message type.

NOTE: *Each timer can be stopped (reset) on command from the ground.*

b. Interrogator Identifier Report

Transponders shall insert the interrogator identifier into the UM field of the reply according to the coding of RSS.

3.21.2.3 Multisite Comm-B Protocol (Figure 3-18)

The multisite Comm-B protocol augments the standard Comm-B protocol and when not in use shall not modify the standard process in any way.

a. Multisite Comm-B Reservation

NOTE: *Multisite Comm-B reservations are not necessary for level 5 transponders.*

When the multisite protocol is in use, an interrogator extracts an air-initiated Comm-B by transmitting a surveillance or Comm-A interrogation containing:

RR	=	16 (read air-initiated Comm-B).
DI	=	1 (multisite SD format).
IIS	=	Interrogator's site number.
MBS	=	1 (Comm-B reservation request).

The interrogator may also transmit RSS = 1 (Comm-B reservation status request).

A multisite Comm-B reservation is invalid and shall not be granted by the transponder unless:

- an air-initiated Comm-B message is waiting to be transmitted
- and the requesting interrogation contains RR = 16, DI = 1, MBS = 1, IIS is not zero
- and the B-timer is not running.

© EUROCAE, 2003

Transponder protocol procedures shall depend upon the state of the B-timer as follows:

- B-timer not running
  Store IIS for Comm-B.
  Start B-timer.

- B-timer running and interrogator's IIS equals stored Comm-B IIS
  Restart B-timer.

- B-timer running and interrogator's IIS is not equal to stored Comm-B IIS
  No change to stored IIS or B-timer.

NOTE: *When an interrogator asks for Comm-B reservation status and receives its own site number in the UM field of the reply to an interrogation that contained the multisite Comm-B request, it knows that it is the reserved site for this message and that it should complete the transaction by closing out the message.*

b. Multisite Directed Comm-B Transmissions

If the airborne data system needs to direct a Comm-B message to a specific interrogator, the air-initiated Comm-B protocol shall be used together with the multisite protocol above. When the B-timer is not running, the IIS of the desired destination shall be stored and transmitted in bits 14-17, together with IDS=1 in bits 18 and 19 of the UM field unless UM use is preempted by command from the ground. Simultaneously the B-timer shall be started and code DR=1 transmitted.

The reservation shall not be automatically timed out by the transponder but shall continue until either:

- the message is read and closed out by the reserved site; or
- the message is cancelled by the data link processor.

NOTE: *This protocol is intended to result in delivery of the message only to the reserved site. As in all air-initiated messages, the data link processor may withdraw the message if delivery has not been accomplished within a nominal time or if another air-initiated message is waiting to be sent. In this protocol the B-timer in the transponder is not actually used as a timer. However, it does retain its function as a flag to indicate that a multisite transaction is in progress (see parapraph 3.21.2.3 a).*

c. Multisite Comm-B Closeout

Multisite Comm-B closeout is accomplished using a surveillance or Comm-A interrogation containing:

DI	=	1 (multisite SD format).
IIS	=	Interrogator site number.
MBS	=	2 (Comm-B closeout).

© EUROCAE, 2003

If the IIS of the interrogation equals the stored Comm-B IIS, the stored Comm-B shall be cleared, the B-timer stopped, the DR code 1 for this message reset and the message itself cancelled. If the site numbers do not match, the message shall not be cancelled and the stored Comm-B IIS, B-timer and DR code shall remain unchanged. The transponder shall not close out a multisite air-initiated Comm-B message unless it has been read out at least once by the reserved site.

d. Automatic Comm-B Expiration

If the transponder B-timer runs out before a multisite closeout is accepted, the stored Comm-B IIS shall be set to "0" and the T-register shall be cleared to enable this message to be read and cleared by another site.

e. Multisite Comm-B closeout by PC Command

When the transponder is in the multisite mode, i.e., when the IIS stored for Comm-B is not "0", receipt of a closeout (PC=4) shall have no effect on the transaction unless accompanied by IIS equal to the stored Comm-B IIS in which case the closeout shall be effected in accordance with para 3.21.2.3 c.

3.21.2.4 Multisite Uplink ELM Protocol (Figures 3-19 and 3-20)

NOTE: *The multisite Comm-C protocol augments the standard Comm-C protocol and when not in use does not modify the standard protocol in any way. Codes used in the SD and UM fields for ELM multisite protocols are described in paragraphs 3.21.2.1 a and 3.21.2.1 b.*

a. Multisite Uplink ELM Reservations

NOTE: *Multisite Comm-C reservations are not necessary for level 5 transponders.*

When the multisite protocol is in use, an interrogator makes a reservation for an uplink ELM by transmitting a surveillance or Comm-A interrogation containing:

DI	=	1 (multisite SD format).
IIS	=	Interrogator's site number.
MES	=	1 or 5 (Comm-C reservation request).

The interrogator may also transmit:

RSS	=	2 (Comm-C reservation status request).

Protocol procedure in response to this interrogation shall depend upon the state of the C-timer as follows:

- <u>C-timer not running</u>
  Store IIS for Comm-C.
  Start C-timer.

- <u>C-timer running and interrogator's IIS equals stored Comm-C IIS</u>
  Restart C-timer.

- <u>C-timer running and interrogator's IIS is not equal to stored Comm-C IIS</u>
  No change to stored IIS or C-timer.

© EUROCAE, 2003

NOTE: *When an interrogator asks for Comm-C reservation status and receives its own site number in the UM field of the reply to a reservation interrogation, it proceeds with the delivery of the uplink ELM. Otherwise, ELM activity is not started during this ground antenna scan and a new reservation request is made during the next scan.*

b. Multisite Uplink ELM Delivery

After multisite coordination is accomplished via the surveillance or Comm-A interrogation, uplink ELM delivery shall be as described in paragraph 3.21.3. In addition, the C-timer shall be restarted each time a received segment is stored and the stored Comm-C IIS is not "0."

NOTE: *The requirement that the stored Comm-C IIS be other than "0" prevents the C-timer from being restarted during a non-multisite uplink ELM transaction.*

c. Multisite Uplink ELM Closeout

Multisite Comm-C closeout shall be accomplished upon receipt of a surveillance or Comm-A interrogation containing:

DI	=	1 (Multisite SD format).
IIS	=	Interrogator's site number.
MES	=	2, 6 or 7 (Comm-C closeout).

If the stored Comm-C IIS equals the IIS of the interrogator, the uplink ELM shall be closed out as described in paragraph 3.21.3.1 g, the stored Comm-C IIS shall be cleared and the C-timer stopped. If the site numbers do not match, the message shall not be closed out and the states of the stored Comm-C IIS and the C-timer remain unchanged.

d. Automatic Uplink ELM Closeout

The closeout actions described in paragraph 3.21.2.4 c shall be initiated automatically when the C-timer runs out.

e. Multisite Uplink ELM closeout by PC command

When the transponder is in the multisite mode, i.e., when the IIS stored for Comm-C is not "0," receipt of a closeout (PC=5) shall have no effect on the transaction unless accompanied by IIS equal to the stored Comm-C IIS, in which case the closeout is effected in accordance with 3.21.2.4 c.

3.21.2.5 Multisite Downlink ELM Protocol

NOTE: *The multisite Comm-D protocol augments the standard Comm-D protocol and when not in use does not modify the standard protocol in any way. Codes used in the SD and UM fields for ELM multisite protocols are described in paragraphs 3.21.2.1 a and 3.21.2.1 b.*

a. Initialisation

The transponder shall announce the presence of a downlink ELM of n segments by making the binary code corresponding to the decimal value 15 + n available for insertion in the DR field of a surveillance or Comm-B reply, DF equals 4, 5, 20, 21. This announcement shall remain active until the ELM is closed out or the message is withdrawn.

b. Multisite Downlink ELM Reservation

NOTE: *Multisite Comm-D reservations are not necessary for level 5 transponders.*

© EUROCAE, 2003

When the multisite protocol is in use, an interrogator makes a reservation for ground initiation of a Comm-D message transfer by transmitting a surveillance or Comm-A interrogation containing:

DI	=	1 (multisite SD format).
IIS	=	Interrogator's site number.
MES	=	3 or 6 (Comm-D reservation request).

The interrogator may also transmit:

RSS	=	3 (Comm-D reservation status request).

A multisite downlink ELM reservation shall not be granted by the transponder unless a downlink ELM is waiting to be transmitted.

Protocol procedure in response to this interrogation shall depend upon the state of the D-timer as follows:

- <u>D-timer not running</u>
  Store IIS for Comm-D.
  Start D-timer.

- <u>D-timer running and interrogator's IIS equals stored Comm-D IIS</u>
  Restart D-timer.

- <u>D-timer running and interrogator's IIS is not equal to stored Comm-D IIS</u>
  No change to stored IIS or D-timer.

NOTE: *When an interrogator asks for Comm-D reservation status and receives its own site number in the UM field of the reply to a reservation interrogation, it proceeds to request delivery of the downlink ELM. Otherwise, ELM activity is not started during this ground antenna scan and a new reservation request may be made during the next scan.*

c. Multisite Directed Downlink ELM Transmissions

If the airborne data system needs to direct a Comm-D ELM message to a specific interrogator, a procedure corresponding to the directed Comm-B protocol shall be used. In effect, a "self reservation" is accomplished by storing the IIS of the desired site destination and proceeding with the usual protocol. The stored IIS and IDS=3 shall be transmitted in the UM field unless UM use is preempted by command from the ground or there is a Comm-B reservation.

For a multisite directed Comm-D message, the reservation shall not be automatically timed out but shall continue until either:

- the message is read and closed out by the reserved site; or
- the message is canceled by the data link processor.

© EUROCAE, 2003

NOTE: *This protocol is intended to result in delivery of the message only to the reserved site. As in all downlink ELM messages, the data link processor may withdraw the message if delivery has not been accomplished within a nominal time or if another message is waiting to be sent. In this protocol the D-timer in the transponder is not actually used as a timer. However, it does retain its function as a flag to indicate that a multisite transaction is in progress (see paragraph 3.21.2.3 a).*

d. Multisite Downlink ELM Delivery

After multisite coordination is accomplished by the surveillance or Comm-A interrogation, downlink ELM delivery shall be as described in paragraph 3.21.4.1.

In addition, the D-timer shall be restarted each time a request for Comm-D segments is received and the stored Comm-D IIS is other than "0."

NOTE: *The requirement that the stored Comm-D IIS be other than "0" prevents the D-timer from being restarted during a standard downlink ELM transaction.*

e. Multisite Downlink ELM Closeout

Multisite downlink ELM closeout is accomplished using a surveillance or Comm-A interrogation containing:

DI	=	1 (Multisite SD format).
IIS	=	Interrogator's site number.
MES	=	4, 5, or 7 (Comm-D closeout).

If the stored Comm-D IIS equals the IIS of the interrogator, the downlink ELM shall be closed out as described in paragraph 3.21.4.1 d. The stored Comm-D IIS shall be cleared and the D-timer stopped. If the site numbers do not match, the message is not closed out and the states of the stored Comm-D IIS, the D-timer and the DR code remain unchanged.

f. Automatic Downlink ELM Expiration

If the D-timer runs out, the stored Comm-D IIS shall be set to "0." The Comm-D message and the DR field shall not be cleared. (This makes it possible for another site to read and clear the Comm-D message.)

g. Multisite Downlink ELM closeout by PC Command

When the transponder is in the multisite mode, i.e., when the IIS stored for Comm-D is not "0," receipt of a closeout (PC=6) shall have no effect on the transaction unless accompanied by IIS equal to the stored Comm-D IIS, in which case the closeout is effected in accordance with 3.21.2.5 d.

3.21.2.6 Extended Squitter Protocols

This paragraph is only applicable to transponders equipped for extended squitter.

In addition to the aquisition squitters (paragraph 3.20.2.6) Datalink transponders may be capable of transmitting extended squitters. When a transponder has extended squitter capability it shall not be possible to inhibit acquisition squitters except as specified in this section (3.21.2.6)

The extended (112-bit) squitter contains the same fields as the acquisition squitter (paragraph 3.20.2.6), plus a 56-bit message field that is used to broadcast Automatic Dependent Surveillance (ADS) data. The extended squitter may be used by ACAS and ground ATC users for passive air and surface surveillance.

© EUROCAE, 2003

Draft change proposal [83] after WG 49 meeting 4

Mode S transponders shall transmit extended squitters to support the broadcast of aircraft-derived position, identification and state information.

NOTE: *The broadcast of this type of information is a form of Automatic Dependent Surveillance (ADS) known as ADS-broadcast or ADS-B.*

In addition to the acquisition squitter of 3.20.2.6 the following shall apply:

a. The scheduled acquisition squitter shall be delayed if an extended squitter is in process.

b. Acquisition squitters shall only be transmitted on the surface if the transponder is not reporting the surface position type of Mode S extended squitter

c. Transponders equipped for extended squitter operation should have a means to disable acquisition squitters when extended squitters are being emitted.

NOTE: *This will facilitate the suppression of acquisition squitters when all ACAS units have been converted to receive the extended squitter*

3.21.2.6.1 Extended Squitter Format

The format used for the extended squitter shall be the 112-bit downlink format DF=17 using II=0 in generating the PI field.

3.21.2.6.2 Extended Squitter Types

a. Airborne Position Squitter. The airborne position extended squitter type shall use format DF=17 with the contents of ground-initiated Comm-B register 05 {HEX} inserted in the ME field.

NOTE: *A GICB request (Paragraph 3.21.1.12) containing RR equals 16, DI equals 7 and RRS equals 5 will cause the resulting reply to contain the airborne position report in its MB field.*

b. Surface Position Squitter. The surface position extended squitter type shall use format DF=17 with the contents of ground-initiated Comm-B register 06 {HEX} inserted in the ME field.

NOTE: *A GICB request (Paragraph 3.21.1.12) containing RR equals 16, DI equals 7 and RRS equals 6 will cause the resulting reply to contain the surface position report in its MB field.*

c. Aircraft Identification Squitter. The aircraft identification extended squitter type shall use format DF=17 with the contents of ground-initiated Comm-B register 08 {HEX} inserted in the ME field.

NOTE: *A GICB request (Paragraph 3.21.1.12) containing RR equals 16, DI equals 7 and RRS equals 8 will cause the resulting reply to contain the aircraft identification report in its MB field.*

d. Airborne Velocity Squitter. The airborne velocity extended squitter type shall use format DF=17 with the contents of GICB register 09 {HEX} inserted in the ME field.

NOTE: *A GICB request (Paragraph 3.21.1.12) containing RR equals 16, DI equals 7 and RRS equals 9 will cause the resulting reply to contain the airborne velocity report in its MB field.*

e. Event-driven Squitter. The event-driven extended squitter type shall use format DF=17 with the contents of GICB register 0A {HEX} inserted in the ME field.

NOTE: *A GICB request (Paragraph 3.21.1.12) containing RR equals 16, DI equals 7 and RRS equals 10 will cause the resulting reply to contain the event-driven report in its MB field.*

© EUROCAE, 2003

f. ADS-B Aircraft Trajectory Intent Message

The aircraft Trajectory Intent message type shall use format DF=17 with the contents of the ME field as described in ED-102/DO-260 subparagraph 2.2.3.2.7.1

g. ADS-B Aircraft Operational Coordination Message

The Aircraft Operational Co-ordination Message type shall use format DF=17 with the contents of the ME field as described in ED-102/DO-260 (subparagraph 2.2.3.2.7.2)

h. ADS-B Aircraft Operational Status Message

The Aircraft Operational Status Message type shall use format DF=17 with the contents of the ME field as described in ED-102/DO-260 (subparagraph 2.2.3.2.7.3)

i. "Extended Squitter Aircraft Status" ADS-B Event - Driven Message

The "Extended Squitter Aircraft Status" ADS-B Event - Driven Message type shall use format DF=17 with the contents of the ME field as described in ED-102/DO-260 (Appendix A, Fig. A.8-9, Note 2)

3.21.2.6.3 Extended squitter rate

At power up initialization, the transponder shall commence operation in a mode in which it broadcasts only acquisition squitters (Paragraph 3.20.2.6). The transponder shall initiate the broadcast of extended squitters for airborne position, surface position, airborne velocity and aircraft identification when data are inserted into GICB registers 05, 06, 09 and 08 {HEX} respectively. This determination shall be made individually for each squitter type. The insertion of altitude data into register 05 by the transponder (Paragraph 3.21.2.6.8) shall not satisfy the minimum requirement for initialisation of broadcast of the airborne position squitter. When extended squitters are broadcast, transmission rates shall be as indicated in the following paragraphs. Acquisition squitters shall be reported in addition to extended squitters unless the acquisition squitter is inhibited (Paragraph 3.20.2.6). Acquisition squitters shall always be reported if extended position or velocity squitters are not reported.

The maximum rate for the total number of extended squitter messages transmitted by the transponder shall not exceed 6.2 messages per second.

NOTE 1: *Transponders are limited to no more than 2 Event Driven messages per second. Therefore, the average of 2 Airborne Position, 2 Airborne Velocity, 0.2 Identification, and 2 Event Driven messages per second yields a maximum of 6.2 messages per second.*

NOTE 2: *The transmission of long squitters from aircraft that are unable to report position, velocity or identity is suppressed.*

a. Airborne Position Squitter Rate. Airborne position squitter transmissions shall be emitted when the aircraft is airborne (Paragraph 3.21.2.6.5) at random intervals that are uniformly distributed over the range from 0.4 to 0.6 seconds using a time quantisation of no greater than 15 milliseconds relative to the previous airborne position squitter, with the exceptions as specified in subparagraph f.

b. Surface Position Squitter Rate. Surface position squitters transmissions shall be emitted when the aircraft is on the surface (Paragraph 3.21.2.6.5) using one of two rates depending upon whether the high or low squitter rate has been selected (3.21.2.6.6). When the high squitter rate has been selected, surface position squitters shall be emitted at random intervals that are uniformly distributed over the range from 0.4 to 0.6 seconds using a time quantisation of no greater than 15 milliseconds relative to the previous surface position squitter (termed the high rate). When the low squitter rate has been selected, surface position squitters shall be emitted at random intervals that are uniformly distributed over the range of 4.8 to 5.2 seconds relative to the previous surface position squitter (termed the low rate). Exceptions to this transmission rate are specified in subparagraph f.

© EUROCAE, 2003

NOTE 1: *High and low squitter rate status is determined on board the aircraft.*

NOTE 2: *The low rate is used when the aircraft is stationary and the high rate is used when the aircraft is moving.*

c. Aircraft Identification Squitter Rate. Aircraft identification squitter transmissions shall be emitted at random intervals that are uniformly distributed over the range of 4.8 to 5.2 seconds using a time quantisation of no greater than 15 milliseconds relative to the previous identification squitter when the aircraft is reporting the airborne position squitter type, or when the aircraft is reporting the surface position squitter type and the high surface squitter rate has been selected. When the surface position squitter type is being reported at the low surface rate, the aircraft identification squitter shall be emitted at random intervals that are uniformly distributed over the range of 9.6 to 10.4 seconds relative to the previous identification squitter. Exceptions to these transmission rates are specified in subparagraph f.

d. Airborne Velocity Squitter Rate. Airborne squitter transmissions shall be emitted when the aircraft is airborne (Paragraph 3.21.2.6.5) at random intervals that are uniformly distributed over the range from 0.4 to 0.6 seconds using a time quantisation of no greater than 15 milliseconds relative to the previous velocity squitter, with the exceptions as specified in subparagraph f.

e. Event-driven Squitter Rate. The event-driven squitter shall be transmitted once, each time that GICB register 0A {HEX} is loaded, while observing the delay conditions specified in subparagraph f. The maximum transmission rate for the event-driven squitter shall be limited by the transponder to twice per second. If a message is inserted in the event-driven register and cannot be transmitted due to rate limiting, it shall be held and transmitted when the rate limiting condition has cleared. If a new message is received before transmission is permitted, it shall overwrite the earlier message.

NOTE: *The squitter* transmission rate and the duration of squitter transmissions is application dependent. *Choices made* ***should*** *be the minimum rate and duration consistent with the needs of the application.*

f. ADS-B Aircraft Trajectory Intent Message Broadcast Rates

(1). The Aircraft Trajectory Intent Message(s) (ED-102/DO-260 subparagraph 2.2.3.2.7.1) shall be initiated only when either TCP (or TCP+1) Latitude, TCP (or TCP+1) Longitude, TCP (or TCP+1) Altitude, or TCP (or TCP+1) TTG is available and valid as a minimum.

(2). The Aircraft Trajectory Intent Message shall be broadcast at random intervals that are uniformly distributed over the range of 1.6 to 1.8 seconds using a time quantisation of no greater than 15 milliseconds relative to the previous Aircraft Trajectory Intent Message for as long as data is available to satisfy the requirements of subparagraph “a.” above.

(3). Exceptions to these transmission rate requirements are defined in subparagraph ED-102/DO-260 2.2.3.3.2.9.

NOTE: *The ADS-B system must be capable of processing TCP and TCP+1 Trajectory Intent Messages that are independent each other. That is, that one message is used to transfer of Current TCP* information *while the other message is used to transfer Next TCP (TCP+1) information. Likewise, the broadcast rates for each of the two messages shall be independent.*

© EUROCAE, 2003

g. ADS-B Aircraft Operational Coordination Message Broadcast Rates

(1). The Aircraft Operational Co-ordination Message(s) (ED-102/DO-260 subparagraph 2.2.3.2.7.2) shall be initiated only when, either Paired Address, Runway Threshold Speed, Roll Angle, Go Around, or Engine Out data is available and valid as a minimum.

(2). Once initiated, or if the message data content changes, the Aircraft Operational Co-ordination Message shall be broadcast at random intervals that are uniformly distributed over the range of 1.9 to 2.1 seconds using a time quantisation of no greater than 15 milliseconds relative to the previous Aircraft Operational Co-ordination Message for a period of 30 +/- 1 seconds, assuming no additional change in data content occurred during this period. If data does change, the timer is reset, and the content is updated and sent for 30 +/- 1 seconds.

(3). After the initial broadcast period defined in subparagraph b. above, expires, the Aircraft Operational Coordination Message shall be broadcast at random intervals that are uniformly distributed over the range of 4.8 to 5.2 seconds using a time quantisation of no greater than 15 milliseconds relative to the previous Aircraft Operational Coordination Message for as long as data is available to satisfy the requirements of subparagraph “a.” above.

(4). Exceptions to these transmission rate requirements are defined in ED-102/DO-260 subparagraph 2.2.3.3.2.9.

h. ADS-B Aircraft Operational Status Message Broadcast Rates

(1). The Aircraft Operational Status (ED-102/DO-260 subparagraph 2.2.3.2.7.3) shall be initiated only when either Capability Class or Operational Mode data is available and valid as a minimum.

(2). The Aircraft Operational Status Message shall be broadcast at random intervals that are uniformly distributed over the range of 1.6 to 1.8 seconds using a time quantisation of no greater than 15 milliseconds relative to the previous Aircraft Operational Status Message for as long as data is available to satisfy the requirements of subparagraph “a.” above.

(3). Exceptions to these transmission rate requirements are defined in ED-102/DO-260 subparagraph 2.2.3.3.2.9.

i. “Extended Squitter Aircraft Status” ADS-B Event - Driven Message Broadcast Rate

The “Extended Squitter Aircraft Status” (Type 28), “Emergency/Priority Status” (ADS-B Event - Driven Message Subtype =1) shall be broadcast at random intervals that are uniformly distributed over the range of 0.8 to 1.2 seconds using a time quantisation of no greater than 15 milliseconds relative to the previous Emergency/Priority Status Message for the duration of the emergency condition established in accordance with ED-102/DO-260 Appendix A., Figure A.8-9, Note 2. The delay conditions specified in 2.2.3.3.2.9 shall be observed.

j. Delayed Transmission. Extended squitter transmission shall be delayed in the following circumstances:

(1) the scheduled extended squitter shall be delayed if the transponder is in a transaction cycle (3.20.2.2~~3.20.2.2~~ k); or

(2) the scheduled extended squitter shall be delayed if an acquisition or another type of extended squitter is in process; or

(3) the scheduled extended squitter shall be delayed if a mutual suppression interface is active.

© EUROCAE, 2003

The delayed squitter shall be transmitted as soon as the transponder becomes available.

3.21.2.6.3.1 ADS-B Message Transmission Rate Exceptions

ADS-B Message transmissions shall be delayed under the following conditions:

a. The scheduled message transmission shall be delayed if another ADS-B or Extended Squitter transmission is in process; or

b. The scheduled message transmission shall be delayed if a Mutual Suppression interface is active.

3.21.2.6.3.2 Maximum ADS-B Message Transmission Rates

If the Event-Driven message transmission rate must be reduced in order not to exceed the maximum rate specified in ED-102/DO-260 section 2.2.3.3.2, then transmission priority shall be assigned as follows:

(1) If the Emergency/Priority Status message (ED-102/DO-260 2.2.3.3.2.6.4) is active, it shall continue to be transmitted at the specified once per second rate and other Event-Driven messages shall be allocated equal priority for the remaining capacity.

(2) If the Emergency/Priority Status message is not active, transmission priority shall be allocated equally to all active Event-Driven messages.

NOTE: *Prioritisation should only be necessary when in the Airborne State since a number of messages are not needed during Surface operations. Specifically, TCP and TCP + 1 information should not be needed during Surface operations.*

3.21.2.6.3.3 ADS-B Message Timeout

a. The ADS-B transmission device shall clear all 56-bits of the airborne position, surface position and velocity message if no new data is received within two seconds of the previous input data update. This timeout requirement shall be applied individually for each of the three message types identified.

NOTE 1: *These messages are cleared to prevent the reporting of outdated position and velocity information.*

NOTE 2: *During a register timeout event, the "ME" field of the ADS-B Broadcast Message may contain all zeroes, except for those fields that may be updated due to the receipt of new data.*

b. The ADS-B transmission device shall not clear the Aircraft Identification Message (see ED-102/DO-260 section 2.2.3.2.5) if no new data (neither aircraft type, emitter category, nor identification data) is received within up to 60 seconds of the previous input data update.

NOTE: *The identification message, is not cleared since it contains data that rarely changes in flight and is not frequently updated.*

c. The ADS-B transmission device shall not clear the Intent, Operational Co-ordination, Operational Status, or Event-Driven Messages (see ED-102/DO-260 section 2.2.3.2.7) if no new data is received within up to 60 seconds of the previous input data update.

NOTE: *The event-driven messages do not need to be cleared since contents of such messages are only broadcast once each time that new data is received.*

© EUROCAE, 2003

3.21.2.6.3.4 ADS-B Message Termination

a. The ADS-B transmission device shall terminate broadcast transmissions of the Airborne Position, Surface Position, Aircraft Identification and Type, Velocity, Trajectory Intent, Operational Co-ordination, Aircraft Status, and/or Event - Driven messages if input data necessary to update the particular ADS-B message type is not available for a period of 60 seconds.

NOTE 1: *For the Airborne Position Message, specifically, Altitude Data alone shall be considered necessary and sufficient to maintain broadcast of the message once the message has been initiated.*

NOTE 2: *For the Surface Position Message, the receipt of new Position (i.e., Latitude and Longitude, combined), Movement, or Ground Track data shall be considered necessary and sufficient to maintain broadcast of the message once the message has been initiated.*

NOTE 3: *For all other ADS-B Messages, the receipt of new data necessary to update any single parameter of the message shall be considered necessary and sufficient to maintain broadcast of the message once the message has been initiated.*

b. Each ADS-B Message type shall be terminated individually and independently of all other ADS-B Messages.

3.21.2.6.3.5 ADS-B Transmitted Message Error Protection

Error protection shall be provided by the ADS-B transmitting device encoding all messages in accordance with the requirements provided in section 3.20.2.1 and illustrated in Figure 3-9.

NOTE: *The requirements of section 3.20.2.1 and Figure 3-9 are consistent with the requirements of ICAO Annex 10, Volume IV, second edition, July 1998, section 3.1.2.3.3.*

3.21.2.6.4 Register Timeout

The transponder shall clear all 56-bits of the airborne position, surface position, squitter status and velocity GICB registers 05, 06, 07 and 09 {HEX} if these registers are not updated with data received external to the transponder within two seconds of the previous update. This timeout shall be determined separately for each of these registers.

NOTE 1: *These registers are cleared to prevent the reporting of outdated position, velocity and squitter rate information.*

NOTE 2: *The internal insertion of data by the transponder into these registers (e.g. altitude and surveillance status) does not qualify it as a register update for the purposes of this timeout condition.*

NOTE 3: *The identification register, 08 {HEX}, is not cleared since it contains data that rarely changes in flight and is not frequently updated. The event-driven register, 0A {HEX} does not need to be cleared since its contents are only used once each time that the register is loaded.*

3.21.2.6.5 Airborne/Surface State Determination

Aircraft with an automatic means of determining on-the-ground condition shall use this input to select whether to report the airborne or surface message types. Aircraft without such means shall report the airborne type messages. Aircraft with or without such automatic on-the-ground determination shall use position message types as commanded by control codes in the TCS subfield (Paragraph 3.21.2.6.7). After timeout of the TCS commands, control of airborne/surface determination shall revert to the means described above.

© EUROCAE, 2003

NOTE: *Extended squitter ground stations determine aircraft airborne or surface status by monitoring aircraft position, altitude and ground speed. Aircraft determined to be on the ground that are not reporting the surface position message type will be commanded to report the surface format via the TCS subfield. The normal return to the airborne position message type is via a ground command to report the airborne message type. To guard against loss of communications after takeoff, commands to report the surface position message type automatically timeout.*

3.21.2.6.6 Surface Squitter Rate Control

Surface squitter rate shall be determined as follows:

a. Once per second the contents of the TRS (Paragraph 3.21.2.6.9) shall be read. If the value of TRS is 0 or 1, the transponder shall transmit surface squitters at the high rate. If the value of TRS is 2, the transponder shall transmit surface squitters at the low rate.

b. The squitter rate determined via the TRS subfield shall be subject to being overridden by commands received via the RCS subfield (Paragraph 3.21.2.6.7). RCS code 1 shall cause the transponder to squitter at the high rate for 60 seconds. RCS code 2 shall cause the transponder to squitter at the low rate for 60 seconds. These commands shall be able to be refreshed for a new 60 second period before timeout of the prior period.

c. After timeout and in the absence of RCS codes 1 and 2, control shall return to the TRS subfield.

3.21.2.6.7 Subfields in SD for Extended Squitter

The SD field contains the following information if the DI code is 2:

TCS, the 3-bit (21-23) Type Control Subfield in SD shall control the position type used by the transponder. The following codes have been assigned:

0	=	No position type command.
1	=	Use surface position type for the next 15 seconds.
2	=	Use surface position type for the next 60 seconds.
3	=	Cancel surface type command.
4-7	=	Not assigned.

RCS, the 3-bit (24-26) Rate Control Subfield in SD shall control the squitter rate of the transponder when it is reporting the surface format. This subfield shall have no effect on the transponder squitter rate when it is reporting the airborne position type. The following codes have been assigned:

0	=	No squitter rate command.
1	=	Report high squitter rate for 60 seconds.
2	=	Report low squitter rate for 60 seconds.
3	=	Suppress all surface squitters for 60 seconds.
4	=	Suppress all surface squitters for 120 seconds.
5-7	=	Not assigned.

NOTE 1: *The definition of high and low squitter rate is given in 3.21.2.6.3~~3.21.2.6.3~~*

© EUROCAE, 2003

SAS, the two bit (27-28) Surface Antenna Subfield in SD shall control the transponder diversity antenna that is used for the extended squitter when it is reporting the surface format. This subfield shall have no effect on the transponder diversity antenna selection when it is reporting the airborne position type. The default shall be the top antenna. The following codes have been assigned:

0 = No antenna command, use the top antenna.
1 = Alternate top and bottom antennas for 120 seconds.
2 = Use bottom antenna for 120 seconds.
3 = Return to the default.

3.21.2.6.8 Subfields in ME for Extended Squitter

SSS, the 2-bit (38,39) Surveillance Status Subfield in ME shall report the surveillance status of the transponder when ME contains the airborne position squitter report. The following codes have been assigned:

0 = No status information.
1 = Transponder reporting permanent alert condition (3.20.2.7 a).
2 = Transponder reporting a temporary alert condition (3.20.2.7 a).
3 = Transponder reporting SPI condition (3.20.2.7 c).

Codes 1 and 2 shall take precedence over code 3.

ACS, the 12-bit (41-52) Altitude Code Subfield in ME shall (under control of the ATS subfield, 3.21.2.6.9~~3.21.2.6.9~~) report the barometric altitude when ME contains an airborne position report. The contents of the ACS subfield shall be as specified for the 13-bit AC field (Paragraph 3.18.4.2~~3.18.4.2~~) except that the M bit (bit 26) shall be omitted. When barometric altitude is being reported, the contents of the ACS subfield shall be inserted by the transponder from the same source that would be used to provide the altitude field of a reply to a discrete interrogation. Transponder insertion of altitude data in the ACS subfield shall take place when the 1-bit ATS subfield has the value of ZERO. Transponder insertion of altitude data in the ACS subfield shall be inhibited when the ATS subfield has the value ONE.

NOTE 1: *An ATS subfield of ONE is provided for the future use of navigation-derived height (derived external to the transponder) in place of transponder provided barometric altitude.*

3.21.2.6.9 Subfields in MB for Extended Squitter

A ground-initiated Comm-B request (Paragraph 3.21.1.12~~3.21.1.12~~) containing RR equals 16 and DI equals 3 or 7 and RRS equals 7 shall cause the resulting reply to contain the squitter status report in its MB field.

TRS, the 2-bit (33-34) Transmission Rate Subfield in MB shall report the capability of the aircraft to automatically determine its surface squitter rate and its current squitter rate.

The following codes have been assigned:

0 = No capability to automatically determine surface squitter rate.
1 = Aircraft has selected the high surface squitter rate.
2 = Aircraft has selected the low surface squitter rate.
3 = Unassigned.

© EUROCAE, 2003

NOTE 1: *High and low squitter rate status is determined on board the aircraft.*

NOTE 2: *The low rate is used when the aircraft is stationary and the high rate is used when the aircraft is moving.*

ATS, the 1-bit (35) Altitude Type Subfield in MB shall report the type of altitude being provided in the airborne extended squitter when the reply contains the contents of GICB register 07 {HEX}.

The following codes have been assigned:

0 = Barometric altitude is being reported.
1 = Navigation-derived height is being reported.

3.21.3 Uplink ELM Capability (Level 3) Transponder

This additional capability described in paragraph 1.4.2.1~~1.4.2.1~~ c requires that the transponder shall, in addition to the functions of the level 2 transponder:

a. Process uplink and downlink formats UF=DF=24.

b. Follow the protocols for Comm-C.

c. Follow the applicable procedures for multisite operation (paragraph 3.21.2.4~~3.21.2.4~~).

d. Report Code 4-7 in the CA field (paragraph 3.18.4.5~~3.18.4.5~~).

NOTE: *This transponder uses all the formats shown in Figures 3-3 and 3-4.*

3.21.3.1 Comm-C/ELM Protocol (Figures 3-19 and 3-20)

Uplink ELMs are transmitted in segments with each segment formed by a Comm-C format.

In addition to the segment content in MC, two protocol fields, NC and RC, are used. NC indicates the segment number transmitted.

RC identifies the transmission as initial, intermediate or final.

The minimum length of an uplink ELM is two segments. The transfer of all segments may take place without intervening replies. The minimum time between the beginning of successive Comm-C transmissions is 50 µs.

a. Initializing Segment Transfer

The ELM transaction for an n-segment message (NCs 0 through n-1) shall be initiated upon receipt of a Comm-C transmission containing RC=0. The text transmitted in MC shall be stored. This text is the last segment of the message and carries NC=n-1. Upon receipt of NC, the transponder shall establish the number of further segments to be received and stored. Receipt of an initializing (RC=0) segment shall establish the "setup" which includes the clearing of TAS and all segments of all previous ELMs in the transponder, which is now prepared to accept further segments.

Receipt of another initializing segment shall result in a new setup within the transponder and cause any previously stored segments to be discarded.

A transponder reply shall not be generated on receipt of an initializing segment.

b. Intermediate Segment Transfer

Intermediate segments are characterized by RC=1 and shall be accepted and stored by the transponder only if the setup of the previous paragraph is in effect and if the received NC is smaller than the value stored at receipt of the initializing segment.

A reply shall not be generated on receipt of the intermediate segment.

© EUROCAE, 2003

NOTE: *Intermediate segments may be transmitted in any order.*

c. Final Segment Transfer

The final segment, characterized by RC=2, shall be accepted by the transponder under all circumstances and requires a reply (with the standard 128-μs Mode S reply delay). The segment content shall be stored if setup of 3.21.3.1~~3.21.3.1~~ a is in effect and if the received NC is smaller than the value of the initial segment NC.

d. Completed Message

The message is completed if all segments announced by NC in the initializing segment have been received. If the message is completed, the content shall be transferred to the outside, via the ELM interface of paragraph 3.17.4~~3.17.4~~, and cleared. No later arriving segments shall be stored. The TAS content shall remain unchanged until either a new setup is called for or until closeout.

e. Acknowledgment Reply

The transponder shall acknowledge receipt of a final segment by replying with a Comm-D transmission, with KE=1. KE=1 indicates that the MD field contains subfield TAS that reports which segments have been received. This reply shall be transmitted 128 ± 0,25 μs following receipt of the sync phase reversal of the interrogation delivering the final segment.

The information contained in the TAS subfield shall be continually updated while segments are received and shall not be cleared until a new initializing segment is received or until closeout occurs.

NOTE: *Segments lost in uplink transmission are noted by their absence in the TAS report and are re-transmitted by the interrogator, which will then send further final segments to assess the situation.*

f. TAS Transmission Acknowledgment, Subfield in MD

This 16-bit (17-32) downlink subfield in MD shall report the segments received so far in a Comm-C sequence. Starting with bit 17, which denotes segment number "0", each of the following bits is ONE if the corresponding segment of the sequence has been received. TAS appears in MD if KE=1 in the same reply.

g. Closeout

A closeout transmission informs the transponder that the TAS has been received and that it shall be cleared. This closeout (PC=5) is contained in a surveillance or Comm-A interrogation.

An uncompleted message, present when the closeout is received, shall be closed out.

h. Information Transfer

Comm-C equipped transponders shall be able to transfer received information to the appropriate data sinks (paragraphs 3.17~~3.17~~ and 3.21~~3.21~~ b and c).

3.21.4 Downlink ELM Capability (Level 4) Transponder (Figures 3-21 and 3-22)

This additional capability requires that the transponder shall, in addition to the functions previously described, follow the protocols for:

a. Comm-D ELM.

b. Applicable multisite procedures (pagraph 3.21.2.5~~3.21.2.5~~).

c. Report Code 4-7 in the CA field (paragraph 3.18.4.5~~3.18.4.5~~).

© EUROCAE, 2003

3.21.4.1 The Comm-D/ELM Protocol (Figure 3-21 and 3-22)

Downlink ELMs shall be transmitted only after authorization by the interrogator. The segments to be transmitted are contained in Comm-D replies.

a. Initialization

To request permission to send n-segments, the transponder shall insert the code corresponding to the value 15+n into the DR field of a surveillance or Comm-B reply, DF=4, 5, 20, 21. This announcement shall remain active until the ELM is closed out.

b. Authorization and Transmission

The interrogator requests the transmission of Comm-D segments by a Comm-C interrogation characterized by RC=3. This Comm-C format carries the SRS subfield which is a summary of the segments to be transmitted. On receipt of this authorization the transponder shall transmit the first segment with the standard 128 μs Mode S reply delay followed by subsequent segments at a rate of one every 136 ±1.0 μs by means of Comm-D formats with KE=0 and ND corresponding to the number of the segment in MD. Segments can be transmitted in any order. The authorization process may be repeated by the interrogator.

c. Segment Request Subfield SRS in MC

If a Comm-C interrogation (UF=24) contains RC=3, it also contains a list of segment request-authorizations in the 16-bit (9-24) SRS subfield. Starting with bit 9, which denotes the first segment, each of the following bits is set to ONE if the transmission of the corresponding segment is requested.

d. Closeout

A closeout transmission is used to inform the transponder that all segments have been received and that the DR field shall be reset. This closeout is contained in a surveillance or Comm-A interrogation and shall be effective only after a request for transmission has been complied with at least once (see D-Register in Figures 3-21 and 3-22).

e. Information Transfer

The Comm-D/ELM-equipped transponder shall be able to accept data from the appropriate data sources (paragraphs 3.17~~3.17~~ and 3.21~~3.21~~ b and c).

3.21.5 Enhanced Data Link Capability (Level 5) Transponder

This additional capability requires that the transponder shall, in addition to the functions previously described for level 4 transponders follow the protocols for:

a. Enhanced Comm-B

b. Enhanced Comm-C ELM,

c. Enhanced Comm-D ELM.

3.21.5.1 Enhanced Air-Initiated Comm-B Protocol

NOTE: *The enhanced air-initiated Comm-B protocol provides a higher data link capacity by permitting parallel announcement of air-initiated Comm-B messages to interrogators, one message for each II code. Operation without the need for multisite Comm-B reservations is possible in regions of overlapping coverage for aircraft equipped for the enhanced air-initiated Comm-B protocol. The protocol is fully compliant with the standard multisite protocol and thus is compatible with interrogators that are not equipped for the enhanced protocol.*

© EUROCAE, 2003

3.21.5.1.1 General

Comm-B messages delivered using the multisite protocol may be delivered without a prior reservation. If the enhanced protocols are not supported by both the interrogator and the transponder, the multisite reservation protocols specified in 3.21.2.3~~3.21.2.3~~ shall be used.

The transponder shall be capable of storing 2 or more messages for each of the 16 II codes: (1) an air-initiated or multisite-directed Comm-B message and (2) the contents of registers for BDS1=0 and BDS2=2 through 4.

NOTE: *GICB registers 2 - 4 are used for the Comm-B linking protocol defined in EUROCAE ED-82.*

3.21.5.1.2 Enhanced Multisite Air-Initiated Comm-B Protocol

a. Initialisation

An air-initiated Comm-B message input into the transponder shall be stored in the registers assigned to II=0.

b. Announcement and Extraction

A waiting air-initiated Comm-B message shall be announced in the DR field of the replies to all interrogators for which a multisite directed Comm-B message is not waiting. The UM field of the announcement reply shall indicate that the message is not reserved for any II code, i.e., the IIS subfield shall be set equal to zero. When a command to read this message is received from a given interrogator, the B-timer for the associated interrogator is started and the reply containing the message shall contain an IIS subfield content indicating that the message is reserved for the II code contained in the interrogation from that interrogator. After readout and until closeout, the message shall continue to be assigned to that II code. Once a message is assigned to a specific II code, announcement of this message shall no longer be made in the replies to interrogators with other II codes. If the message is not closed out by the assigned interrogator for the period of the B-timer, the message shall revert back to multisite air-initiated status and the process shall repeat. Only one multisite air-initiated Comm-B message shall be in process at a time.

c. Closeout

A closeout for a multisite air-initiated message shall only be accepted from an interrogator with an II code that is currently assigned to transfer the message.

d. Announcement of the Next Message Waiting

The DR field shall indicate a message waiting in the reply to an interrogation containing a Comm-B closeout to an air-initiated message if an unassigned air-initiated message is waiting and has not been assigned to an II code, or if a multisite-directed message is waiting for that II code (3.21.5.1.3~~3.21.5.1.3~~).

3.21.5.1.3 Enhanced Multisite Directed Comm-B Protocol

a. Initialisation

When a multisite directed message is input into the transponder, it shall be placed in the Comm-B registers assigned to the II code specified for the message and starts the B-timer. If the registers for this II code are already occupied, (i.e., a multisite directed message is already in process to this II code) the new message shall be queued until the current transaction with that II code is closed out.

NOTE: *For a multisite directed message, the B-timer does not expire. A multisite directed message can only be cancelled by the ADLP.*

© EUROCAE, 2003

b. Announcement

Announcement of a Comm-B message awaiting transfer shall be made using the DR field as specified in 3.18.4.10~~3.18.4.10~~ with the destination interrogator II code contained in the IIS subfield as specified in 3.21.2.1~~3.21.2.1~~. The DR field and IIS subfield contents shall be set specifically for the interrogator that is to receive the reply. A waiting multisite directed message shall only be announced in the replies to the intended interrogator. It shall not be announced in the replies to other interrogators.

NOTE 1: *If a multisite directed message is waiting for II=2, the surveillance replies to that interrogator will contain DR=1 and IIS=2. If this is the only message in process, replies to all other interrogators will indicate that no message is waiting.*

NOTE 2: *In addition to permitting parallel operation, this form of announcement enables a greater degree of announcement of Comm-D ELMs. The announcements for the Comm-D ELMs and the Comm-B share the DR field. Only one announcement can take place at a time due to coding limitations. In case both a Comm-B and a Comm-D ELM are waiting, announcement preference is given to the Comm-B. In the example above, if an air-initiated Comm-B was waiting for II=2 and a multisite directed Comm-D ELM was waiting for II=6, both interrogators would see their respective announcements on the first scan since there would be no Comm-B announcement to II=6 to block the announcement of the waiting Comm-D ELM.*

c. Closeout

Closeout shall be accomplished as specified in 3.21.2.3~~3.21.2.3~~.

d. Announcement of the Next Message Waiting

The DR field shall indicate a message waiting in the reply to an interrogation containing a Comm-B closeout if another multisite directed message is waiting for that II code, or if an air-initiated message is waiting and has not been assigned to an II code (see 3.21.1.12~~3.21.1.12~~).

3.21.5.1.4 Enhanced non-multisite Comm-B protocol

The availability of a non-multisite Comm-B message shall be announced to all interrogators. Otherwise, the protocol shall be as specified in 3.21.1.12~~3.21.1.12~~.

3.21.5.1.5 Enhanced Broadcast Comm-B Protocol

A broadcast Comm-B message shall be announced to all 16 II codes. The message shall remain active for the period of the B-timer associated with each II code (i.e. the message shall not be withdrawn after a single B-timer timeout, but is intended to be read-out to each II code within view). The provision for interruption of a broadcast by non-broadcast Comm-B as specified in 3.21.1.12~~3.21.1.12~~ shall apply separately to each II code. When the B-timer period has been achieved for all II codes, the broadcast message shall be automatically cleared as specified in 3.21.1.12~~3.21.1.12~~. A new broadcast message shall not be initiated or announced until the current broadcast has been cleared.

NOTE: *Due to the fact that broadcast message interruption occurs independently for each II code, it is possible that the broadcast message timeout will occur at different times for different II codes.*

© EUROCAE, 2003

3.21.5.2 Enhanced Comm-C ELM Protocol

NOTE: *The enhanced Comm-C ELM protocol provides a higher data link capacity by permitting parallel delivery of Comm-C ELM messages by interrogators, one Comm-C ELM for each II code. Operation without the need for multisite Comm-C ELM reservations is possible in regions of overlapping coverage for interrogators equipped for the enhanced Comm-C ELM protocol. The protocol is fully compliant with the standard multisite protocol and thus is compatible with interrogators that are not equipped for the enhanced protocol.*

3.21.5.2.1 General

Comm-C ELMs delivered using the multisite protocol may be delivered without a prior reservation. If the enhanced protocols are not supported by both the interrogator and the transponder, the multisite reservation protocols specified in 3.21.2.4~~3.21.2.4~~ shall be used.

The transponder shall be capable of storing a sixteen segment message for each of the sixteen II codes.

a. Enhanced Comm-C ELM Reservation

The transponder shall support reservation processing for each II code as specified in 3.21.2.4~~3.21.2.4~~.

NOTE 1: *Reservation processing is required for interrogators that do not support the enhanced protocol.*

NOTE 2: *Since the transponder can handle simultaneous Comm-C ELMs for all sixteen II codes, a reservation will always be granted.*

b. Enhanced Comm-C ELM Delivery and Closeout

The transponder shall process received segments separately for each II code. For each value of II code, Comm-C ELM delivery and closeout shall be performed as specified in 3.21.2.4~~3.21.2.4~~ and 3.21.3.1~~3.21.3.1~~ except that the MD field used to transmit the technical acknowledgement shall also contain the 4-bit (33-36) IIS subfield.

3.21.5.3 Enhanced Comm-D ELM Protocol

NOTE: *The enhanced Comm-D ELM protocol provides a higher data link capacity by permitting parallel delivery of Comm-D ELM messages to interrogators one Comm-D ELM for each II code. Operation without the need for multisite Comm-D ELM reservations is possible in regions of overlapping coverage for interrogators equipped for the enhanced Comm-D ELM protocol. The protocol is fully compliant with the standard multisite protocol and thus is compatible with interrogators that are not equipped for the enhanced protocol.*

3.21.5.3.1 General

Comm-D ELMs delivered using the multisite directed protocol may be delivered without a prior reservation. If the enhanced protocols are not supported by both the interrogator and the transponder, the multisite reservation protocols specified in 3.21.2.5~~3.21.2.5~~ shall be used for multisite and multisite directed Comm-D ELMs.

The transponder shall be capable of storing a sixteen segment message for each of the sixteen II codes.

© EUROCAE, 2003

3.21.5.3.2 Enhanced Multisite Comm-D ELM Protocol

a. Initialisation

A multisite message input into the transponder shall be stored in the registers assigned to II=0.

b. Announcement and Extraction

A waiting multisite Comm-D ELM message shall be announced in the DR field of the replies to all interrogators for which a multisite directed Comm-D ELM message is not waiting. The UM field of the announcement reply shall indicate that the message is not reserved for any II code, i.e., the IIS subfield shall be set equal to zero. When a command to read out this message is received from a given interrogator, the message shall be reserved for the II code contained in the interrogation from that interrogator. After readout and until closeout, the message shall continue to be assigned to that II code. Once a message is assigned to a specific II code, announcement of this message shall no longer be made in the replies to interrogators with other II codes. If the message is not closed out by the associated interrogator for a period of the D-timer, the message shall revert back to multisite status and the process shall repeat. Only one multisite Comm-D ELM message shall be in process at a time.

c. Closeout

A closeout for a multisite message shall only be accepted from the interrogator with an II code that was assigned most recently to transfer the message.

d. Announcement of the Next Message Waiting

The DR field shall indicate a message waiting in the reply to an interrogation containing a Comm-D ELM closeout if an unassigned multisite Comm-D ELM is waiting, or if a multisite directed message is waiting for that II code.

3.21.5.3.3 Enhanced Multisite Directed Comm-D ELM Protocol

a. Initialisation

When a multisite directed message is input into the transponder, it shall be placed in the Comm-D ELM registers assigned to the II code specified for the message. If the registers for this II code are already in use (i.e., a multisite directed Comm-D ELM message is already in process for this II code) the new message shall be queued until the current transaction with that II code is closed out.

b. Announcement

Announcement of a Comm-D ELM message waiting transfer shall be made using the DR field as specified in 3.21.4.1 with the destination interrogator II code contained in the IIS subfield as specified in 3.21.2.5~~3.21.2.5~~. The DR field and IIS subfield contents shall be set specifically for the interrogator that is to receive the reply. A waiting multisite directed message shall only be announced in the replies to the intended interrogator. It shall not be announced in replies to other interrogators.

c. Delivery

The delivery shall be performed as specified in 3.21.4.1. The transponder shall transmit the message contained in the buffer associated with the II code specified in the IIS subfield of the segment request interrogation.

d. Closeout

Closeout shall be accomplished as specified in 3.21.2.5~~3.21.2.5~~ except that a message closeout shall only be accepted from the interrogator with an II code equal to the one that transferred the message.

© EUROCAE, 2003

e. Announcement of the Next Message Waiting

The DR field shall indicate a message waiting in the reply to an interrogation containing a Comm-D ELM closeout if another multisite directed message is waiting for that II code, or if a Comm-D ELM message is waiting that has not been assigned an II code.

3.21.5.3.4 Enhanced Non-Multisite Comm-D ELM Protocol

The availability of a non multisite Comm-D ELM message shall be announced to all interrogators. Otherwise, the protocol shall be as specified in 3.21.4.1.

3.22 ANTENNA

NOTE: The antenna is normally part of the aircraft installation. Antenna requirements are included in this document for information purposes only. Antenna testing is therefore not foreseen in this document.

3.22.1 Frequency of Operation

The antenna shall receive and transmit signals on the nominal operating frequencies of 1 030 and 1 090 MHz.

(See paragraphs 3.1.2~~3.1.2~~, 3.1.3~~3.1.3~~, 3.2~~3.2~~, 3.3~~3.3~~)

3.22.2 Impedance and VSWR

The antenna shall have a nominal impedance of 50 ohms. When terminated in a transmission line representative of the aircraft installation, the VSWR at the transponder end shall not exceed 1.5:1 over the operating frequency range.

3.22.3 Polarisation

The antenna radiation pattern shall be predominantly vertically polarised.

3.22.4 Radiation Pattern

When mounted at the centre of a 1.2 m diameter (or larger) flat, circular ground plane, the antenna gain shall not be less than that of a matched quarter-wave stub, minus 3 dB, over 90% of a coverage volume of:

azimuth: 0° to 360°

elevation: 5° to 30° above the ground plane.

3.23 ACAS-COMPATIBLE MODE S TRANSPONDER

In addition to capabilities defined in paragraphs 3.21.1~~3.21.1~~, 3.21.3~~3.21.3~~ and 3.21.4~~3.21.4~~, a Mode S transponder used in conjunction with ACAS shall have the following capabilities:

a. Ability to handle the following formats:

Format Number	Format Name
UF=16	Long Air-Air Surveillance Interrogation
DF=16	Long Air-Air Surveillance Reply

b. Ability to receive long Mode S interrogations (UF=16) and generate long Mode S replies (DF=16) at a continuous rate of 16.6 milliseconds (60 per second).

© EUROCAE, 2003

NOTE: *Although item b above states the minimum requirement, in certain high density traffic situations, the transponder could receive "bursts" of UF=16 interrogations at a much higher rate. The theoretical upper limit for a burst is 120 UF=16 interrogations received in a 100-millisecond interval, with no more than 10 unique UF=16 interrogations in any 1-second interval and no more than 120 total UF=16 interrogations in any 1-second interval.*

c. Means for delivering the ACAS data content of all accepted interrogations addressed to the ACAS equipment.

d. Antenna diversity (paragraph 3.16~~3.16~~).

e. Mutual suppression capability

f. RF performance compatibility with own aircraft's ACAS. Specifically, when the Mode S transponder transmitter is in the inactive state, the RF power at 1090 MHz ± 3 MHz at the terminals of the Mode S transponder antenna shall not exceed -70 dBm.

NOTE: *This unwanted power restriction is necessary to ensure that the Mode S transponder does not prevent ACAS from meeting its requirements. It assumes that the isolation between the transponder antenna and the ACAS antenna exceeds 20 dB. The resultant interference level at the ACAS RF port will then be below -90 dBm.*

g. Reply rate limiting for Mode S replies. The reply rate limiting device shall protect the transponder from over-interrogation while permitting at least the reply rates required in paragraph 3.11~~3.11~~.

h. The ability to interface with both ACAS Pre-Version 7 and ACAS Version 7 compatible units.

ACAS Version 7 compatible transponder shall annunciate its capability to the onboard ACAS via the transponder/ACAS interface. Likewise, ACAS Version 7 compatible ACAS annunciates its capability to the on-board transponder via the transponder/ACAS interface. The capability of the transponder/ACAS system is then limited to the capability of either the transponder or the ACAS unit having the least capability.

The transponder shall consider the transponder/ACAS system to be compatible with ACAS Version 7 if and only if both the ACAS and the transponder are compatible with ACAS Version 7.

3.23.1 Message Fields and Protocols

3.23.1.1 MA Message, Comm-A used by ACAS

NOTE: *Control of the ACAS sensitivity level can be accomplished by one or more ground-based Mode S sensors through the transmission of Comm-A interrogations, UF=20 or 21, containing ACAS Sensitivity Level Command Messages to the ACAS aircraft. The interrogator identification information required to correlate the sensitivity level command with a particular originating ground-based Mode S sensor site is contained in the IIS or SIS subfield (paragraph 3.21.2.1 a) of SD of the same Comm-A.*

© EUROCAE, 2003

Draft change proposal[100] after WG 49 meeting 4

Subfields in MA for a ACAS Sensitivity Level Command Message

The ACAS sensitivity level command message is contained in the MA field when the first two bits of the MA field (33-34) are set to zero and the decimal value of the sub field formed by bits 35-40 inclusive is equal to 5.

SLC: ACAS Sensitivity Level Command - This 4-bit (41-44) subfield contains a sensitivity level command for the ACAS aircraft.

The transponder shall monitor the TMS (paragraph 3.21.2.1 a(3)) and the first 8 bits in the MA field of Comm-A interrogations UF=20 and 21. If the MA field contains a sensitivity level command message, this shall be provided to the ACAS unit.

3.23.1.2 MB Message, Comm-B used by ACAS

Airborne equipment shall use the MB field (paragraph 3.18.4.18) of Comm-B replies to transmit a Resolution Advisories Report and a Data Link Capability Report to Mode S sensors.

a. Air-Initiated Downlink of Resolution Advisories Report

(1) Air-Initiated Downlink of Resolution advisories Report for all Transponder/ACAS Systems.

The following requirements apply to all transponder/ACAS systems, i.e., both those that are compatible with ACAS Version 7, and those that are not compatible with ACAS Version 7.

Whenever ACAS reports that it has an active Resolution Advisory, the transponder shall indicate that it has a Resolution Advisories report awaiting downlink by setting the DR field in DF=4, 5, 20, 21 replies to DR=2, 3, 6 or 7 as appropriate (see paragraph 3.18.4.10).

Upon receipt of a DF=4, 5, 20 or 21 reply, with DR=2, 3, 6 or 7, a Mode S sensor may request downlink of the resolution advisory using the GICB protocol and setting RR=19 and DI≠7, or RR=19, DI=7 and RRS=0 in a surveillance or Comm-A interrogation (UF=4, 5, 20 or 21) to the ACAS aircraft. When this request is received by own Mode S transponder, own transponder shall reply with a Comm-B reply, DF=20,21, whose MB field contains a Resolution Advisories Report with information provided previously by the ACAS equipment.

While a resolution advisory is active, the content of the MB field in the Resolution Advisories Report shall be updated at least once every second. DR=2, 3, 6 or 7 shall remain set for 18±1.0 seconds following the end of the resolution advisory. In addition the Resolution Advisories Report shall remain "frozen," i.e., shall retain the last ARA and the corresponding RAC, for 18±1.0 seconds following the end of the resolution advisory, unless superseded by a new ARA.

Subfields in MB for Resolution Advisories Report

BDS: Comm B data designator source subfield - This 8-bit (33-40) subfield indicates that a Resolution Advisories Report is contained in MB by BDS1=3 and BDS2=0, the combination of which is equivalent to BDS=48.

ARA: Active Resolution Advisories - This 14-bit (41-54) subfield indicates the currently active resolution advisories (if any) generated by own ACAS unit against one or more threat aircraft.

© EUROCAE, 2003

RAC: Resolution Advisory Complements - This 4-bit (55-58) subfield indicates the currently active resolution advisory complements (if any) received from other ACAS aircraft equipped with on-board resolution capability.

(2) Air-Initiated Downlink of RA report for ACAS Pre-Version 7 compatible systems.

The following requirements apply to all ACAS Pre-Version 7 compatible transponder/ACAS systems in addition to the requirements provided in 3.23.1.2 a (1).

An active Resolution Advisory is indicated by any non-zero value in ARA subfield.

(3) Air-Initiated Downlink of RA report for ACAS Version 7 compatible systems.

The following requirements apply to all ACAS Version 7 compatible transponder/ACAS systems in addition to the requirements provided in 3.23.1.2 a (1).

Subfields in MB for RA Report.

BDS: Comm-B data selector subfield- Additional Information
When BDS1=3 and BDS2=0, the subfields indicated below are contained in MB. For 18±1 seconds following the end of an Resolution Advisory, all MB subfields in the Resolution Advisory report with the exception of bit 59 (RAT) shall retain the information reported at the time the RA was last active.

Except for the RAT bit, the following subfields are provided to the transponder by the ACAS for application in the Resolution Advisory Report.

RAT: Resolution Advisory Terminated Indicator - This 1-bit (59) subfield shall be set by the transponder to indicate that a Resolution Advisory previously generated by ACAS has ceased being generated. RAT shall be set in accordance with the following :

0: The Resolution Advisory indicated by the ARA subfield is currently active. The transponder shall set RAT to ZERO at all times except those defined for RAT=1.

1: The Resolution Advisory indicated by the ARA subfield has been terminated. RAT shall be set to ONE for 18±1 seconds following termination of a previously reported Resolution Advisory. Termination of the Resolution Advisory may result from any of the following events:

© EUROCAE, 2003

a. Notification of the termination of the Resolution Advisory received from own on-board ACAS.
b. Notification of loss of capability received from own on-board ACAS, i.e., ACAS declaration of interface failure.
c. Transponder declaration of interface failure.

The transponder shall monitor the 1-bit Resolution Advisory Indicator (RAI) from ACAS interface to determine whether there is an Active Resolution Advisory. RAI is set to ZERO by ACAS to indicate that there is an active Resolution Advisory. Otherwise, RAI is set to ONE by ACAS. Termination of the Resolution Advisory is indicated by the transition of the RAI from ZERO to ONE at the ACAS interface .

NOTE: *The RAT bit is used to indicate that the Resolution Advisory has been terminated. it may be used, for example, to permit removal of an RA indication from an Air Traffic Control display, or for assessment of RA duration within a particular airspace.*

MTE: Multiple Threat Encounter - This 1-bit (60) subfield indicates whether two or more simultaneous threats are currently being processed by the ACAS threat resolution logic. MTE shall be set in accordance with the following:

0 One threat is being processed by the resolution logic; or no threat is being processed by the resolution logic.
1 Two or more simultaneaous threats are being processed by the resolution logic.

TTI: Threat Type Indicator - This 2 bit (61-62) subfield defines the type of identity data contained in the TID subfield .

TID: Threat Identity Data - This 26-bit subfield (63-88) contains the Mode S address of the threat if the threat is equipped with a Mode S transponder. If the threat is not equipped with a Mode S transponder, then this subfield contains the altitude, range and bearing of the threat.

If two or more threats are simultaneously being processed by the ACAS threat resolution logic, the TID subfield contains the identity or position data for the most recently declared threat.

If TTI=1, the TID subfield contains the Mode S address of the threat in bits 63 through 86, and bits 87 through 88 are set to ZERO.

If TTI=2, The TID subfield contains the following three subfields.

TIDA: Threat Identity Data, Altitude - This 13 bit subfield (63-75) contains the most recently reported Mode-C altitude code of the threat. Coding of the TIDA subfield is consistent with the coding of the Mode-C altitude reply.

© EUROCAE, 2003

TIDR: Threat Identity Data, Range - This 7-bit subfield (76-82) contains the most recent range of the threat estimated by ACAS.

TIDB: Threat Identity Data, Bearing - This 6 bit subfield (83-88) contains the most recent bearing of the threat estimated by ACAS, relative to the ACAS aircraft heading.

b. Data Link Capability Codes in MB.

(1) Data Link Capability codes in MB for all transponder/ACAS Systems.

NOTE 1: *The ground based Mode S sensor learns of the specific data link capabilities on board the aircraft by using the Data Link Capability Report protocol specified in paragraphs 3.21.1.12 e.*

NOTE 2: *The data bits discussed in the following paragraphs are modified in the MB field of the Data Link Capability Report by the Mode S transponder such that the data appears appropriately in response to a request for Data Link Capability Report when BDS1=1 and BDS2=0. As such,these data bits comprise only a small fraction of the entire Data Link capability report which may collate data from multiple sources for transfer in the downlink. Care must be taken to ensure that the data fields discussed in the following paragraphs are not compromised when other sources attempts to update the Data Link Capability Report, and that updating of these bits does not compromise other parts of the Data Link Capability report.*

(2) Data link Capability Codes in MB for ACAS Pre-Version 7 (TCAS version 6.04A) compatible systems.

The following requirements apply to all ACAS Pre-Version 7 compatible transponder/ACAS systems.

The Mode S transponder shall process the ACAS-supplied capability information (RI) for inclusion in the Data Link Capability report. This capability information shall cause the transponder to set the following codes in a Data Link Capability Report:

Subfields in MB for Data link capability report

The following codes shall appear in the MB field for a Data Link capability report when BDS1 = 1 and BDS2 = 0.

Bit 48 equals 1 indicates that the ACAS/transponder interface is operational and the transponder is receiving ACAS RI=2,3 or 4.

When bit 48 is set to ONE and bit 71 is set to ZERO, the ACAS unit that is operational is using the formats for ACAS Pre-Version 7.

Bits 69 and 70 form a capability code subfield which indicates the aircraft's onboard resolution advisory generation capability.

When bit 71 is set to ZERO, then the codes are:

© EUROCAE, 2003

69	70		
0	0	=	No on-board resolution advisory generation capability (ACAS RI ≠ to 3 or 4, or no operational interface).
0	1	=	An on-board vertical-only resolution advisory generation capability exists (ACAS RI=3).
1	0	=	An on-board vertical and horizontal resolution advisory generation capability exists (ACAS RI=4).
1	1	=	Not assigned.

(3) Data link Capability Codes in MB for ACAS Version 7 (TCAS version 7) compatible systems.

The following requirements apply to all ACAS Version 7 compatible transponder/ACAS systems.

Bits 48, 69, 70, 71 and 72 are provided to the transponder by the ACAS and shall appear in the MB field for a Data Link Capability Report when BDS1=1 and BDS2=0.

When Bit 48 is set to ONE and Bit 71 is set to ONE the ACAS unit is operational using the formats for ACAS Version 7.

When bit 71 is set to ONE then the codes are:

69	70		
0	0	=	ACAS II capable of vertical resolution only, only capable of generating TA's
0	1	=	ACAS II vertical only, capable of generating RA's and TA's
1	0	=	ACAS III capable of horizontal and vertical advisories, capable of generating TA's only
1	1	=	ACAS III capable of horizontal and vertical advisories, capable of generating TA's and RA's

NOTE: *Bit 72 is reserved for future use by the ACAS and/or the transponder. Until appropriate coding of this bit has been defined, it should be set to ZERO by the ACAS.*

If the transponder detects a failure of the transponder/ACAS interface, then the transponder shall ensure that Bits 48, 69, 70, 71 and 72 are set to ZERO in the Data Link Capability Report.

NOTE: *A summary of the MB subfield for a Data Link Capability Report is given in paragraph 3.21.1.12 e.*

c. <u>Additional MB message reserved for ACAS Version 7 compatible systems</u>

ACAS Version 7 has the capability of sending the transponder a 56-bit message for storage into one of the GICB registers. When operating in an ACAS Version 7 compatible system, the transponder shall store the ACAS-supplied 56-bit message into the specified transponder GICB register. The GICB register specified for this purpose is 0F {HEX}.

© EUROCAE, 2003

NOTE 1: *The actual structure and coding of the ACAS MB message is not specified in this document and may be defined in the future. It is the intent of ACAS II Version 7 compatible systems that the transponder/ACAS interface be implemented in a manner such that the ACAS can directly format the designated MB message and thereby alleviate the need for the transponder to know the exact structure and coding of the message.*

NOTE 2: *Transponders designed for use in ACAS Version 7 compatible systems should allow for future use of other MB messages sent by ACAS.*

3.23.1.3 MU Message, Comm-U used by ACAS

The Mode S transponder shall supply the MU field (paragraph 3.18.4.22~~3.18.4.22~~) of a long air-air surveillance interrogation, UF=16, to ACAS.

NOTE: *The MU field is used by ACAS to transmit a ACAS Broadcast Interrogation Message containing own transponders's address for the purpose of controlling interference caused by ACAS interrogations, or to transmit a ACAS Resolution Message for air-to-air resolution advisory coordination.*

Subfield in MU for a ACAS Resolution Message

UDS: U-Definition Subfield - This 8-bit (33-40) subfield defines the data content and coding in the remainder of the MU field. For convenience in coding, UDS is expressed in two groups of 4 bits each; UDS1, (33-36), and UDS2, (37-40). ACAS Resolution Messages shall be identified by UDS1=3 and UDS2=0, the combination of which is equivalent to UDS=48.

Subfield in MU for a ACAS Broadcast Message

UDS: U-Definition Subfield - A ACAS Broadcast Interrogation Message is identified by UDS1=3 and UDS2=2, the combination of which is equivalent to UDS=50.

3.23.1.4 MV Message, Comm-V used by ACAS.

a. MV Message, Comm-V Used by ACAS Pre-Version 7 compatible systems.

Upon acceptance of a UF=16 containing an ACAS Resolution Message from a threat ACAS aircraft, the Mode S transponder shall transmit a long air-air surveillance reply, DF=16, to the requesting aircraft. The MV field of this reply shall contain a Coordination Reply Message with information previously provided by own ACAS.

Subfields in MV for a Coordination Reply Message.

VDS: V-Definition Subfield - This 8-bit (33-40) subfield defines the content and coding in the remainder of MV. For convenience in coding, VDS is expressed in two groups of 4 bits each; VDS1, 33 through 36, VDS2, 37 through 40. The airborne ACAS equipment is a source of long air-air reply MV messages containing the VDS1=3 code. A Coordination Reply Message is identified by VDS1=3 and VDS2=0, the combination of which is equivalent to VDS=48.

© EUROCAE, 2003

ARA: Active Resolution Advisories - This 14-bit (41-54) subfield indicates the currently active resolution advisories (if any) generated by own ACAS unit against one or more threat aircraft.

RAC: Resolution Advisory Complements - This 4-bit (55-58) subfield indicates the currently active resolution complements (if any) received from other ACAS aircraft equipped with on-board resolution capability.

b. MV message, Comm-V used by ACAS Version 7 compatible systems.

In addition to the requirements provided in 3.23.1.4 a, ACAS Version 7 compatible system shall provide the following:

Subfields in MV for a Coordination Reply Message

RAT: Resolution Advisory Terminated Indicator- This 1-bit (59) subfield shall be set by the transponder to indicate when an RA previously generated by ACAS has ceased being generated. RAT shall be set in accordance with paragraph 3.23.1.2 a (3).

MTE: Multiple Threat Encounter - This 1-bit (60) subfield indicates whether two or more simultaneous threats are currently being processed by the ACAS threat resolution logic.MTE shall be set in accordance with paragraph 3.23.1.2 a (3).

3.23.1.5 RI Air-to-Air Reply Information

This 4-bit (14-17) downlink field shall be included in special surveillance formats DF=0, 16. This field shall contain information pertaining to replying aircraft. Where airspeed is reported (paragraph 3.18.4.30), the maximum cruising true airspeed flown in normal operations shall be given using the coding shown below.

In addition to the RI coding in paragraph 3.18.4.30, a ACAS-Compatible Mode S transponder shall be capable of receiving additional RI codes from own ACAS for inclusion in special surveillance formats DF=0, 16 for replies to non-acquisition interrogations.

The codes are:

0	=	signifies a reply to an air-air interrogation UF=0 with AQ = 0, No on-board ACAS.
1	=	ACAS on standby
2	=	On-board ACAS with resolution capability inhibited.
3	=	On-board ACAS with vertical-only resolution capability.
4	=	On-board ACAS with vertical and horizontal resolution capability.
5-7	=	Not assigned.
8-15	=	as per para 3.18.4.30

The following protocol shall apply:

On receipt of a short special interrogation, UF=0, or a long air-air interrogation, UF=16, the interrogated Mode S transponder shall reply with a short special reply, DF=0, or a long air-air reply, DF=16, depending on the code contained in the RL field of the interrogation. In this reply, the sensitivity level and the air-to-air reply information shall be supplied in the SL and RI fields. The Mode S transponder shall transmit the SL field supplied by ACAS to indicate the sensitivity level at which ACAS is currently

© EUROCAE, 2003

operating by the Mode S transponder for use in the reply to an acquisition interrogation. For a reply to a non-acquisition interrogation, the Mode S transponder shall set the RI field to 0 to indicate a non-operational ACAS if the conditions for setting bit 48 to 1 (paragraph 3.23.1.2 b) are not satisfied. If RI=0, the SL field has no meaning.

Bit 14 of the RI field replicates the AQ bit (paragraph 3.18.4.4) of the interrogation. That is, codes 0-7 are supplied by ACAS for use in the reply to an air-to-air non-acquisition interrogation; codes 8-15 (indicating aircraft maximum cruising true airspeed) shall be supplied by the Mode S transponder for use in the reply.

3.23.2 General Requirements of the Mode S Interface to the ACAS Equipment

3.23.2.1 Delivery of Messages

The transponder shall transmit a valid Coordination Reply Message (see paragraph 3.23.1.4) in response to an incoming ACAS Resolution Message if, and only if, current transponder indications show that the incoming message can be delivered to the ACAS unit. If the transponder recognizes a valid incoming ACAS Resolution Message but does not send a valid Coordination Reply Message, all data in the incoming message shall be discarded.

NOTE: *This requirement implies that the manufacturer must determine the rate at which incoming interrogations can actually be accepted by the transponder (generally a rate much greater than paragraph 3.23~~3.23~~ b), and the rate at which these interrogations can be passed to the ACAS unit and, if necessary, provide a queuing mechanism to ensure that accepted interrogations are not lost. The transponder must be able to monitor the status of the queue and the status of any other relevant internal structures or pathways so as not to accept new ACAS Resolution Messages if the queue is full or if there is some other condition that would prevent delivery to the ACAS unit (e.g., the transponder/ACAS interface is not established or has failed, or ACAS is indicating no resolution capability).*

If the transponder cannot accept the incoming ACAS Resolution Message contained in the MU field of a long air-air surveillance interrogation UF=16, the transponder shall either not reply to this interrogation, or reply with a long air-air surveillance reply DF=16 with all 56 bits of the MV field equal to 0.

3.23.2.2 Data Integrity

The interface between ACAS and the transponder shall be designed to provide communication in the normal operational aircraft environment for that class of ACAS equipment while assuring error rates of less than one detected error in 10^5 bit transmissions and less than one undetected error in 10^9 bit transmissions for transfers in either direction. Compliance with this requirement shall be demonstrated either by direct test in a simulated operational environment or by analysis based on the known characteristics of proven interface techniques.

The Mode S transponder shall monitor the status of the communications interface with own ACAS. A detected failure in the interface shall be recognized by the transponder as a loss of integrity and shall be treated as a ACAS failure (paragraphs 3.23.1.5).

NOTE*:* *Incomplete data transmission can result in erroneous execution of the ACAS logic algorithms.*

3.23.2.3 ACAS Failure Data Handling

When a ACAS failure is detected, the transponder shall set all areas for storage of ACAS data to zero.

© EUROCAE, 2003

3.23.2.4 Communication Timing

ACAS Resolution Messages that are received by the transponder shall be delivered to the ACAS unit (received by ACAS from the ACAS/transponder interface) within 0.01 second of receipt by the transponder.

NOTE: *This requirement assumes the transponder input message rate of one message every 16.6 milliseconds (60 per second).*

3.23.3 Data provided by ACAS Equipment to the Mode S Transponder

3.23.3.1 Data contained in the Special Surveillance Replies (DF=0, 16)

a. Contents of the SL Field

The Mode S transponder shall report a changed value of the sensitivity level in the SL field in any special surveillance reply, DF=0, 16 generated no later than 250 milliseconds after receipt of the changed SL value from ACAS.

b. Contents of the RI Field

The ACAS equipment provides a value for downlink transmission by the transponder in the RI field whenever the corresponding UF=0 or 16 interrogation contains AQ=0 (tracking interrogation). The Mode S transponder shall report a changed resolution capability in any special surveillance reply, DF=0, 16 generated no later than one second after receipt of the changed RI value from ACAS.

3.23.3.2 Data contained in the Long Air-Air Surveillance Reply (DF=16)

When the Mode S transponder receives a long air-air surveillance interrogation (UF=16) with RL=1 and UDS=48 in the MU field, the transponder shall reply with a long air-air surveillance reply, DF=16. This reply shall contain a Coordination Reply Message (paragraph 3.23.1.4), the contents of which were provided previously by the ACAS equipment.

3.23.3.3 Data contained in Altitude and Identity Surveillance and Comm-B Replies (DF=4, 5, 20, 21)

Contents of the DR Field

The ACAS equipment provides a continuous indication to the Mode S transponder whenever a ACAS resolution advisory exists. This shall cause the transponder to set either code 2, 3, 6 or 7 in the DR field (see paragraph 3.18.4.10) within one second of first receipt of this indication.

3.23.3.4 Data contained in the Altitude and Identity Comm-B Reply (DF=20, 21)

a. Resolution Advisories Report

When the Mode S transponder receives an altitude or identity surveillance or Comm-A interrogation, UF=4, 5, 20 or 21 with RR=19, the transponder shall reply with a Comm-B, DF=20, 21. This reply shall contain a Resolution Advisories Report (paragraph 3.23.1.2 a).

b. Data Link Capability Report

The ACAS equipment indicates to the Mode S transponder its resolution capabilities, which the transponder shall include in the Data Link Capability Report.

NOTE: *Paragraph 3.21.1.12 e specifies that the transponder will recognize a change in on-board data link capability and will automatically set DR=4, 5, 6 or 7, causing the ground system to read out a new Data Link Capability Report.*

© EUROCAE, 2003

3.23.4 ACAS-Compatible Transponder Automatic Performance Monitoring

The transponder shall be capable of detecting malfunctions in the Mode S transponder system that would degrade ACAS functioning, and upon detection shall make this information available to ACAS. In particular, loss of complete Mode S functionality shall trigger an ACAS II system failure.

3.24 POWER INTERRUPTION.

The transponder shall regain full operational capability to within its operational limits within two seconds after the restoration of power following a momentary power interruption.

NOTE: *The transponder is not required to continue operating during momentary power interruptions.*

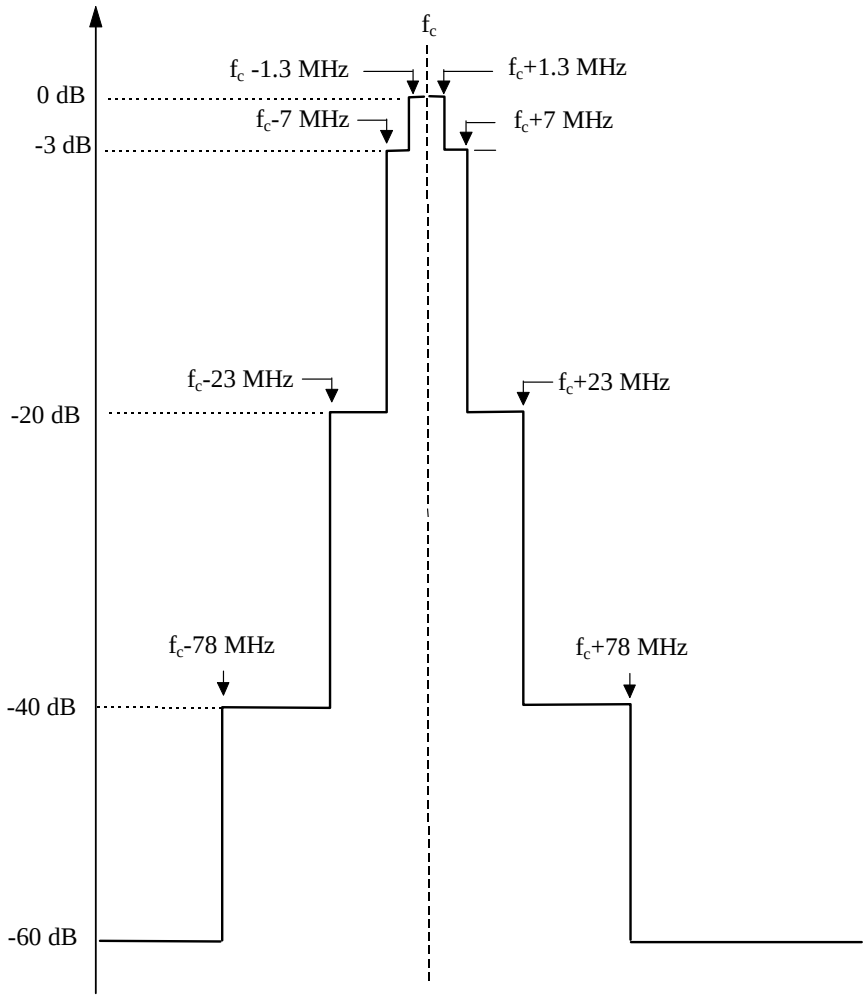

FIGURE 3-1: SPECTRUM LIMITS FOR MODE S TRANSPONDER TRANSMITTER

© EUROCAE, 2003

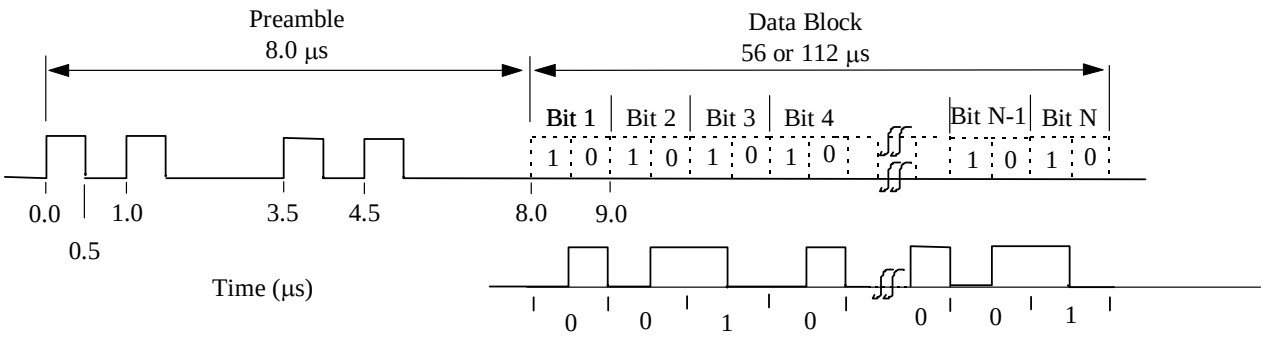

Example: Reply Data Block Waveform Corresponding to bit sequence 0010...001

FIGURE 3-2: MODE S REPLY WAVEFORM

© EUROCAE, 2003

Draft change proposal[111] after WG 49 meeting 4

Format No.	UF								
0	00000	3	RL:1	4	AQ:1	DS:8	10	AP:24	..Short Air-Air Surveillance
1	00001	27 or 83						AP:24	
2	00010	27 or 83						AP:24	
3	00011	27 or 83						AP:24	
4	00100	PC:3	RR:5	DI:3	SD:16			AP:24	..Surveill. Altitude Request
5	00101	PC:3	RR:5	DI:3	SD:16			AP:24	..Surveill., Identity Request
6	00110	27 or 83						AP:24	
7	00111	27 or 83						AP:24	
8	01000	27 or 83						AP:24	
9	01001	27 or 83						AP:24	
10	01010	27 or 83						AP:24	
11	01011	PR:4	IC:4	CL:3	16			AP:24	..Mode S-Only All-Call
12	01100	27 or 83						AP:24	
13	01101	27 or 83						AP:24	
14	01110	27 or 83						AP:24	
15	01111	27 or 83						AP:24	
16	10000	3	RL:1	4	AQ:1	18	MU:56	AP:24	..Long Air-Air Surveillance
17	10001	27 or 83						AP:24	
18	10010	27 or 83						AP:24	
19	10011	27 or 83						AP:24	
20	10100	PC:3	RR:5	DI:3	SD:16	MA:56		AP:24	..Comm-A, Altitude Request
21	10101	PC:3	RR:5	DI:3	SD:16	MA:56		AP:24	..Comm-A, Identity Request
22	10110	27 or 83						AP:24	
23	10111	27 or 83						AP:24	
24	11	RC:2	NC:4	MC:80				AP:24	..Comm-C (ELM)

NOTES:

(1) *XX:M* *denotes a field designed "XX" which is assigned M bits*

N *denotes unassigned coding space with N available bits. These shall be coded as ZEROs for transmission*

(3) *For uplink formats (UF) 0 to 23, the format number corresponds to the binary code in the first 5 bits of the interrogation. Format number 24 is defined as the format beginning with "11" in the first two bit positions while the following three bits vary with the interrogation content*

(4) *All formats are shown for completeness, although a number of them are unused. Those formats for which no application is defined remain undefined in length. Depending on future assignment, they may be short (56-bit) or long (112-bit) formats. Specific formats associated with Mode S capability levels are described in this document*

(5) *The PC, RR, DI and SD fields do not apply to a Comm-A broadcast interrogation*

FIGURE 3-3: OVERVIEW OF MODE S INTERROGATION FORMATS

© EUROCAE, 2003

Draft change proposal[112] after WG 49 meeting 4

Format No.	DF										
0	00000	VS:1	CC:1	1	SL:3	2	RI:4	2	AC:13	AP:24	..Short Air-Air Surveillance
1	00001	27 or 83								AP:24	
2	00010	27 or 83								AP:24	
3	00011	27 or 83								AP:24	
4	00100	FS:3	DR:5	UM:6	AC:13					AP:24	..Surveillance, Altitude Reply
5	00101	FS:3	DR:5	UM:6	ID:13					AP:24	..Surveillance, Identity Reply
6	00110	27 or 83								AP:24	
7	00111	27 or 83								AP:24	
8	01000	27 or 83								AP:24	
9	01001	27 or 83								AP:24	
10	01010	27 or 83								AP:24	
11	01011	CA:3	AA:24							PI:24	..All-Call Reply
12	01100	27 or 83								AP:24	
13	01101	27 or 83								AP:24	
14	01110	27 or 83								AP:24	
15	01111	27 or 83								AP:24	
16	10000	VS:1	2	SL:3	2	RI:4	2	AC:13	MV:56	AP:24	..Long Air-Air Surveillance
17	10001	CA:3	AA:24	ME:56						PI:24	..Extended Squitter
18	10010	27 or 83								AP:24	
19	10011	27 or 83								AP:24	
20	10100	FS:3	DR:5	UM:6	AC:13	MB:56				AP:24	..Comm-B, Altitude
21	10101	FS:3	DR:5	UM:6	ID:13	MB:56				AP:24	..Comm-B, Identity
22	10110	27 or 83								AP:24	
23	10111	27 or 83								AP:24	
24	11 1	KE:1	ND:4	MD:80						AP:24	..Comm-D (ELM)

NOTES:

(1) *XX:M* *denotes a field designed "XX" which is assigned M bits*

P:24 *denotes a 24 bit field reserved for parity information*

(2) *N* *denotes unassigned coding space with N available bits. These shall be coded as ZEROs for transmission*

(3) *For downlink formats (DF) 0 to 23, the format number corresponds to the binary code in the first 5 bits of the interrogation. Format number 24 is defined as the format beginning with " 11 " in the first two bit positions while the following three bits vary with the reply content*

(4) *All formats are shown for completeness, although a number of them are unused. Those formats for which no application is defined remain undefined in length. Depending on future assignment, they may be short (56-bit) or long (112-bit) formats. Specific formats associated with Mode S capability levels are described in this document*

FIGURE 3-4: OVERVIEW OF MODE S REPLY FORMATS

© EUROCAE, 2003

Draft change proposal[113] after WG 49 meeting 4

FIELDS		BITS		REFERENCE PARAGRAPHS	
FIELD	SUB FIELD	NO	POSITION	CONTENT	PROTOCOL
AP		24	33-56	3.18.4.3~~3.18.4.3~~	3.20.2.1~~3.20.2.1~~, 3.20.2.2~~3.20.2.2~~
		24	89-112		
AQ		1	14	3.18.4.4~~3.18.4.4~~	3.18.4.30~~3.18.4.30~~
CL		3	14-16	3.18.4.7~~3.18.4.7~~	3.18.4.7~~3.18.4.7~~
DI		3	14-16	3.18.4.9~~3.18.4.9~~	3.20.2.5~~3.20.2.5~~, 3.21.2.1~~3.21.2.1~~ a, 3.21.1.12~~3.21.1.12~~
DS		8	15-22	3.18.4.11~~3.18.4.11~~	3.21.1.18~~3.21.1.18~~
IC		4	10-13	3.18.4.13~~3.18.4.13~~	3.18.4.13~~3.18.4.13~~
MA		56	33-88	3.18.4.17~~3.18.4.17~~	3.21.1.10~~3.21.1.10~~
MC		80	9-88	3.18.4.19~~3.18.4.19~~	3.21.3.1~~3.21.3.1~~
	SRS	16	9-24	3.21.4.1~~3.21.4.1~~	3.21.4.1~~3.21.4.1~~ b
MU		56	33-88	3.18.4.22~~3.18.4.22~~	3.21.1.16~~3.21.1.16~~
NC		4	5-8	3.18.4.24~~3.18.4.24~~	3.21.3.1~~3.21.3.1~~
PC		3	6-8	3.18.4.26~~3.18.4.26~~	3.20.2.4~~3.20.2.4~~, 3.21.1.12~~3.21.1.12~~
PR		4	6-9	3.18.4.28~~3.18.4.28~~	3.20.2.2~~3.20.2.2~~ i
RC		2	3, 4	3.18.4.29~~3.18.4.29~~	3.21.3.1~~3.21.3.1~~, 3.21.4.1~~3.21.4.1~~ c
RL		1	9	3.18.4.31~~3.18.4.31~~	3.21.1.4~~3.21.1.4~~
RR		5	9-13	3.18.4.32 ~~3.18.4.32~~ ~~3.18.4.32~~	3.21.1.4~~3.21.1.4~~, 3.21.1.12~~3.21.1.12~~ a, 3.21.1.12~~3.21.1.12~~ c
SD		16	17-32	3.18.4.33~~3.18.4.33~~	3.21.1.12~~3.21.1.12~~ a, 3.21.2~~3.21.2~~
	IIS	4	17-20 (DI=0,1,7)	3.18.4.33~~3.18.4.33~~	3.20.2.5~~3.20.2.5~~, 3.21.2~~3.21.2~~
	LOS	1	26 (DI=1,7)	3.21.2.1~~3.21.2.1~~ a	3.20.2.5~~3.20.2.5~~
	LSS	1	23 (DI=3)	3.21.2.1~~3.21.2.1~~	3.20.2.5~~3.20.2.5~~
	MBS	2	21, 22 (DI=1)	3.21.2.1~~3.21.2.1~~ a	3.21.2.3~~3.21.2.3~~ a
	MES	3	23-25 (DI=1)	3.21.2.1~~3.21.2.1~~	3.21.2.4~~3.21.2.4~~ a, 3.21.2.5~~3.21.2.5~~ a
	RCS	3	24-26 (DI=2)		
	RRS	4	24-27 (DI=3)	3.21.2.1~~3.21.2.1~~ a	3.21.1.12~~3.21.1.12~~ a
	RRS	4	21-24 (DI=7)	3.21.2.1~~3.21.2.1~~ a	3.21.1.12~~3.21.1.12~~ a
	RSS	2	27,28 (DI=1)	3.21.2.1~~3.21.2.1~~ a	3.21.2~~3.21.2~~
	SAS	2	27, 28 (DI=2)	3.21.2.6.7~~3.21.2.6.7~~	
	SIS	6	17-22 (DI=3)	3.21.2.1~~3.21.2.1~~	3.20.2.5~~3.20.2.5~~
	TCS	3	21-23 (DI=2)	3.21.2.6.7~~3.21.2.6.7~~	
	TMS	4	29-32 (DI=1,7)	3.21.2.1~~3.21.2.1~~ a	
SL		3	9-11	3.18.4.35~~3.18.4.35~~	3.23.3.1~~3.23.3.1~~
UF		5	1-5 (UF ≠ 24)	3.18.4.36~~3.18.4.36~~	
		2	1,2 (UF = 24)		

FIGURE 3-5A: FIELD INDEX (UPLINK)

© EUROCAE, 2003

Draft change proposal[114] after WG 49 meeting 4

FIELDS FIELD	SUB FIELD	BITS NO	POSITION	REFERENCE PARAGRAPHS CONTENT	PROTOCOL
AA		24	9-32	3.18.4.1~~3.18.4.1~~	3.20.2.10~~3.20.2.10~~
AC		13	20-32	3.18.4.2~~3.18.4.2~~	3.20.2.10~~3.20.2.10~~
AP		24	33-56	3.18.4.3~~3.18.4.3~~	3.20.2.1~~3.20.2.1~~, 3.20.2.2~~3.20.2.2~~
		24	89-112		
CA		3	6-8	3.18.4.5~~3.18.4.5~~	3.20.2.8~~3.20.2.8~~
CC		1	7	3.18.4.6~~3.18.4.6~~	3.21.1.18~~3.21.1.18~~
DF		5	1-5 (DF ≠ 24)	3.18.4.8~~3.18.4.8~~	3.21.1.4~~3.21.1.4~~
		2	1,2 (DF = 24)		
DR		5	9-13	3.18.4.10~~3.18.4.10~~	3.21.4.1~~3.21.4.1~~ a, 3.21.1.12~~3.21.1.12~~ c
FS		3	6-8	3.18.4.12~~3.18.4.12~~	3.20.2.7~~3.20.2.7~~
ID		13	20-32	3.18.4.14~~3.18.4.14~~	3.20.2.10~~3.20.2.10~~
KE		1	4	3.18.4.16~~3.18.4.16~~	3.21.4.1~~3.21.4.1~~ e, 3.21.4.1~~3.21.4.1~~ b
MB		56	33-88	3.18.4.18~~3.18.4.18~~	3.21.1.12~~3.21.1.12~~
	AIS	48	41-88	3.21.1.13~~3.21.1.13~~	3.21.1.13~~3.21.1.13~~
	ARA	14	41-54	3.23.1.2~~3.23.1.2~~ a	3.23.1.2~~3.23.1.2~~ a
	BDS	8	33-40	3.18.4.18~~3.18.4.18~~	3.21.1.12~~3.21.1.12~~ a
	MTE	1	60	3.23.1.2~~3.23.1.2~~ a	3.23.1.2~~3.23.1.2~~ a
	RAC	4	55-58	3.23.1.2~~3.23.1.2~~ a	3.23.1.2~~3.23.1.2~~ a
	RAT	1	59	3.23.1.2~~3.23.1.2~~ a	3.23.1.2~~3.23.1.2~~ a
	SCS	1	34	3.21.1.11~~3.21.1.11~~ g	3.21.1.12~~3.21.1.12~~ f
	SIC	1	35	3.21.1.12~~3.21.1.12~~ f	3.21.1.12~~3.21.1.12~~ f
	TID	26	63-88	3.23.1.2~~3.23.1.2~~ a	3.23.1.2~~3.23.1.2~~ a
	TIDA	13	63-75	3.23.1.2~~3.23.1.2~~ a	3.23.1.2~~3.23.1.2~~ a
	TIDB	6	83-88	3.23.1.2~~3.23.1.2~~ a	3.23.1.2~~3.23.1.2~~ a
	TIDR	7	76-82	3.23.1.2~~3.23.1.2~~ a	3.23.1.2~~3.23.1.2~~ a
	TRS	2	33-34	3.21.2.6.9~~3.21.2.6.9~~	3.21.2.6.9~~3.21.2.6.9~~
	TTI	2	61-62	3.23.1.2~~3.23.1.2~~ a	3.23.1.2~~3.23.1.2~~ a
MD		80	9-88	3.18.4.20~~3.18.4.20~~	3.21.4.1~~3.21.4.1~~
	TAS	16	17-32	3.21.3.1~~3.21.3.1~~ f	3.21.3.1~~3.21.3.1~~ e
ME		56	33-88	3.18.4.21~~3.18.4.21~~	3.18.4.21~~3.18.4.21~~
	ACS	12	41-52	3.21.2.6.8~~3.21.2.6.8~~	3.21.2.6.8~~3.21.2.6.8~~
	ATS	1	35	3.21.2.6.8~~3.21.2.6.8~~	3.21.2.6.8~~3.21.2.6.8~~
	SSS	2	38,39	3.21.2.6.8~~3.21.2.6.8~~	3.21.2.6.8~~3.21.2.6.8~~
MV		56	33-88	3.18.4.23~~3.18.4.23~~	3.21.1.16~~3.21.1.16~~
	ARA	14	41-54	3.23.1.2~~3.23.1.2~~ a	3.23.1.4~~3.23.1.4~~ a
	RAC	4	55-58	3.23.1.2~~3.23.1.2~~ a	3.23.1.4~~3.23.1.4~~ a
	RAT	1	59	3.23.1.2~~3.23.1.2~~ b	3.23.1.4~~3.23.1.4~~ b
	MTE	1	60	3.23.1.2~~3.23.1.2~~ b	3.23.1.4~~3.23.1.4~~ b
ND		4	5-8	3.18.4.25~~3.18.4.25~~	3.21.4.1~~3.21.4.1~~ b
PI		24	33-56	3.18.4.27~~3.18.4.27~~	3.20.2.1~~3.20.2.1~~
		24	89-112		
RI		4	14-17	3.18.4.30~~3.18.4.30~~	3.20.2.10~~3.20.2.10~~
UM		6	14-19	3.18.4.37~~3.18.4.37~~	
	IDS	2	18, 19	3.21.2.1~~3.21.2.1~~ b	
	IIS	4	14-17	3.21.2.1~~3.21.2.1~~ b	
VS		1	6	3.18.4.38~~3.18.4.38~~	3.20.2.10~~3.20.2.10~~

FIGURE 3-5B: FIELD INDEX (DOWNLINK)

© EUROCAE, 2003

UF	Format
0	Short Air-Air Surveillance
4	Surveillance, Altitude Request
5	Surveillance, Identity Request
11	Mode S-Only All-Call

FIGURE 3-6: LEVEL 1 TRANSPONDER: UPLINK FORMATS

DF	Format
0	Short Air-Air Surveillance
4	Surveillance, Altitude Reply
5	Surveillance, Identity Reply
11	All-Call Reply

FIGURE 3-7: LEVEL 1 TRANSPONDER: DOWNLINK FORMATS

© EUROCAE, 2003

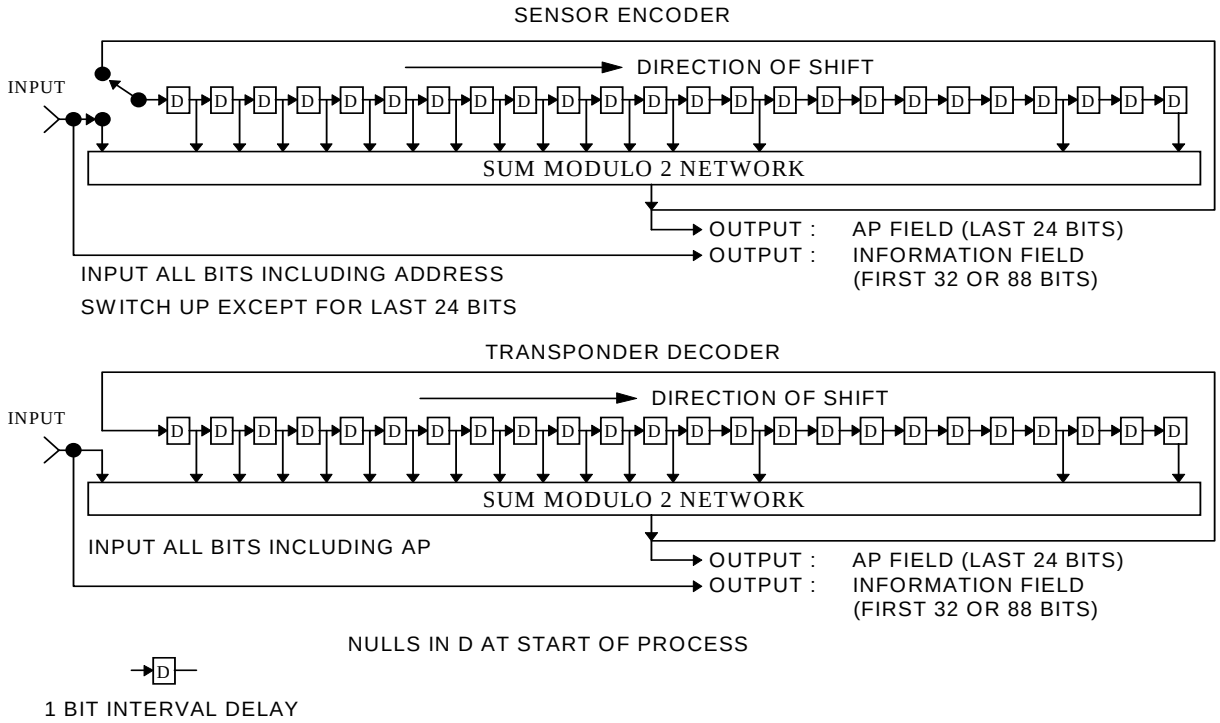

FIGURE 3-8: FUNCTIONAL DIAGRAM OF UPLINK CODING

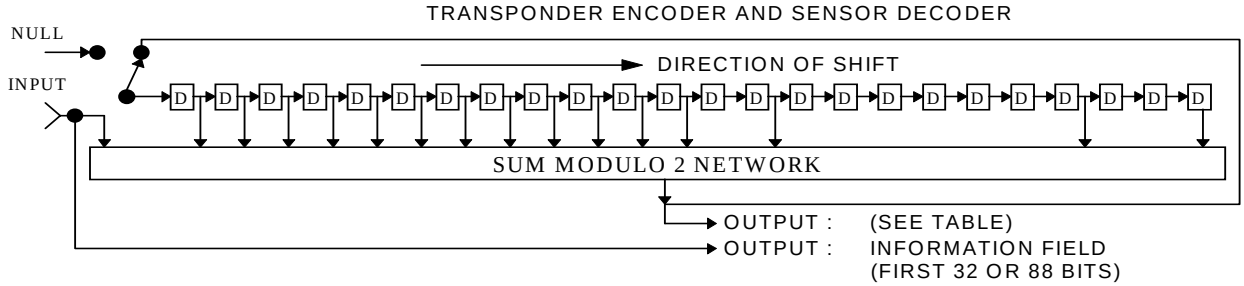

	TRANSPONDER	SENSOR
INPUT	ALL BITS INCLUDING ADDRESS	ALL BITS INCLUDING AP FIELD
OUTPUT	AP FIELD = LAST 24 BITS	ADDRESS = LAST 24 BITS
SWITCH	RIGHT EXCEPT FOR LAST 24 BITS	

NULLS IN D AT START OF PROCESS

1 BIT INTERVAL DELAY

FIGURE 3-9: FUNCTIONAL DIAGRAM OF DOWNLINK CODING

© EUROCAE, 2003

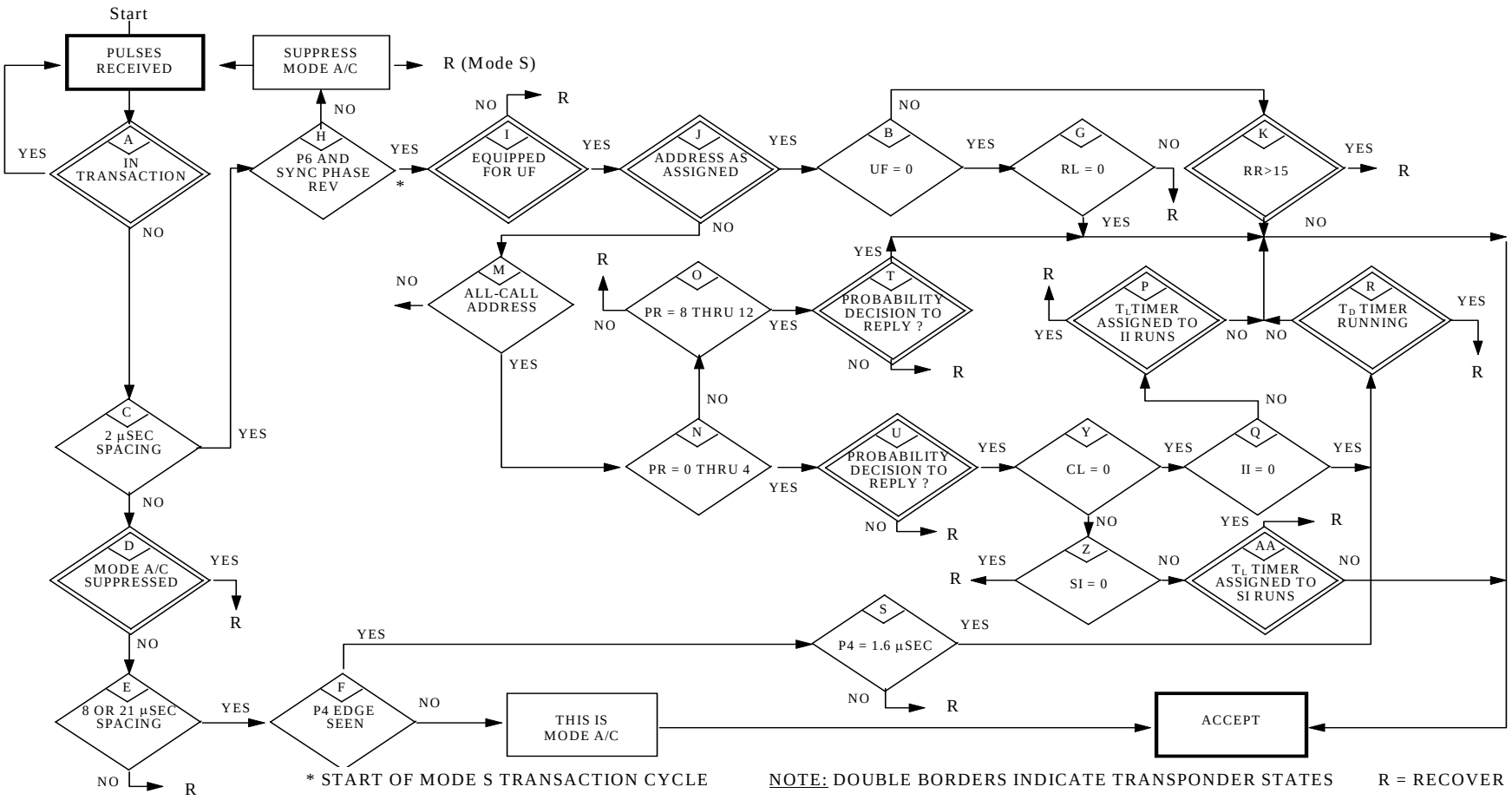

FIGURE 3-10: LEVEL 1 TRANSPONDER: INTERROGATION ACCEPTANCE

© EUROCAE, 2003

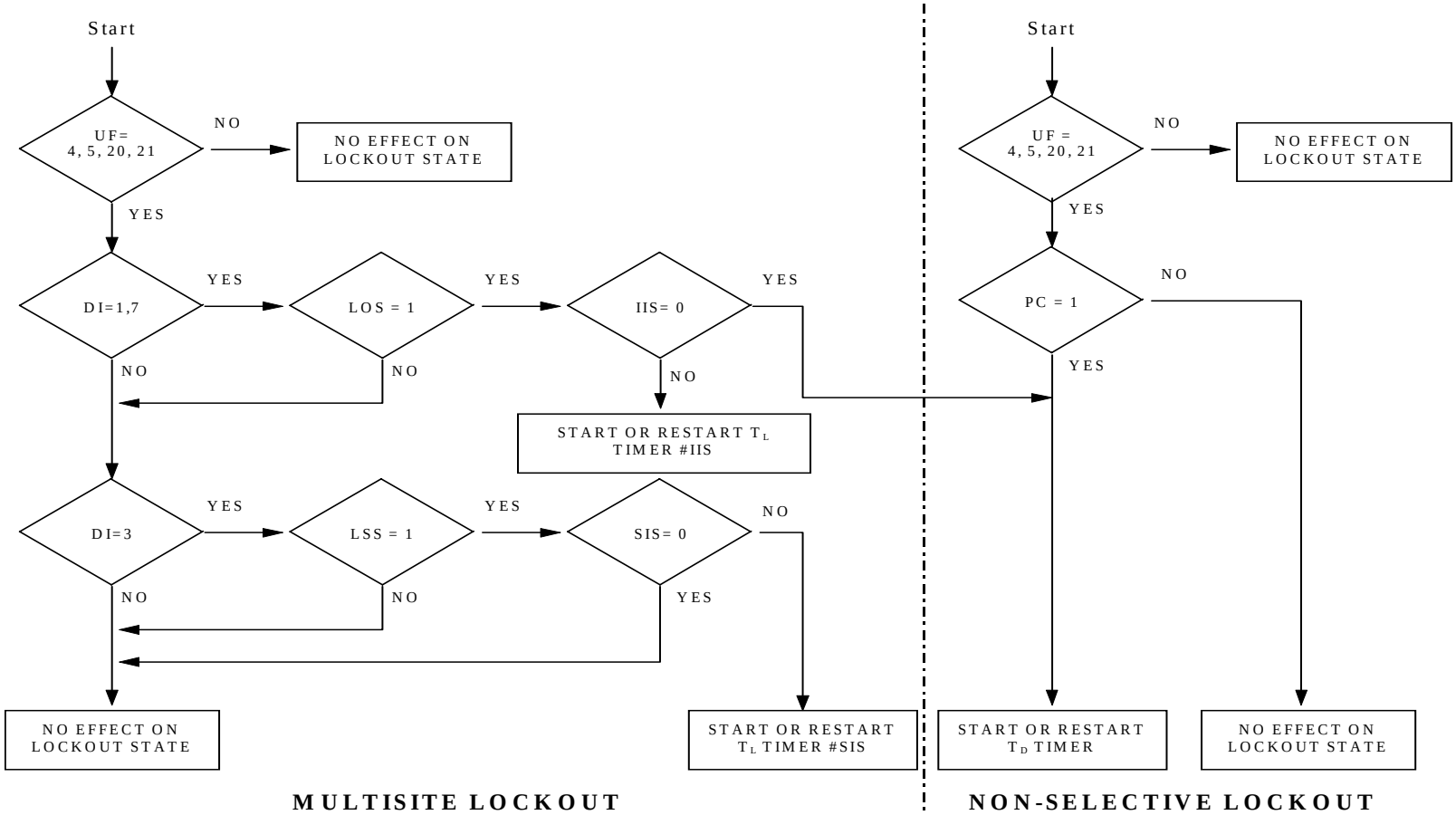

NOTE: For actions of TD, TL, IIS and SIS see acceptance protocol

FIGURE 3-11: LOCKOUT PROTOCOL

© EUROCAE, 2003

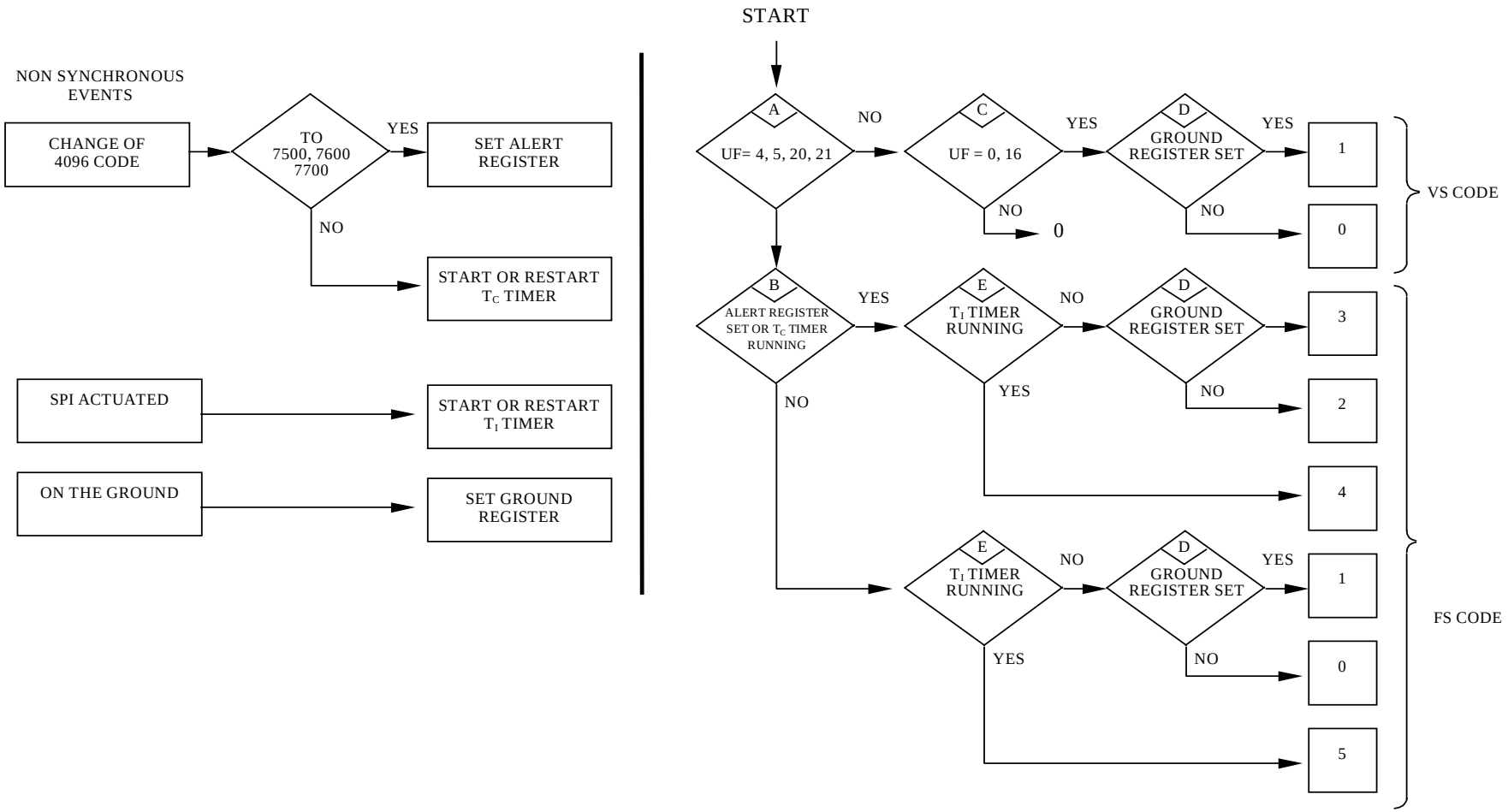

FIGURE 3-12: FLIGHT STATUS AND VERTICAL STATUS PROTOCOL

© EUROCAE, 2003

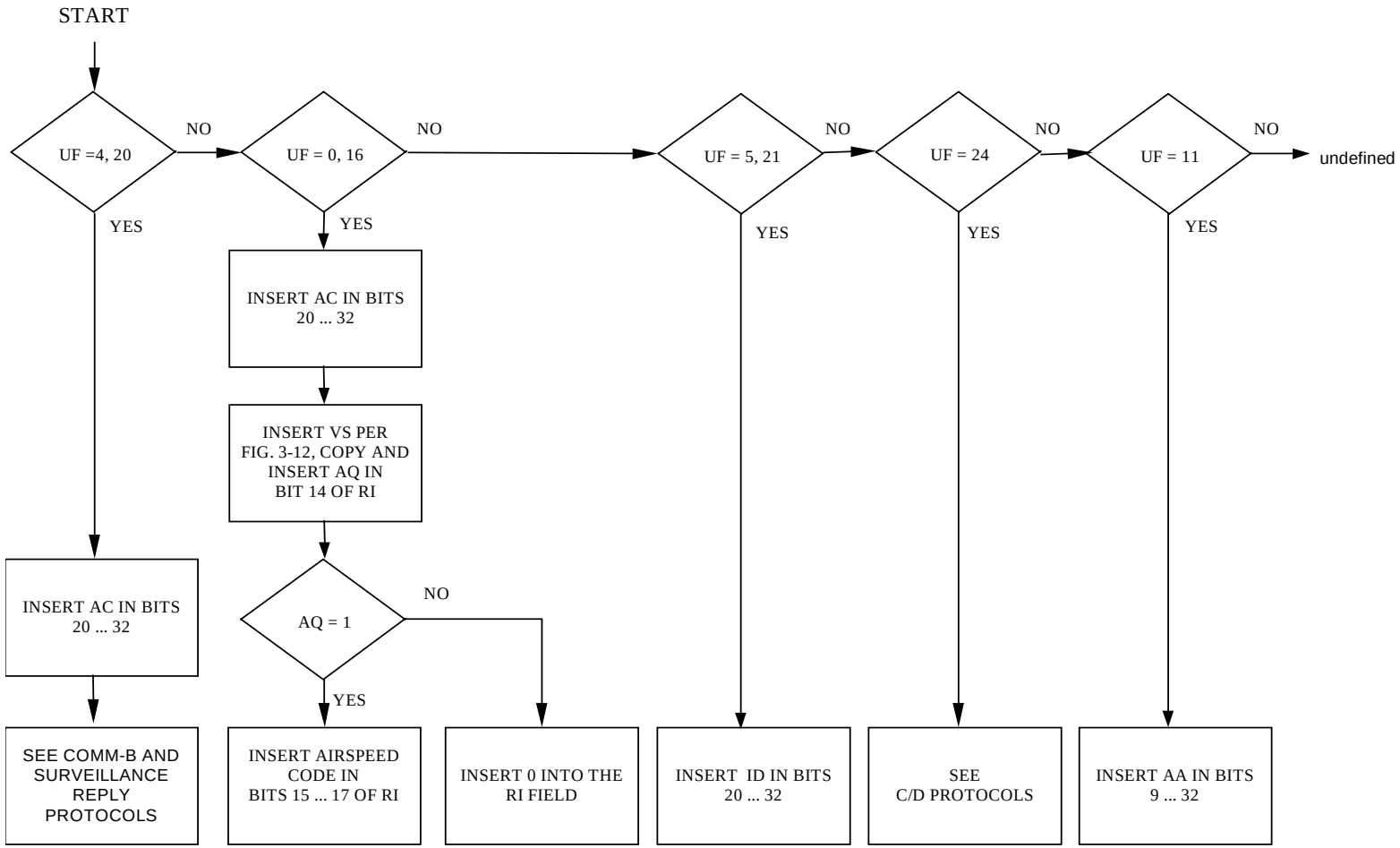

FIGURE 3-13: REPLY CONTENT

© EUROCAE, 2003

Draft change proposal[121] after WG 49 meeting 4

UPLINK FORMATS

UF	Format
0	Short Air-Air Surveillance
4	Surveillance, Altitude Request
5	Surveillance, Identity Request
11	Mode S-Only All-Call
16	Long Air-Air Surveillance
20	Comm-A, Altitude Request
21	Comm-A, Identity Request

DOWNLINK FORMATS

DF	Format
0	Short Air-Air Surveillance
4	Surveillance, Altitude Reply
5	Surveillance, Identity Reply
11	All-Call Reply
16	Long Air-Air Surveillance
17	Extended Squitter
20	Comm-B, Altitude Reply
21	Comm-A, Identity Reply

FIGURE 3-14: TRANSPONDER FORMATS FOR LEVEL 2 TRANSPONDER

NOTE 1: *Uplink and downlink formats 16 are used in ACAS applications and are optional*

NOTE 2: *Downlink format 17 is only used for extended squitter and is optional*

© EUROCAE, 2003

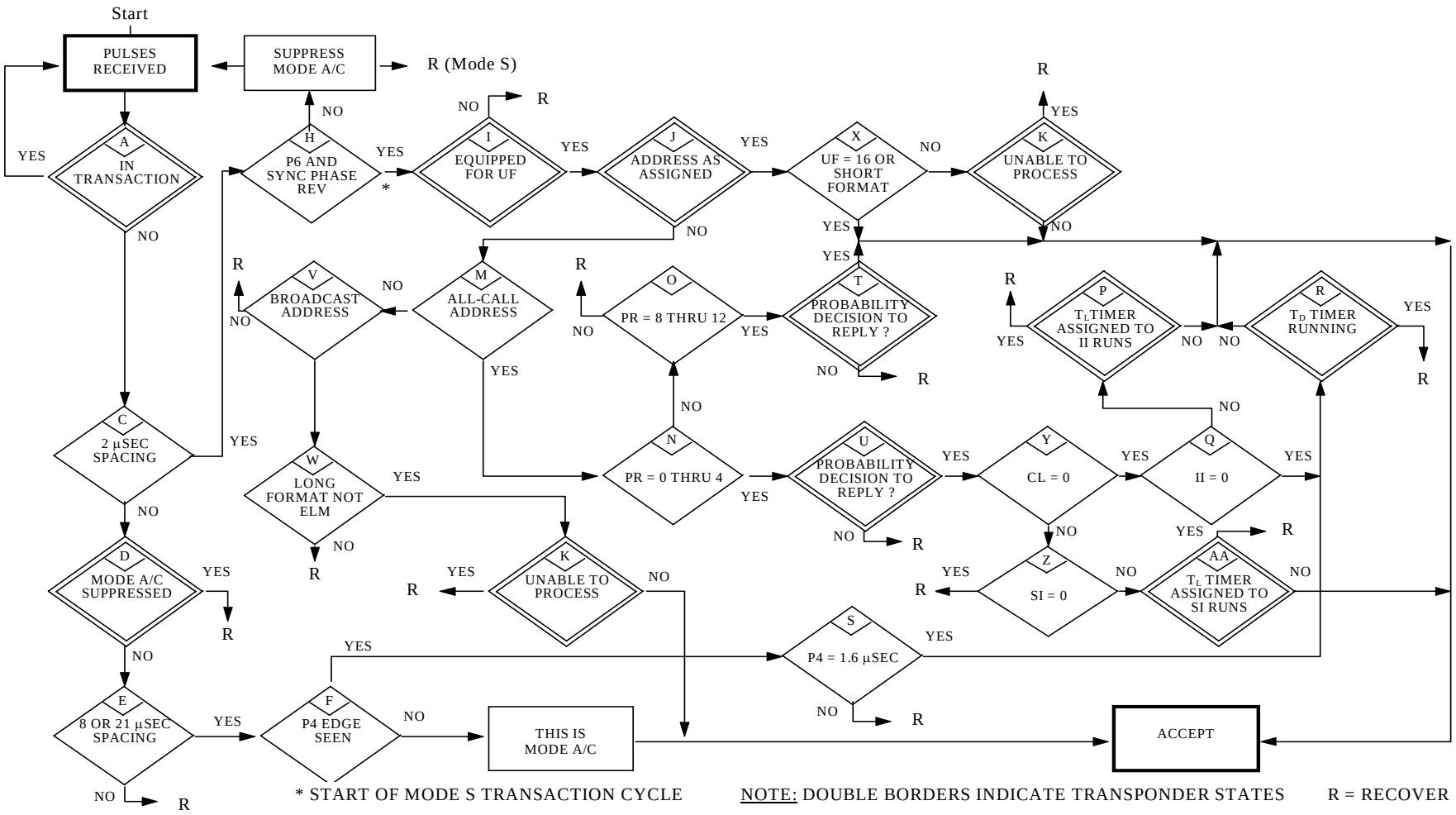

FIGURE 3-15: DATA LINK TRANSPONDER: INTERROGATION ACCEPTANCE

© EUROCAE, 2003

Draft change proposal[123] after WG 49 meeting 4

Interrogation UF	Special Condition	Reply DF
0	- RL = zero	0
	- RL = 1	16*
4	- RR less than 16	4
	- RR equal to or greater than 16	20
5	- RR less than 16	5
	- RR equal to or greater than 16	21
11	- Transponder locked out to interrogator identifer II or surveillance identifier SI	No Reply
	- Stochastic reply test fails	No Reply
	- otherwise	11
16	- RL = zero	0
	- RL = 1	16*
	- Broadcast Address	No reply
20	- RR less than 16	4
	- RR equal to or greater than 16	20
	- Broadcast Address	No reply
21	- RR less than 16	5
	- RR equal to or greater than 16	21
	- Broadcast Address	No reply
24	- RC = 0 or 1	No reply
	- RC = 2	24
	- RC = 3	Multiple 24's
Others	---------	Not Assigned

NOTE: *A broadcast address consists of 24 ONEs on uplink formats UF=20 and UF=21 and also if so equipped for UF = 16.*

** No reply if transponder is not equipped to send DF = 16*

FIGURE 3-16: ALL DATA LINK TRANSPONDERS: COORDINATION

© EUROCAE, 2003

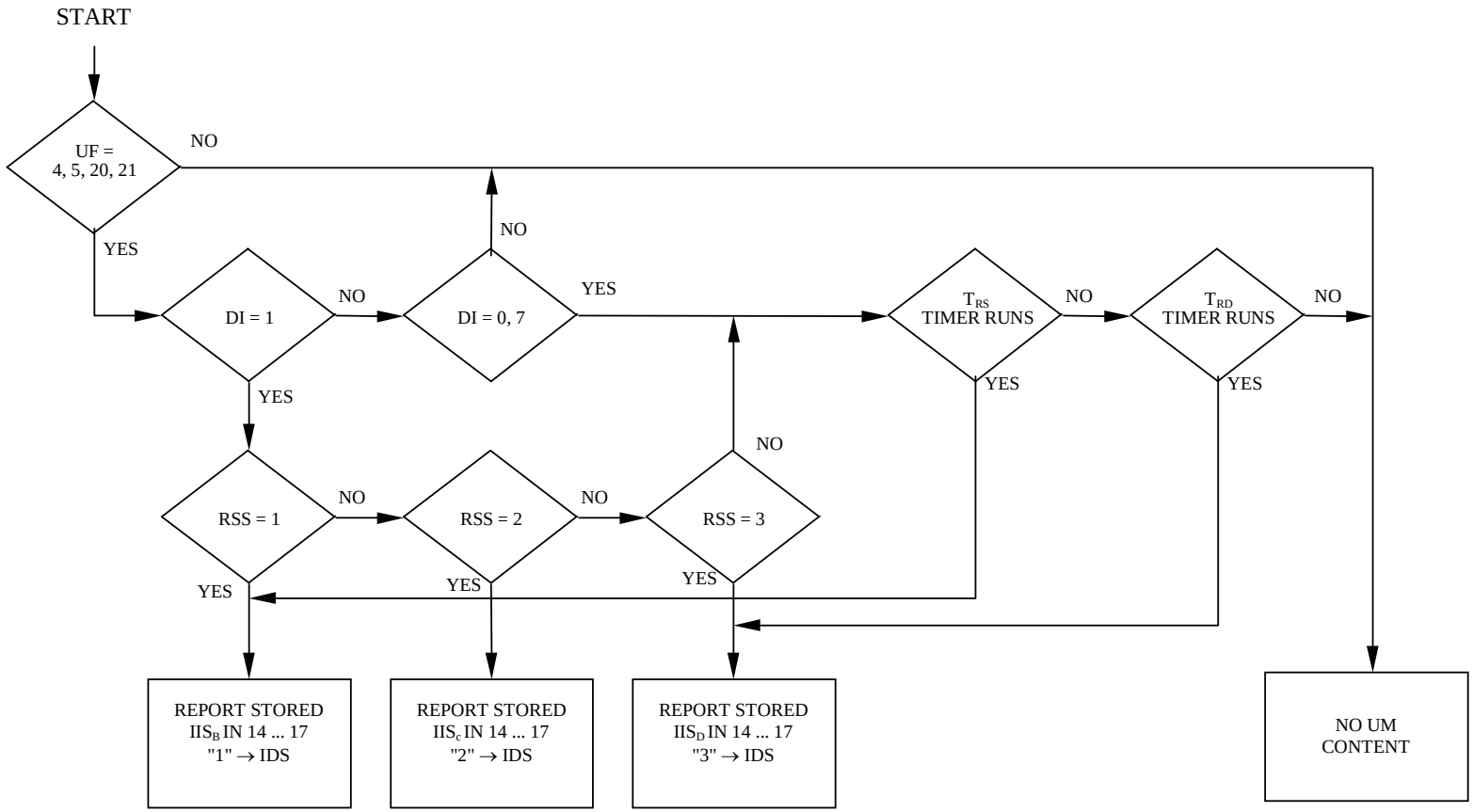

FIGURE 3-17: UM PROTOCOL

© EUROCAE, 2003

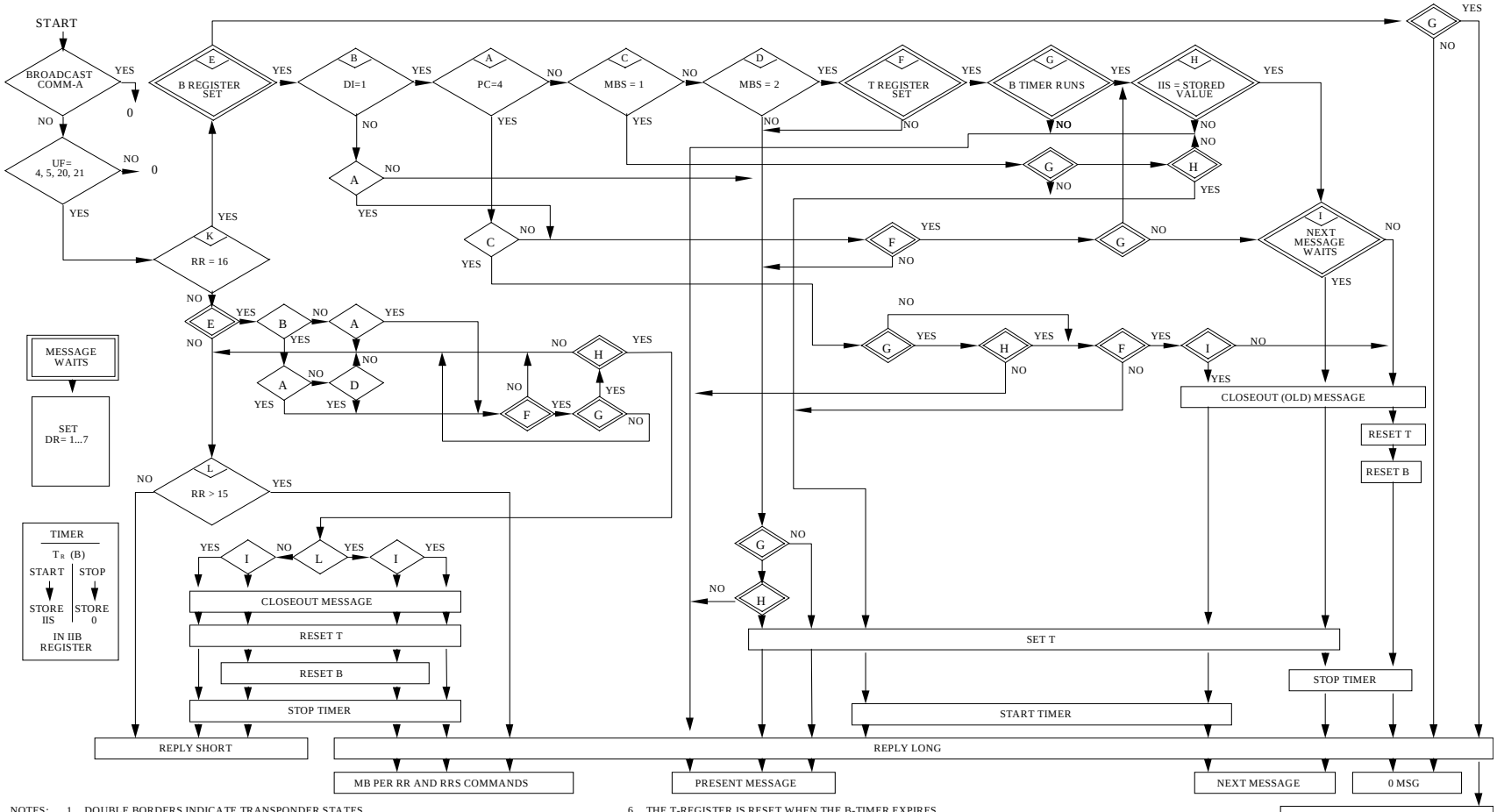

NOTES:
1. DOUBLE BORDERS INDICATE TRANSPONDER STATES
2. THE DECISION IN DIAMOND "K" IS "YES" ONLY IF RR=16 AN D EITHER DI ≠ 7 AND RRS = 0
3. "0" INDICATES TERMINATION OF THE PROCESS
4. THE T-REGISTER INDICATES WHETHER THE MESSAGE HAS BEEN READ AT LEAST ONCE
5. THE B-TIMER DOES NOT EXPIRE FOR A MULTISITE-DIRECTED COMM-B MESSAGE
6. THE T-REGISTER IS RESET WHEN THE B-TIMER EXPIRES
7. ADDITIONAL PROCESSING FOR MULTISITE-DIRECTED COMM-B TRANSMISSIONS IS DEFINE D IN 3.21.2.3.b
8. ILS IS ONLY DEFINED WHEN DI = 0, 1 or 7
9. THE PC FIELD PROCESSING MUST BE COMPLETED BEFORE ANY SD FIELD PROCESSING
10. ADDITIONAL INSTANCES OF THE SAME DECISION DIAMOND ARE REPRESENTED BY A SMALL DIAMOND CONTAINING ONLY THE LETTER

FIGURE 3-18: DATA LINK TRANSPONDERS: B-PROTOCOL

© EUROCAE, 2003

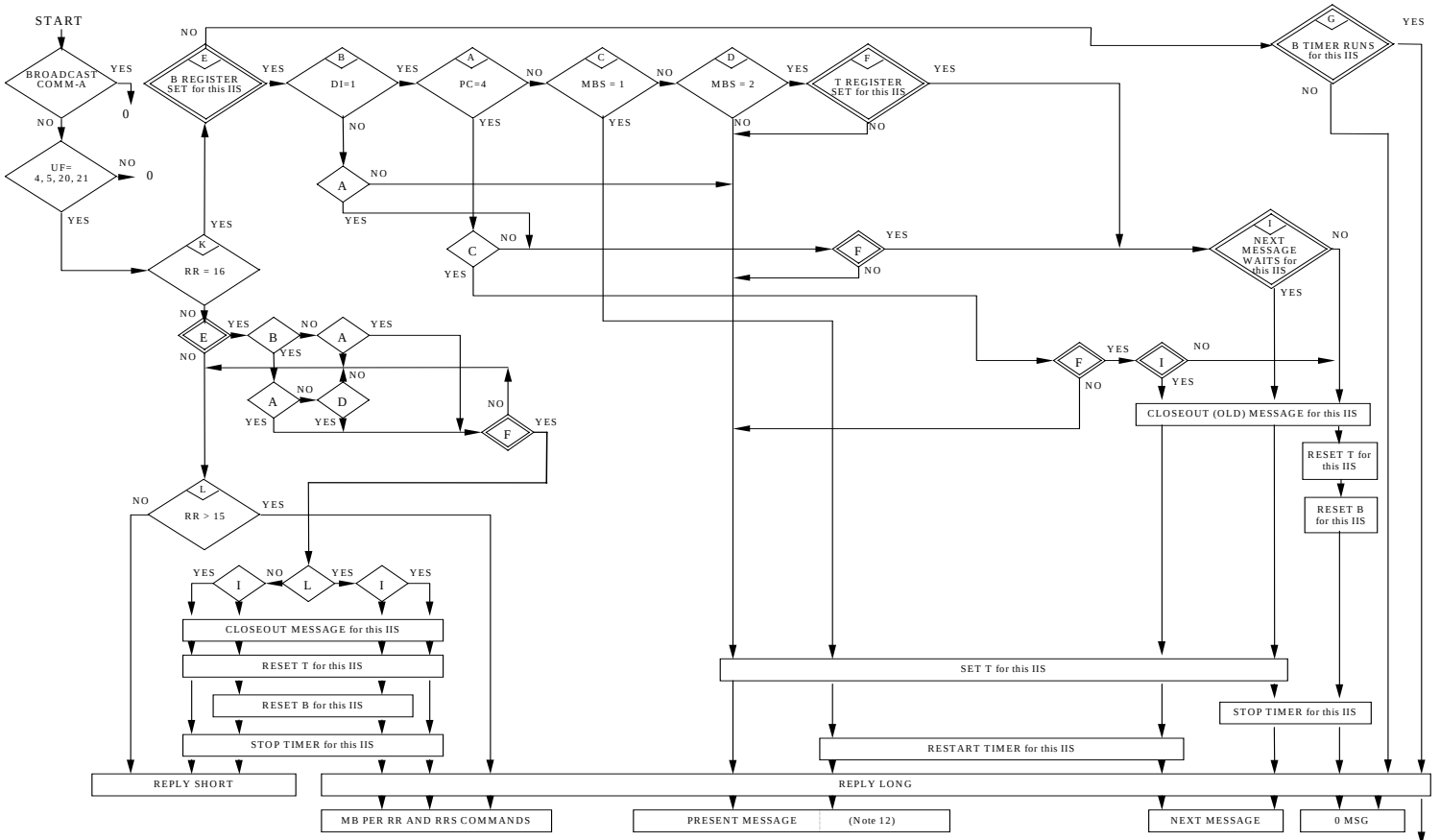

NOTES:
1. DOUBLE BORDERS INDICATE TRANSPONDER STATES
2. THE DECISION IN DIAMOND "K" IS "YES" ONLY IF RR=16 AND EITHER DI≠7 OR DI = 7 AND RRS = 0
3. "0" INDICATES TERMINATION OF THE PROCESS
4. THE T-REGISTER INDICATES WHETHER THE MESSAGE HAS BEEN READ AT LEAST ONCE
5. THE B-TIMER DOES NOT EXPIRE FOR A MULTISITE-DIRECTED COMM-B MESSAGE
6. THE T-REGISTER IS RESET WHEN THE B-TIMER EXPIRES
7. ADDITIONAL PROCESSING FOR MULTISITE-DIRECTED COMM-B TRANSMISSIONS IS DEFINED IN 3.21.2.3.b
8. ILS IS ONLY DEFINED WHEN DI = 0, 1 or 7
9. THE PC FIELD PROCESSING MUST BE COMPLETED BEFORE ANY SD FIELD PROCESSING
10. THE FLOWCHARTS OF FIGURE 3-18A SHOULD BE RUN FOR ALL IIS VALUES.
11. "B REGISTER SET FOR THIS IIS" MEANS THAT EITHER A MULTISITE MESSAGE OR A MULTISITE DIRECTED MESSAGE IS WAITING FOR THIS IIS
12. SET THIS IIS IN REPLY IF THE UM FIELD IS NOT PRE-EMPTED BY AN INTERROGATOR COMMAND

FIGURE 3-18A: ENHANCED COMM-B PROTOCOL

© EUROCAE, 2003

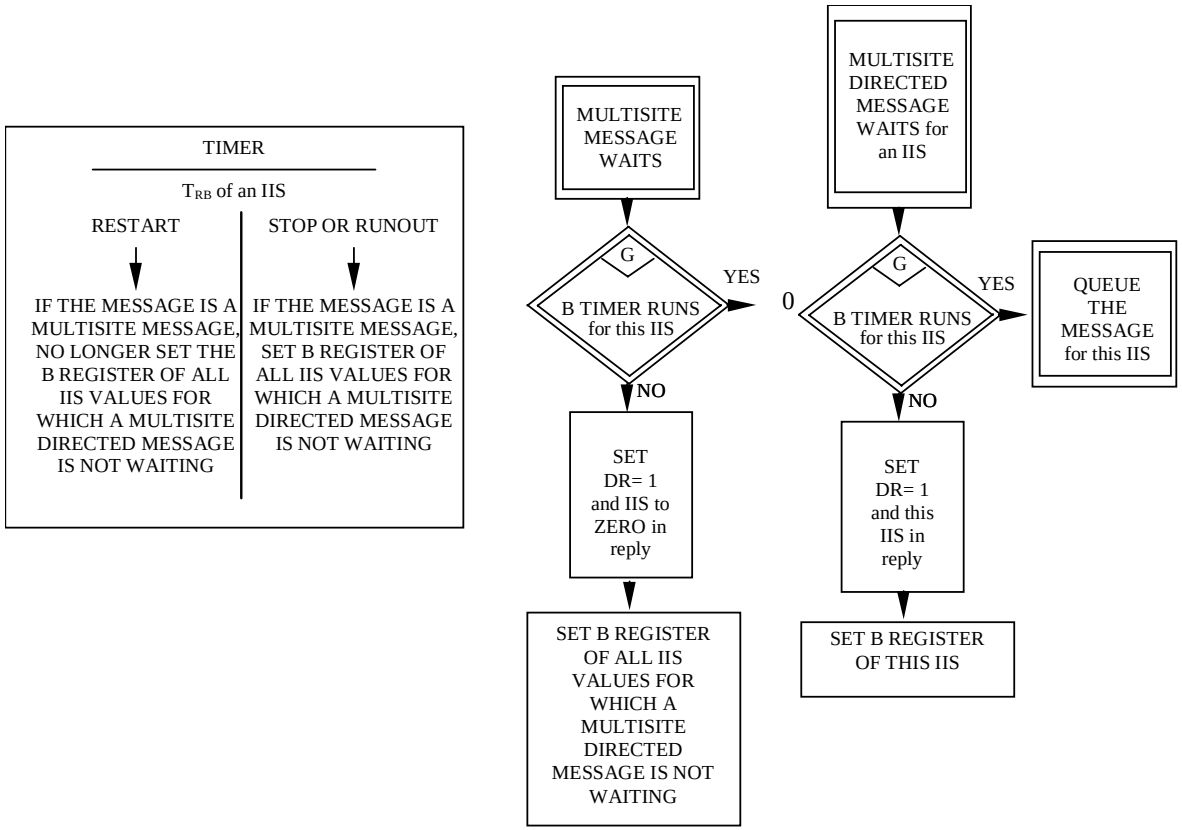

FIGURE 3-18A (CONT'D): ENHANCED COMM-B PROTOVOL

© EUROCAE, 2003

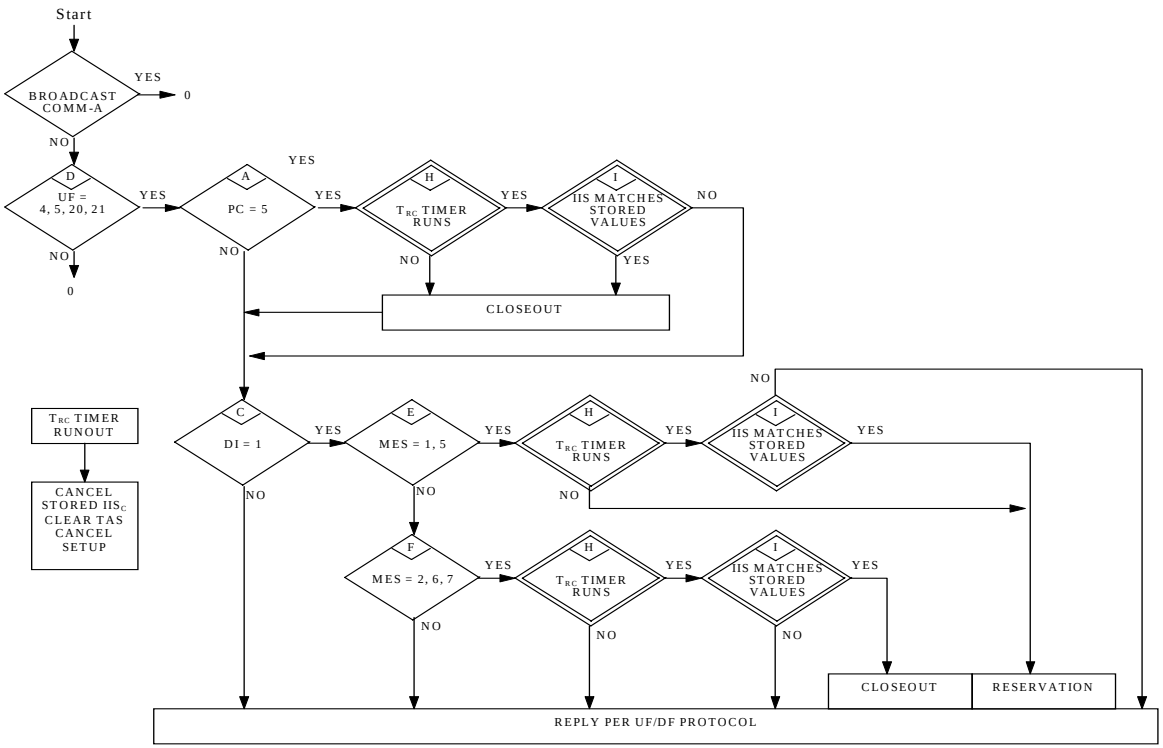

NOTE 1: *"RESERVATION" indicates that the IIS is stored and the timer is started*

NOTE 2: *"CLOSEOUT" indicates that the stored IIS is cancelled, the timer is stopped, TAS is cleared and the SETUP is cancelled*

NOTE 3: *"0" indicates termination of the process.*

NOTE 4: *Double borders indicate transponder states*

FIGURE 3-19: COMM-C RESERVATION AND CLOSE OUT

© EUROCAE, 2003

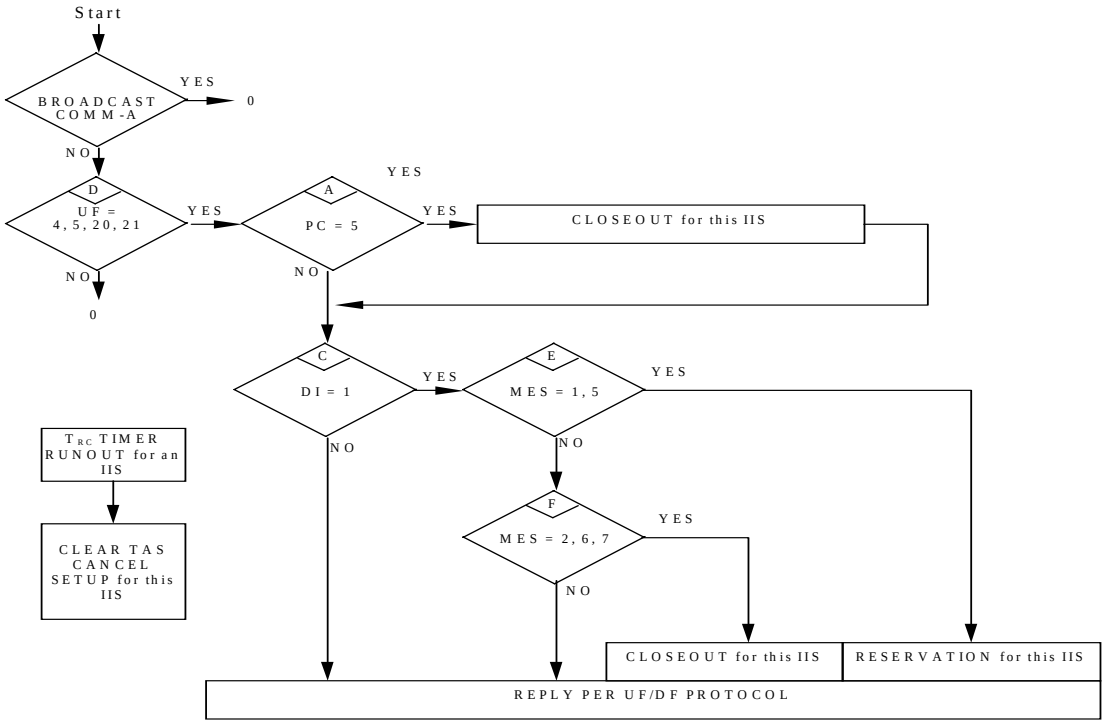

NOTE 1: *"RESERVATION" indicates that the timer is started for this IIS*

NOTE 2: *"CLOSEOUT" indicates that the timer is stopped and reset, TAS is cleared and the SETUP is cancelled for this IIS.*

NOTE 3: *"0" indicates termination of the process.*

NOTE 4: *If the timer for a particular IIS is running and a reservation is received for this IIS, this reservation will be granted. Since the timer is running, a former reservation has probably been received and will be cleared by this new reservation.*

© EUROCAE, 2003

FIGURE 3-19A: ENHANCED COMM-C RESERVATION AND CLOSEOUT

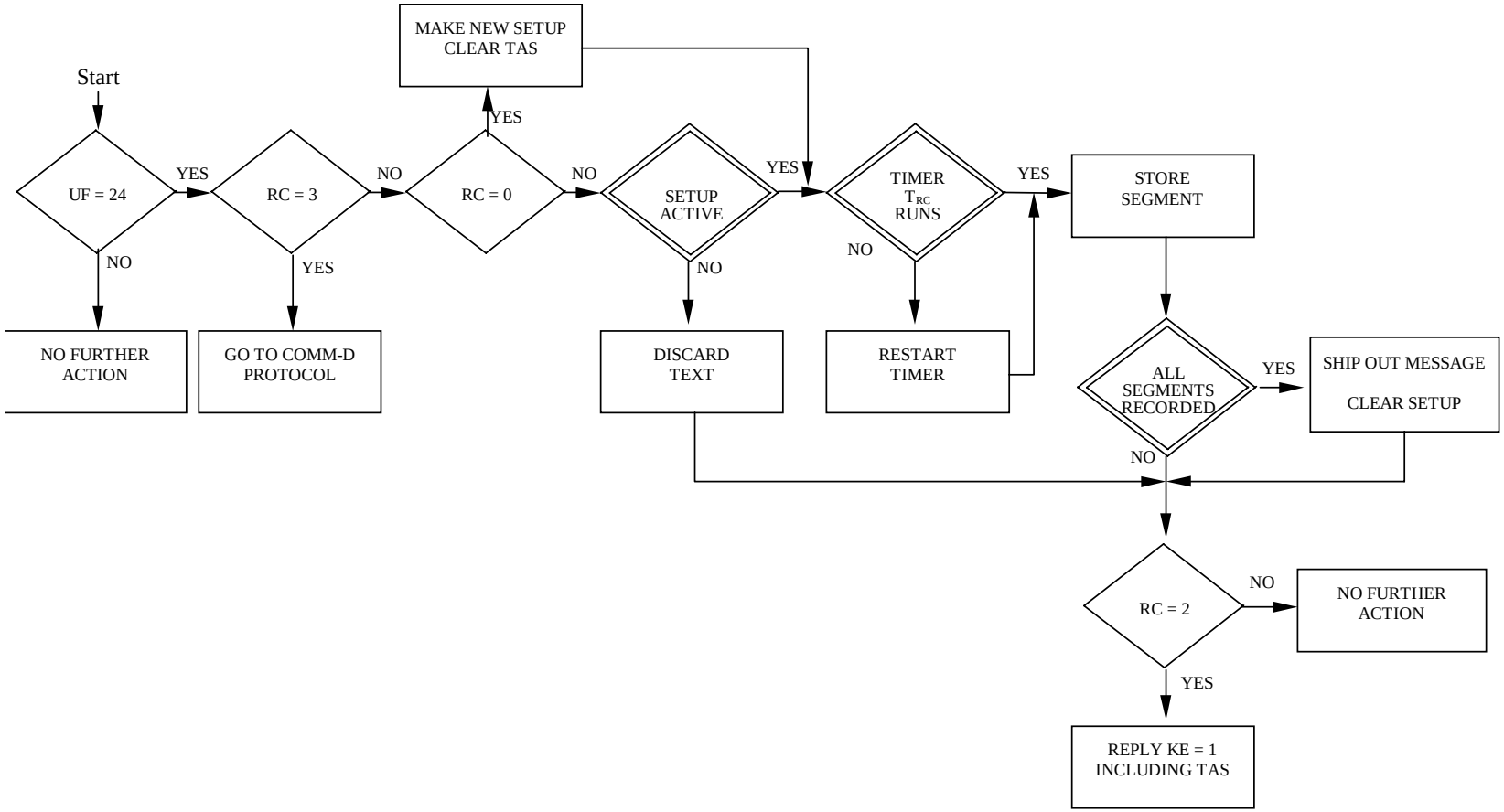

NOTE 1: *Double borders indicate transpondeur states*

NOTE 2: *Clear setup does not clear tas. Tas is cleared by the receipt of a closeout message*

FIGURE 3-20 : COMM-C MESSAGE HANDLING

© EUROCAE, 2003

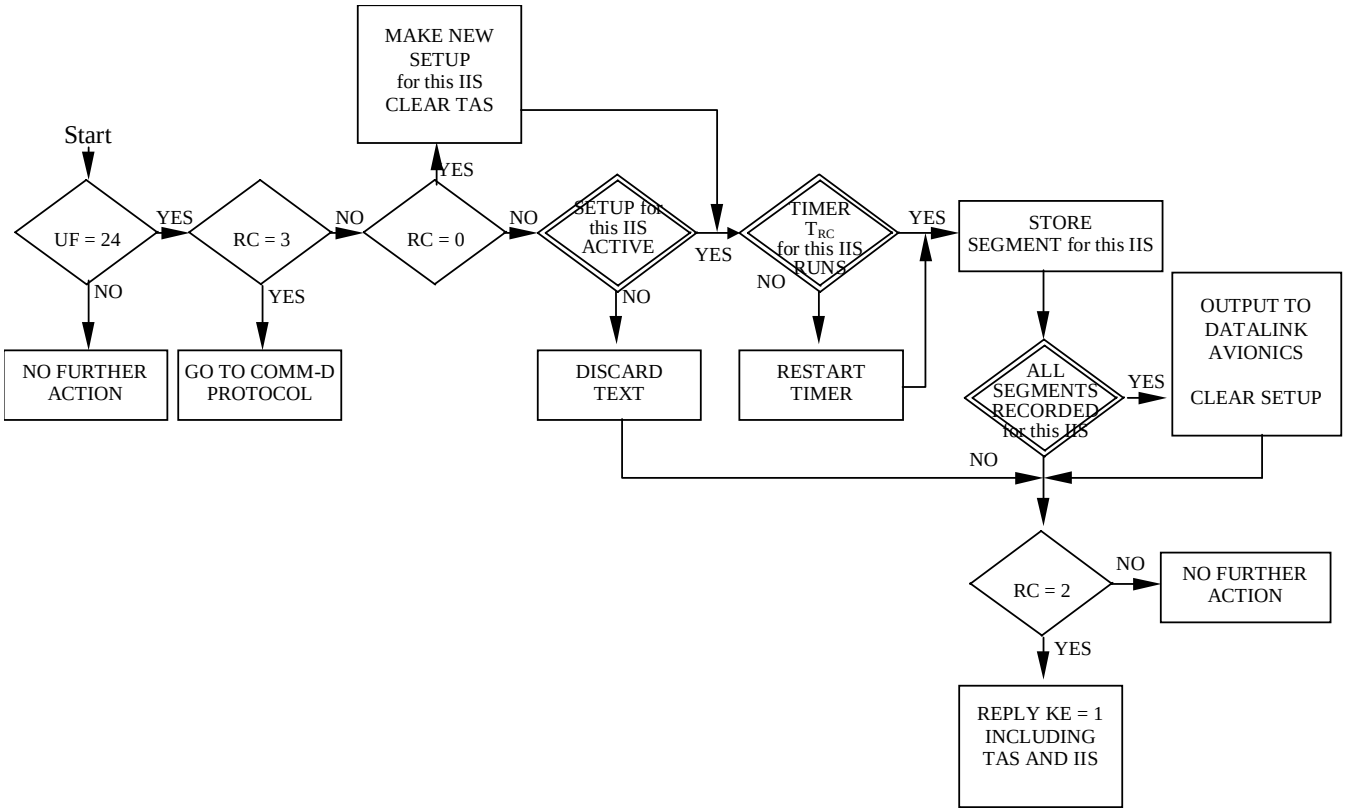

NOTE 1: *Double borders indicate transponder states*

NOTE 2: *Clear setup for an IIS does not clear TAS. TAS cleared by the receipt of a closeout message*

FIGURE 3-20A: ENHANCED COMM-C MESSAGE HANDLING

© EUROCAE, 2003

Draft change proposal[132] after WG 49 meeting 4

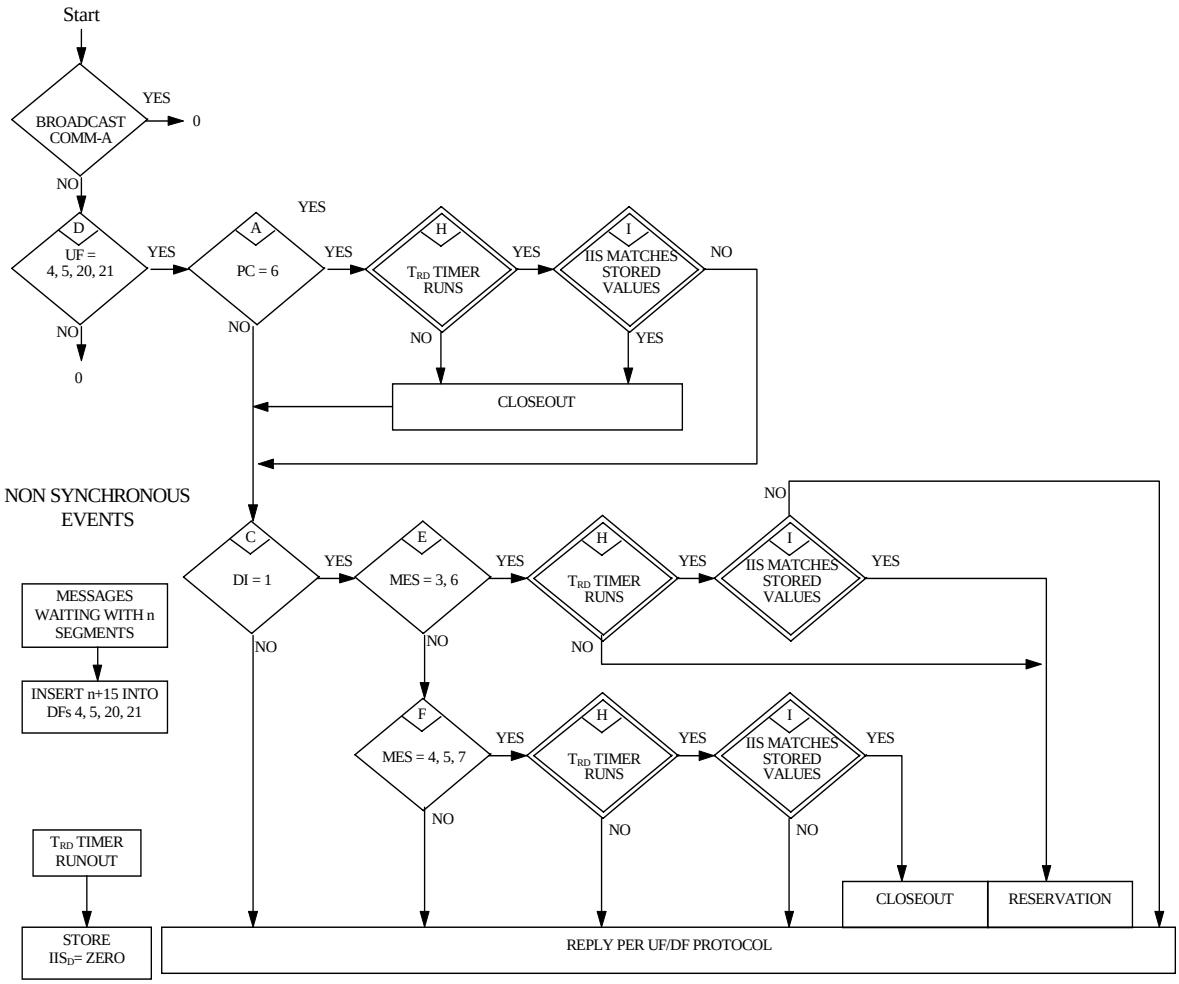

NOTE 1: *"RESERVATION" indicates that the IIS is stored and the timer is started*

NOTE 2: *"Closeout" indicates that the stored IIS is cancelled, the timer is stopped, DR is cleared and the message is cancelled*

NOTE 3: *"0" indicates termination of the process*

NOTE 4: *Double borders indicate transponder states*

NOTE 5: *Additional processing for multisite-directed COMM-D transmissions is defined in 3.21.2.5 b*

NOTE 6: *CLOSEOUT is only permitted if the D register is set (Figure 3-22)*

NOTE 7: *The D register incdicates if a message readout has been attempted at least once*

NOTE 8: *The D register is reset when the D-timer expires*

FIGURE 3-21: COMM-D RESERVATION AND CLOSEOUT

© EUROCAE, 2003

Draft change proposal[133] after WG 49 meeting 4

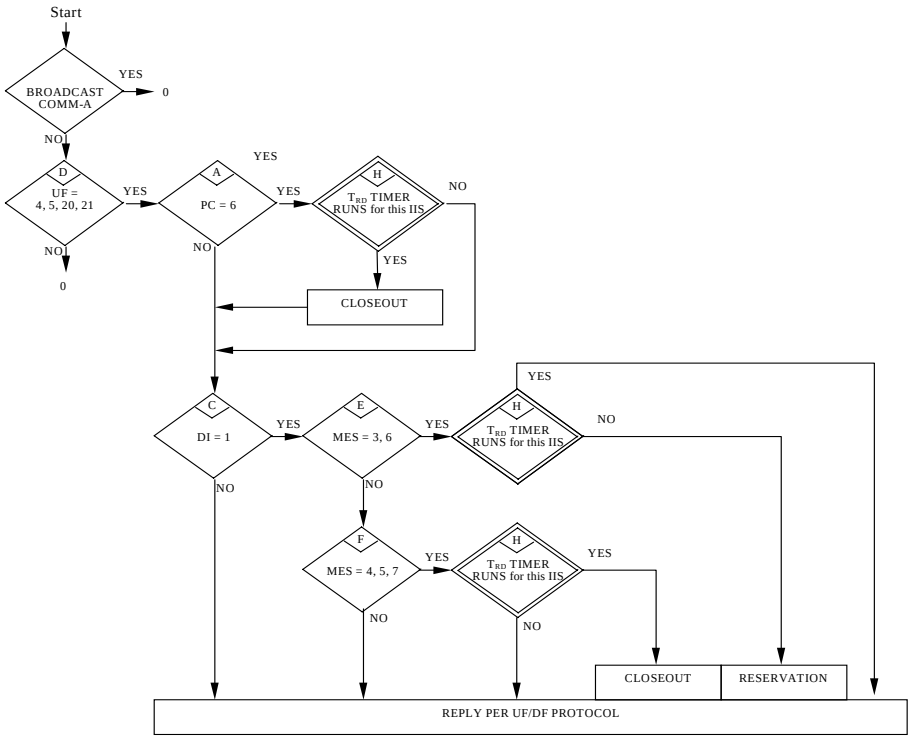

NON SYNCHRONOUS EVENTS
(processes are to be run for each IIS value)

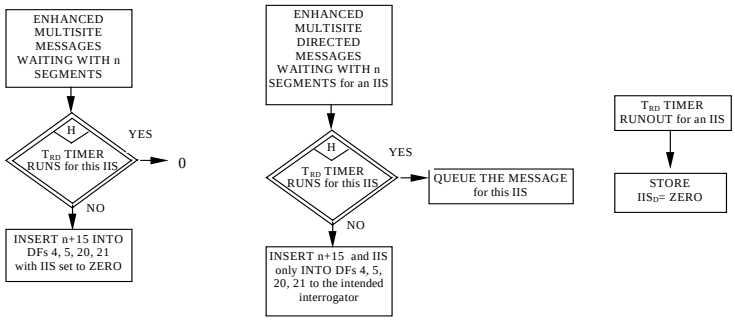

NOTE 1: *"RESERVATION" indicates that the timer is started for this IIS*

NOTE 2: *"Closeout" indicates that the timer is stopped and reset, DR is cleared and the message is cancelled for this IIS*

NOTE 3: *"0" indicates termination of the process*

NOTE 4: *Double borders indicate transponder states*

NOTE 5: *Additional processing for multisite-directed COMM-D transmissions is defined in 3.21.2.5.b*

NOTE 6: *CLOSEOUT is only permitted if the D register is set for this IIS (Figure 3-22A)*

NOTE 7: *The D register indicates if a message readout has been attempted at least once for this IIS*

NOTE 8: *The D register is reset when the D-timer expires for this IIS*

FIGURE 3-21A: ENHANCED COMM-D RESERVATION AND CLOSEOUT

© EUROCAE, 2003

Draft change proposal[134] after WG 49 meeting 4

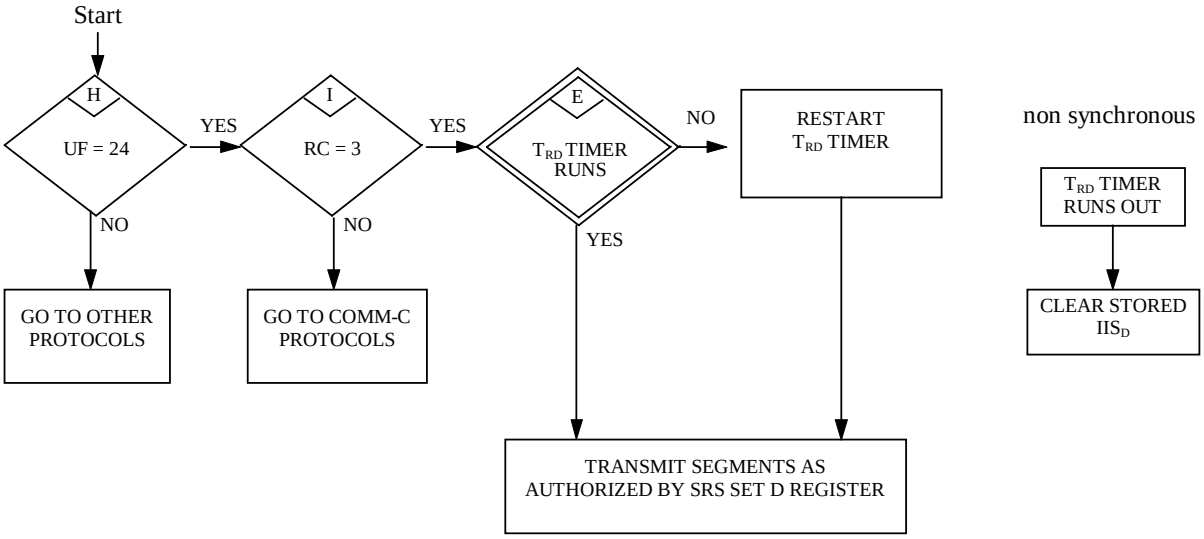

NOTE: *Double borders indicate transponder state*

FIGURE 3-22: COMM-D MESSAGE HANDLING

© EUROCAE, 2003

Draft change proposal[135] after WG 49 meeting 4

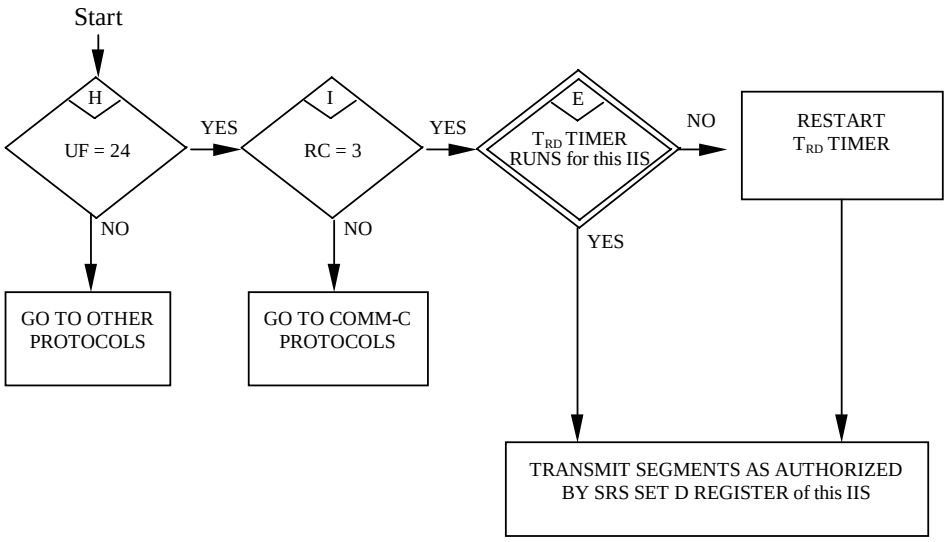

NOTE: *Double borders indicate transponder state*

FIGURE 3-22A: ENHANCED COMM-D MESSAGE HANDLING

© EUROCAE, 2003

Draft change proposal[136] after WG 49 meeting 4

CHAPTER 4

MINIMUM PERFORMANCE SPECIFICATION UNDER ENVIRONMENTAL TEST CONDITIONS

4.1 INTRODUCTION

The environmental test conditions and performance criteria described in this section provide a laboratory means of determining the overall performance characteristics of the equipment under conditions representative of those which may be encountered in actual operation.

Unless otherwise specified in this document or by the approving authority, the test procedures applicable to the determination of equipment performance under environmental test conditions are contained in EUROCAE document ED-14D, "Environmental Conditions and Test Procedures for Airborne Equipment".

Some of the environmental tests contained in this section do not have to be performed unless the manufacturer wishes to qualify the equipment for that particular environmental condition; these tests are identified by the phrase "If Required". If the manufacturer wishes to qualify the equipment to these additional environmental conditions, then the "If Required" tests shall be performed.

NOTE: *Throughout this chapter there are two columns of references. The first column is a reference to the associated requirement and the second column is a reference to the associated test procedure.*

4.2 TEMPERATURE AND ALTITUDE

4.2.1 Low Temperature

(ED-14D, paragraph 4.5.1)

During this test,

a. establish compliance with the following paragraphs of this document:

requirement	test	topic
3.2.2~~3.2.2~~	5.4.1.2~~5.4.1.2~~ a	Sensitivity Variation with Frequency
3.2.4~~3.2.4~~	5.4.1.2~~5.4.1.2~~ b through g	Sensitivity and Dynamic Range
3.3.1~~3.3.1~~	5.4.2.1~~5.4.2.1~~	Reply Transmission Frequency
3.3.3~~3.3.3~~	5.4.2.2~~5.4.2.2~~	RF Peak Power Output
3.4~~3.4~~	5.4.2.5~~5.4.2.5~~	Reply Rate Capability
3.5~~3.5~~	5.4.3.1~~5.4.3.1~~	Mode A/C Replies
3.7~~3.7~~	5.4.3.3~~5.4.3.3~~	Reply Delay and Jitter
3.8~~3.8~~	5.4.4~~5.4.4~~	Side Lobe Suppression
3.9~~3.9~~	5.4.5~~5.4.5~~	Pulse Decoder Characteristics
3.10~~3.10~~	5.4.6~~5.4.6~~	Transponder Desensitisation and Recovery
3.12~~3.12~~	5.4.7~~5.4.7~~	Response to Interference
3.13~~3.13~~	5.4.8~~5.4.8~~	Undesired Replies
3.14~~3.14~~	5.4.9.1~~5.4.9.1~~	Self Test and Monitors
3.14~~3.14~~	5.4.9.2~~5.4.9.2~~	Squitter Monitor
3.15~~3.15~~	5.4.10~~5.4.10~~	Mutual Suppression Capability
3.16~~3.16~~	5.4.11~~5.4.11~~	Diversity Operation
3.17.1~~3.17.1~~ a	5.4.12.1~~5.4.12.1~~	Fixed Direct Data
3.17.1~~3.17.1~~ b	5.4.12.2~~5.4.12.2~~	Variable Direct Data
3.17.3~~3.17.3~~	5.4.12.3~~5.4.12.3~~	Standard Transaction Interfaces
3.17.4~~3.17.4~~	5.4.12.4~~5.4.12.4~~	ELM Service Interfaces
3.17.2~~3.17.2~~ b	5.4.13~~5.4.13~~	Interface Integrity Testing
3.24~~3.24~~	5.4.14~~5.4.14~~	Power Interruption

b. ensure that mechanical devices operate satisfactorily.

© EUROCAE, 2003

4.2.2 High Temperature

(ED-14D, paragraphs 4.5.2, 4.5.3 and 4.5.4)

4.2.2.1 Short-time operating test

During the high, short-time operating temperature and loss of cooling test,

a. establish compliance with the following paragraphs:

requirement	test	topic
3.2.2~~3.2.2~~	5.4.1.2~~5.4.1.2~~ a	Sensitivity Variation with Frequency
3.2.4~~3.2.4~~	5.4.1.2~~5.4.1.2~~ b through g	Sensitivity and Dynamic Range
3.3.1~~3.3.1~~	5.4.2.1~~5.4.2.1~~	Reply Transmission Frequency
3.3.3~~3.3.3~~	5.4.2.2	RF Peak Power Output
3.8~~3.8~~	5.4.4~~5.4.4~~	Side Lobe Suppression
3.9~~3.9~~	5.4.5~~5.4.5~~	Pulse Decoder Characteristics
3.14~~3.14~~	5.4.9.1~~5.4.9.1~~	Self Test and Monitors
3.14~~3.14~~	5.4.9.2~~5.4.9.2~~	Squitter Monitor
3.16~~3.16~~	5.4.11~~5.4.11~~	Diversity Operation
3.17.1~~3.17.1~~ a	5.4.12.1~~5.4.12.1~~	Fixed Direct Data
3.17.1~~3.17.1~~ b	5.4.12.2~~5.4.12.2~~	Variable Direct Data
3.17.3~~3.17.3~~	5.4.12.3~~5.4.12.3~~	Standard Transaction Interfaces
3.17.4~~3.17.4~~	5.4.12.4~~5.4.12.4~~	ELM Service Interfaces
3.17.2~~3.17.2~~ b	5.4.13~~5.4.13~~	Interface Integrity Testing
3.24~~3.24~~	5.4.14~~5.4.14~~	Power Interruption

b. ensure that mechanical devices operate satisfactorily.

4.2.2.2 High operating temperature test

Same as for paragraph 4.2.1.

4.2.3 Altitude

(ED-14D, paragraph 4.6.1)

During this test,

a. establish compliance with the following paragraphs:

requirement	test	topic
3.3.1~~3.3.1~~	5.4.2.1~~5.4.2.1~~	Reply Transmission Frequency
3.3.3~~3.3.3~~	5.4.2.2~~5.4.2.2~~	RF Peak Power Output
3.5.4~~3.5.4~~	5.4.3.1~~5.4.3.1~~	Mode A/C reply pulse
3.6.5~~3.6.5~~	5.4.3.2~~5.4.3.2~~	Mode S Replies
3.14~~3.14~~	5.4.9.1~~5.4.9.1~~	Self Test and Monitors
3.14~~3.14~~	5.4.9.2~~5.4.9.2~~	Squitter Monitor

b. ensure that mechanical devices operate satisfactorily.

4.2.4 Decompression

(If required):

Same as for paragraph 4.2.3

© EUROCAE, 2003

4.2.5 Overpressure Test

(If required)

Same as for paragraph 4.2.3.

4.3 TEMPERATURE VARIATION

(ED-14D, Section 5.0)

During this test,

a. establish compliance with the following paragraphs:

requirement	test	topic
3.2.2~~3.2.2~~	5.4.1.2~~5.4.1.2~~ a	Sensitivity Variation with Frequency
3.2.4~~3.2.4~~	5.4.1.2~~5.4.1.2~~ b through g	Sensitivity and Dynamic Range
3.3.1~~3.3.1~~	5.4.2.1~~5.4.2.1~~	Reply Transmission Frequency
3.13~~3.13~~	5.4.8~~5.4.8~~	Undesired replies
3.14~~3.14~~	5.4.9.1~~5.4.9.1~~	Self test and monitors
3.14~~3.14~~	5.4.9.2~~5.4.9.2~~	Squitter Monitor

b. ensure that mechanical devices operate satisfactorily.

4.4 HUMIDITY

(ED-14D, Section 6.0)

After subjection to this test and the application of primary power for 15 minutes, immediately establish compliance with paragraphs 4.2.2.1 a and b.

4.5 Shock

(ED-14D, Section 7.0)

4.5.1 Operational Shocks

Following the application of the operational shocks,

Same as for paragraphs 4.2.2.1 a and b

4.5.2 Crash Safety Shocks

Following the application of the crash safety shocks, the equipment shall remain in its mounting and no part of the equipment or its mounting shall have become detached and free of the shock test table.

NOTE: *The application of this test may result in damage to the equipment. It may therefore be conducted after the other tests and paragraph, Paragraph 2.8 "Effects of Tests", does not apply.*

4.6 VIBRATION

(ED-14D, Section 8.0)

Same as for paragraph 4.2.1.

4.7 EXPLOSION PROOFNESS

(if required) (ED-14D, Section 9.0)

While the equipment is being subjected to this test, it shall not cause detonation of the explosive mixture within the test chambers under normal and fault conditions.

© EUROCAE, 2003

NOTE: *The application of this test may result in damage to the equipment, it may therefore be conducted after the other tests and paragraph 2.8 does not apply.*

4.8 WATER PROOFNESS

(if required) (ED-14D, Section 10.0)

After subjection to this test, establish compliance with paragraphs 4.2.2.1 a and b.

4.9 FLUIDS SUSCEPTIBILITY

(if required) (ED-14D, Section 11.0)

Subsequent to a 2 hour operational period at ambient temperature, after the 160 hour exposure period, establish compliance with paragraphs 4.2.2.1 a and b.

4.10 SAND AND DUST

(if required) (ED14B,Section 12.0)

After subjection to this test, establish compliance with paragraphs 4.2.2.1 a and b.

4.11 FUNGUS RESISTANCE

(if required) (ED-14D, Section 13.0)

After subjection to this test, establish compliance with paragraphs 4.2.2.1 a and b.

4.12 SALT SPRAY

(if required) (ED-14D, Section 14.0)

After subjection to this test, establish compliance with paragraphs 4.2.2.1 a and b.

4.13 MAGNETIC EFFECT

(ED-14D, Section 15.0)

Determine the magnetic effect of the equipment and establish that it meets the category to which it is declared.

4.14 POWER INPUT

(ED-14D, Section 16.0)

4.14.1 Normal Operating Conditions

When subjected to this test, for the category corresponding to the type of aircraft electrical supply system used, the equipment shall comply with paragraphs 4.2.2.1 a and b.

4.14.2 Abnormal Operating Conditions

When subjected to the Abnormal Operating Conditions of the power supply, (ED-14D, paragraphs 16.5.3 and 16.5.4), the equipment shall comply with paragraphs 4.2.2.1 a and b.

NOTE 1: *Equipment operating on DC power: The gradual reduction to zero of the primary power voltage(s) shall produce no detrimental effects, (see paragraph 2.8).*

NOTE 2: *In respect of ED-14D, paragraphs 16.5.2.3 and 16.5.2.4, (momentary power interruptions), the test may be carried out following the power interruptions.*

© EUROCAE, 2003

Draft change proposal[140] after WG 49 meeting 4

4.15 VOLTAGE SPIKE CONDUCTED TEST

(ED-14D, Section 17.0)

The following paragraphs refer to the relevant test conditions specified in Section 17.0 of ED-14D.

4.15.1 Category A

The equipment shall be subjected to the test conditions specified in ED-14D, paragraph 17.3, and shall comply with paragraphs 4.2.2.1 a and b.

4.15.2 Category B

The equipment shall be subjected to the test conditions specified in ED-14D, paragraph 17.4 and shall comply with paragraph 4.2.2.1 a immediately following the ten second test period of the Intermittent Transient test (ED-14D paragraph 17.4.1) and during the Repetitive Transient test (ED14D paragraph 17.4.2).

4.16 AUDIO FREQUENCY CONDUCTED SUSCEPTIBILITY

(ED-14D, Section 18.0)

Same as for paragraph 4.2.1.

4.17 INDUCED SIGNAL SUSCEPTIBILITY

(ED-14D, Section 19.0)

Same as for paragraph 4.2.1.

4.18 RADIO FREQUENCY SUSCEPTIBILITY

(Radiated and Conducted) (ED-14D, Section 20)

Same as for paragraph 4.2.1.

4.19 EMISSION OF RADIO FREQUENCY ENERGY

(ED-14D, Section 21.0)

Establish compliance with the category to which the equipment is declared.

4.20 LIGHTNING INDUCED TRANSIENT SUSCEPTIBILITY

(ED-14D, Section 22)

Following the application of these tests,

a. ensure compliance with the following paragraphs:

requirement	test	topic
3.2.2~~3.2.2~~	5.4.1.2~~5.4.1.2~~ a	Sensitivity Variation with Frequency
3.2.4~~3.2.4~~	5.4.1.2~~5.4.1.2~~ b through g	Sensitivity and Dynamic Range
3.3.1~~3.3.1~~	5.4.2.1~~5.4.2.1~~	Reply Transmission Frequency
3.3.3~~3.3.3~~	5.4.2.2~~5.4.2.2~~	RF Peak Power Output
3.5.4~~3.5.4~~	5.4.3.1~~5.4.3.1~~	Mode A/C Replies
3.6.5~~3.6.5~~	5.4.3.2~~5.4.3.2~~	Mode S Replies
3.8~~3.8~~	5.4.4~~5.4.4~~	Side Lobe Suppression
3.9~~3.9~~	5.4.5~~5.4.5~~	Pulse Decoder Characteristics
3.10~~3.10~~	5.4.6~~5.4.6~~	Transponder Desensitisation and Recovery
3.13~~3.13~~	5.4.8~~5.4.8~~	Undesired Replies
3.14~~3.14~~	5.4.9.1~~5.4.9.1~~	Self Test and Monitor
3.14~~3.14~~	5.4.9.2~~5.4.9.2~~	Squitter Monitor
3.15~~3.15~~	5.4.10~~5.4.10~~	Mutual suppression capability
3.16~~3.16~~	5.4.11~~5.4.11~~	Diversity Operation

© EUROCAE, 2003

3.17.1~~3.17.1~~ a	5.4.12.1~~5.4.12.1~~	Fixed Direct Data
3.17.1~~3.17.1~~ b	5.4.12.2~~5.4.12.2~~	Variable Direct Data
3.17.3~~3.17.3~~	5.4.12.3~~5.4.12.3~~	Standard Transaction Interfaces
3.17.2~~3.17.2~~ b	5.4.13~~5.4.13~~	Interface Integrity Testing
3.24~~3.24~~	5.4.14~~5.4.14~~	Power Interruption

b. ensure that mechanical devices operate satisfactorily.

© EUROCAE, 2003

4.21 LIGHTNING DIRECT EFFECTS

(ED-14D, Section 23)

Not applicable.

4.22 ICING

(ED-14D, Section 24)

Not applicable.

4.23 ELECTROSTATIC DISCHARGE (ESD)

(ED-14D, Section 25)

Following the apllication of these tests establish compliance with the paragraphs mentioned in paragraph 4.2.1 a.

© EUROCAE, 2003

Draft change proposal[143] after WG 49 meeting 4

CHAPTER 5

TEST PROCEDURES

5.1 GENERAL

5.1.1 Power Input Voltage

Unless otherwise specified, all tests shall be conducted with the power input voltage adjusted to design voltage ±2%. The input voltage shall be measured at the equipment input terminals.

5.1.2 Power Input Frequency

a. In the case of equipment designed for operation from an AC power source of essentially constant frequency (eg, 400 Hz), the input frequency shall be adjusted to design frequency ±2%.

b. In the case of equipment designed for operation from an AC power source of variable frequency, (eg, 300 to 1 000 Hz), unless otherwise specified, tests shall be conducted with the input frequency adjusted to within 5% of a declared frequency within the range for which the equipment is designed.

5.1.3 Adjustment of Equipment

The circuits of the equipment under test shall be properly aligned and adjusted in accordance with the manufacturer's recommended practice prior to application of the specified tests. Unless otherwise specified, adjustments may not be made once the test procedure has started.

5.1.4 Test Instrument Precautions

a. Precautions shall be taken during conduct of the tests to prevent the introduction of errors resulting from the connexion of test instruments across the input and output impedances of the equipment under test.

b. Throughout this chapter, the accuracy of the test equipment is not addressed in detail, but rather is left to the calibration process prescribed by the agency which certifies the testing facility.

5.1.5 Ambient Conditions

All tests shall be conducted under conditions of ambient room temperature, pressure and humidity, as defined in ED-14D, paragraph 3.4.

5.1.6 Connected Loads

Unless otherwise specified, all tests shall be performed with the equipment connected to loads having the impedance values for which it is designed.

5.1.7 Recording of Test Results

When test results are being recorded for incorporation in the type test report, it is not sufficient to note merely that the specified performance was achieved. Except where tests are obviously GO/NO GO in character (eg the determination of whether or not mechanical devices function correctly) the actual numerical values obtained for each of the parameters tested shall be recorded to enable verification of the statement of compliance with the relevant performance specifications of Chapter 3.

© EUROCAE, 2003

5.1.8 Test Procedures

a. The following test procedures are considered to be a satisfactory means of establishing compliance with the performance specifications of Chapters 2 and 3.

b. Alternative procedures which provide equivalent information may be used. In such cases, the procedures described in this chapter shall be used as one criterion in evaluating the acceptability of the alternative procedures.

5.2 STANDARD INTERROGATION TEST SIGNALS

Unless otherwise specified, all test interrogation signals shall be as defined below. The signal measurement convention shall be as specified in paragraph 1.5.4.

5.2.1 General Characteristics

a. Radio Frequency

The carrier frequency of the signal generator for Mode A/C and Mode A/C/S All-Call interrogation shall be 1 030 ±0.1 MHz. Mode S interrogation signals shall have a carrier frequency of 1 030 ±0.01 MHz.

b. CW Output

The CW output between pulses shall be at least 50 dB below the peak level of the pulse.

c. Pulse Rise and Decay Time

Rise and fall times shall be as specified in paragraphs 1.6.3 and 1.6.4.

NOTE: *Unless otherwise indicated, interval measurements are measured between half voltage points of the respective pulses as detected by a linear detector.*

d. Pulse Top Ripple

The instantaneous amplitude of the pulses shall not fall more than 1 dB below the maximum value between the 90% voltage amplitude points on the leading and trailing edges of the pulse.

e. Signal Level

Unless otherwise noted in the Test Procedure, the signal level shall be -60 dBm, ±3 dB.

f. Interrogation Repetition Rate

Unless otherwise noted in the Test Procedure, interrogation rates shall be 450 ±25 Hz for Mode A/C interrogations and 45 ±5 Hz for All-Call and Mode S interrogation.

g. Mode S Interrogation Address.

Unless otherwise noted in the Test Procedure, the aircraft 24-bit address encoded in a Mode S interrogation shall be :

AA AA AA {HEX},

(i.e. binary 1010 1010 1010 1010 1010 1010).

5.2.2 Mode A/C, Mode A/C/S All-Call and Mode A/C-Only All-Call Interrogations

The nominal characteristics shall be as specified in paragraph 1.6. In addition, in order to prohibit any reply inhibition, the "on-the-ground" report (VS or FS field) shall not indicate the on-the-ground condition but the airborne condition unless otherwise noted in the test procedure.

© EUROCAE, 2003

5.2.3 Mode S Interrogations

The nominal characteristics shall be as specified in paragraph 1.6.

5.2.3.1 Mode S-Only All-Call Interrogation.

Mode S-Only All-Call interrogation is defined as a Mode S interrogation of Uplink Format 11 (UF=11), with the value of PR being 8, the value of IC and CL being 0. The "on-the-ground" report (VS or FS field) in the transponder should indicate the "airborne" condition.

An address of 24 ONEs is used in generation of the AP field.

5.2.3.2 Mode S Surveillance - Altitude Interrogation

Mode S Surveillance Altitude Interrogation is defined as a Mode S interrogation of Uplink Format 4 (UF=4), with the following mission field values:

PC=0

RR=0

DI=0

SD=0

5.2.3.3 Mode S Surveillance - Identity Interrogation

Mode S Surveillance - Identity Interrogation is defined as a Mode S interrogation of Uplink Format 5 (UF=5) with the following mission field values:

PC=0

RR=0

DI=0

SD=0

5.2.3.4 Comm-A - Altitude Interrogation.

Comm-A - Altitude Interrogation is defined as a Mode S interrogation of Uplink Format 20 (UF=20) with the following mission field values:

PC=0

RR=20

DI=0

SD=all ONEs

MA= 'AA AAAA AAAA AAAA' {HEX}

5.3 TRANSPONDER TEST SET

The test procedures in this chapter call for one or more Transponder Test Sets, at least one of which must have all of the following capabilities:

a. A means of varying:

(1) the RF frequency by 60 MHz from the centre frequency,

(2) the amplitude of the interrogating signal level from -21 to -85 dBm,

(3) the amplitude of either P2, P3 or P4 with respect to P1,

(4) the interval spacings between the following pairs of pulses, P1-P2, P1-P3 and P3-P4.

© EUROCAE, 2003

b. A means of independently varying the durations of P1, P2, P3 and P4.

c. A means of counting the number of correct replies transmitted in response to valid interrogations.

d. A means of selecting:

(1) Mode A, Mode C, Mode A/C/S All-Call, Mode A/C-Only All-Call or Mode S interrogation formats,

(2) the data which will modulate the P6 pulse.

e. A means of providing carrier phase modulation of the P6 pulse.

f. A means of displaying the downlink reply bit pattern generated by the unit under test in response to a Mode S or All-Call interrogation.

g. A means of adding a train of:

(1) single 0.8 ± 0.1 µs wide pulses or 0.8 ± 0.1 µs pulse pairs spaced 2.0 ± 0.15 µs apart, with level adjustable from 12 dB below P1 to equal with P1 at a carrier frequency of 1 030.0 ±0.2 MHz, incoherent with the Mode S signal frequency, and with the following characteristics:

- Repetition frequencies variable up to 10 000 Hz ;
- Positionable anywhere from the first pulse coincident with P1 to the second pulse coincident with the end of P6.

(2) single 6.4 ±0.5 µs pulses or 3.5 ±0.5 µs pulse pairs spaced either 12 ±0.5 µs or 30 ±0.5 µs apart. The level shall be set at -30 dBm at a carrier frequency variable from 962 to 1 213 MHz. The repetition rate on the pulse pairs shall be variable up to 3 600 Hz and that of the single pulses variable up to 2 000 Hz.

h. A means of synchronising interrogation sequences repetitions with a similar test set.

i. A means of rapidly changing between two interrogation rates.

j. A means of moving the sync phase reversal position in P6 over a ±200 nanosecond range from assigned position.

k. A means of encoding Mode S interrogations with proper parity check sequence.

l. A means of decoding Mode S replies using proper parity check sequence.

m. A means of interlacing Mode A/C and Mode S interrogations.

n. A means of generating Mode A/C and Mode S interrogation bursts at rates which test compliance with paragraph 3.4.

o. A means of displaying the output of the detected video of the replies from the unit under test.

p. A means of measuring the transmission frequency of the transponder.

q. A means of loading test patterns into one or more of the transponder GICB registers 05 to FF {HEX} via the data link interface

r. A means of inputting avionics data to the transponder on one or more channels.

e.g. A Transponder control unit and/or a generator of control words, altitude, ground speed, etc.

s. A means for analysing the statistic properties of squitters.

© EUROCAE, 2003

5.4 TEST PROCEDURES RELATED TO RECEIVER AND TRANSMITTER

The tests in paragraphs 5.4.1 through to 5.4.14~~5.4.14~~ verify transponder performance as a receiver and transmitter of signals. The tests in 5.5 test the transponder processing functions.

NOTE 1: *Means are required to provide the control functions specified in paragraph 2.5 .*

NOTE 2: *The nature of the processing tests is such that some means of automatically controlling, sequencing and evaluating of tests is necessary.*

5.4.1 Receiver Characteristics

(Paragraph 3.2)

5.4.1.1 Test Equipment

Transponder Test Set

5.4.1.2 Test Procedure

Connect the equipment as shown in Figure 5-1.

Follow steps 1 through 7, below:

a. STEP 1 - Sensitivity Variation with Frequency (Paragraph 3.2.2)

Interrogate the transponder with a Mode A interrogation.

Vary the RF signal frequency over the range 1 029.8 to 1 030.2 MHz.

Record the minimum and maximum RF signal levels required to produce 90% transponder reply efficiency.

b. STEP 2 - Sensitivity (Paragraph 3.2.4 a and e)

Interrogate the transponder with a Mode A interrogation.

Record the minimum RF signal level required to produce 90% transponder reply efficiency.

Repeat the procedure using :

- a Mode C interrogation,
- a Mode A/Mode S All-Call interrogation and
- a Mode C/Mode S All-Call interrogation.

This determines the MTL for these interrogations.

c. STEP 3 - Mode A/C and Mode A/C/S All-Call Dynamic Range (Paragraph 3.2.4 f)

Interrogate the transponder with a Mode A interrogation.

Vary the RF level in 5 approximately equal steps between MTL and -21 dBm.

Record the reply ratio at each step.

Repeat the procedure using :

- a Mode A/Mode S All-Call interrogation and
- a Mode C/Mode S All-Call interrogation.

© EUROCAE, 2003

d. STEP 4 - Bandwidth (Paragraph 3.2.3)

Interrogate the transponder with a Mode A interrogation.

Adjust the RF signal level to 60 dB above MTL.

Record the frequencies above and below 1 030 MHz at which 90% transponder reply efficiency is obtained.

NOTE: *Care must be taken to avoid high signal levels at or near the centre frequency.*

e. STEP 5 - Mode A/C Mode A/C/S All-Call and Mode S-Only All-Call Low-Level Reply Ratio (Paragraph 3.2.4 d)

With a RF signal level of -81 dBm, interrogate the transponder with:

- a Mode A interrogation,
- a Mode A/Mode S All-Call interrogation,
- a Mode C/Mode S All-Call interrogation, and
- a Mode S-Only All-Call interrogation with PR = 0.

In each case record the reply ratio.

f. STEP 6 - Mode S Sensitivity (Paragraph 3.2.4 b)

Interrogate the transponder with a Mode-S Only All-Call interrogation with PR=0.

Record the minimum RF level to produce 90% reply efficiency. This is the MTL for this interrogation.

g. STEP 7 - Mode S Dynamic Range (Paragraph 3.2.4 c)

Interrogate the transponder with a Mode-S Only All-Call interrogation with PR=0.

Record the reply ratio at RF levels of MTL+3dB, -50 and -21 dBm.

5.4.2 Transmitter Characteristics

(Paragraph 3.3)

5.4.2.1 Reply Transmission Frequency

(Paragraph 3.3.1)

5.4.2.1.1 Test Equipment

a. Transponder Test Set

b. Stub Tuner.

c. Variable Air Line (Line Stretcher)

d. Slotted Line.

5.4.2.1.2 Test Procedure

Connect the equipment as shown in Figure 5-2.

Adjust the stub to establish a 1.5:1 VSWR at the antenna end of the coaxial line specified by the manufacturer.

- If the transponder requires a minimum length of a specified cable type, attenuation equal to the loss of the minimum amount of cable may be placed between the 1.5:1 VSWR point and the transponder antenna jack.
- Alternatively, a length of cable equal to the specified minimum length and cable type may be used in lieu of the attenuator.

© EUROCAE, 2003

Set the transponder for a 14 pulse reply (Mode-A code 7777).

Interrogate the transponder with a Mode A interrogation and adjust the line stretcher for maximum transmitter frequency shift above or below 1 090 MHz.

Record the frequency shift in each case.

Repeat the above procedure with a Mode A/Mode S All-Call.

5.4.2.2 RF Peak Power Output

(Paragraph 3.3.3)

5.4.2.2.1 Test Equipment

a. Transponder Test Set

b. Wide Band Dual Channel Oscilloscope.

5.4.2.2.2 Test Procedure

Connect the equipment as shown in Figure 5-3.

a. STEP 1 - Mode A/C Power Output (Paragraph 3.3.3)

Set the transponder for a 14 pulse reply (Mode-A code 7777).

Interrogate the transponder with a Mode A interrogation and record the peak power level of the single reply pulse having the least RF power level.

While varying the interrogation rate from 100 interrogations per second to the maximum interrogation rate specified for the transponder, record the variation in peak power level of the single reply pulse having the least RF power level.

Repeat the procedure, recording the level and variation in peak power level of the single reply pulse having the highest RF power level.

b. STEP 2 - Mode S Power Output (Paragraph 3.3.3)

Repeat STEP 1 with a Mode A/Mode S All-Call interrogation at standard rate only.

For transponders with long reply capability, repeat STEP 1 with a Mode S interrogation, using any format and coding for which a long reply is required.

5.4.2.3 Transmitter Spectrum

(Paragraph 3.3.2~~3.3.2~~)

5.4.2.3.1 Test Equipment

a. Transponder Test Set.

b. Spectrum Analyser.

c. Directional Coupler.

5.4.2.3.2 Test Procedure

Connect the equipment as shown in Figure 5-4.

a. STEP 1 - Mode A/C

Set the transponder for a 14 pulse reply (Mode-A code 7777).

Interrogate on Mode A at 500 interrogations per second, and verify that the reply efficiency exceeds 90%

Measure and record the spectrum of RF emission at the antenna terminal of the transponder over the range 150 kHz to 10 GHz.

© EUROCAE, 2003

b. STEP 2 - Mode S

Repeat Step 1 with Mode S "All-Call interrogation".

Record the maximum response in each frequency band as a ratio expressed in dB relative to the centre band peak level.

5.4.2.4 Residual Power Output

(Paragraph 3.3.4)

5.4.2.4.1 Test Equipment

a. Transponder Test Set.

b. Spectrum Analyser.

c. Directional Coupler.

5.4.2.4.2 Test Procedure

Connect the equipment as shown in Figure 5-4.

Either disable the transponder transmission modulation or inhibit squitter transmissions.

Do not interrogate the transponder.

Record the maximum power output, in the range of 1 090 ±3 MHz, with the transponder in the inactive state.

5.4.2.5 Reply Rate Capability

(Paragraph 3.4)

5.4.2.5.1 Test Equipment

Transponder Test Set

5.4.2.5.2 Test Procedure

a. STEP 1 - Continuous Reply Rate Capability (Mode A/C) (Paragraph 3.4.1)

Set the transponder for a 15-pulse reply (Mode A with SPI) and set the reply rate limit control to maximum.

Interrogate the transponder on Mode A at 500 interrogations per second.

Gradually increase the interrogation rate while observing the reply count over 1-second intervals.

Verify that the maximum reply rate is at least 1 200 replies per second for Class 1 transponders, and 1 000 replies per second for Class 2 transponders.

b. STEP 2 - Continuous Reply Rate Capability (Mode S) (Paragraph 3.4.2)

(1) If the transponder has only short reply capability

Set the transponder for a 15-pulse reply (Mode A with SPI).

Interrogate the transponder at a constant rate of 500 Mode A interrogations per second, plus 50 Mode S interrogations (for short replies) per second.

For at least 15 minutes verify that the transponder replies at the specified rates.

(2) If the transponder has long reply capability but no Downlink ELM capability

Perform the test listed in (1) using 16 of the 50 Mode S interrogations requiring long replies.

© EUROCAE, 2003

(3) If the transponder has Level 4 capability

Perform the test listed in (1) using 16 of the 50 Mode S interrogations requiring long replies. Additionally generate Downlink ELMs at the rate specified in Step 6 below.

(4) If the transponder has Level 5 capability

Perform the test listed in (1) using 24 of the 50 Mode S interrogations requiring long replies. Additionally generate Downlink ELMs at the rate specified in Step 6 below.

c. STEP 3 - 100 Milliseconds Peak Reply Rate Capability (Mode S) (Paragraph 3.4.2)

Set the transponder for a 15-pulse reply (Mode A with SPI).

Interrogate the transponder with periodic bursts of Mode A and Mode S interrogations as follows:

(1) 120 Mode A interrogations, plus 18 Mode S interrogations (with short replies), each type of interrogation approximately uniformly spaced within a single 0.1-second interval, followed by

(2) a 0.9-second interval with no interrogations.

Verify that the transponder replies at the specified rate.

If the transponder has long reply capability, repeat the test using 6 of the 18 Mode S interrogations requiring long replies.

d. STEP 4 - 25 Millisecond Peak Reply Rate Capability (Mode S) (Paragraph 3.4.2)

Set the transponder for a 15-pulse reply (Mode A with SPI).

Interrogate the transponder with periodic bursts of Mode A and Mode S interrogations as follows :

(1) 30 Mode A interrogations plus 8 Mode S interrogations (requiring short replies), each type of interrogation burst approximately uniformly spaced within a single 25-millisecond interval, followed by

(2) a 975-millisecond interval without interrogations.

In each case, verify that the transponder replies at the specified rate.

If the transponder has long reply capability, repeat the test using 4 of the 8 Mode S interrogations requiring long replies.

e. STEP 5 - 1.6 Milliseconds Peak Reply Rate Capability (Mode S) (Paragraph 3.4.2)

Set the transponder for a 15-pulse reply (Mode A with SPI).

Interrogate the transponder with two Mode A interrogations plus four Mode S interrogations (with short replies), each type of interrogation approximately uniformly spaced within a single 1.6-millisecond interval, followed by a 998.4-millisecond interval with no interrogation.

Verify that the transponder replies at the specified rate.

If the transponder has long reply capability, repeat the test for two additional Mode S interrogations with long replies.

f. STEP 6 - Mode S Peak Reply Rate (Paragraph 3.4.3)

NOTE: *This test need not to be repeated if it has already been performed as part of Step 2*

Obtain the maximum number of segments (n) the transponder is declared to be capable of delivering.

Calculate the additional number of segments (a) that the transponder is required to handle in a 25-millisecond interval each second as follows:

© EUROCAE, 2003

a = n/4 (Rounded up)

Load the transponder with a Downlink ELM with (n) segments.

At Time = 0:

Interrogate the transponder to extract (n) segments (i.e. the complete Downlink ELM).

At Time = 24 milliseconds:

Interrogate to extract (a) segments again (any segments of the downlink ELM can be chosen), then closeout the Downlink ELM

Verify that all the segments were extracted correctly.

Repeat the test once per second for 1 minute and verify that all the extractions were successful.

5.4.2.6 Reply Rate Limiting

(Paragraph 3.11)

5.4.2.6.1 Test Equipment

a. 2 Transponder Test Sets.

b. Wide Band Dual Channel Oscilloscope.

5.4.2.6.2 Test Procedure

Connect the equipment as shown in Figures 5-5 and 5-6.

a. STEP 1 - Determination of Mode A/C Reply Rate Limit

With the Mode A code set to 0000, interrogate the transponder on Mode A at a rate greater than 2 000 interrogations per second.

Record the reply rate at the maximum and minimum settings of the reply rate limit control.

Set the reply rate limit control to 1 200 replies/sec or the maximum rate below 1 200 replies/sec for Class 2 transponders.

b. STEP 2 - Mode S Reply Rate limiting (Paragraph 3.11)

NOTE: *This test only needs to be performed if a reply rate limiting device is provided.*

Interrogate the transponder with standard UF=4 interrogation requiring a long reply at a rate equal to 1.5-times the Mode S reply rate limit.

Record the squitter reply rate.

For a transponder equipped with the optional long air-air formats, interrogate the transponder as above and with interrogations requiring a DF=16 reply at a rate of 10 interrogations per second and record the DF=16 reply rate.

c. STEP 3 - Sensitivity Reduction

Set the transponder Mode C code to 0000 and the Mode A code to any value other than 0000.

Interrogate the transponder with :

(1) Mode C interrogations at MTL+20dB at a continuous rate of 1 200 interrogations/sec, and

(2) unsynchronised Mode A interrogations at MTL+3dB, at a continuous rate of 600 interrogations/sec

Verify that the transponder replies to at least 90% of the Mode C interrogations at the signal level of MTL+20dB, and that it does not reply to more than 10% of the Mode A interrogations.

© EUROCAE, 2003

Draft change proposal[153] after WG 49 meeting 4

5.4.3 Reply Characteristics

5.4.3.1 Mode A/C Replies

(Paragraph 3.5~~3.5~~)

5.4.3.1.1 Test Equipment

a. Transponder Test Set.

b. Wide Band Dual Channel Oscilloscope.

5.4.3.1.2 Test Procedures

Connect the equipment as shown in Figure 5-3.

a. STEP 1 - Mode A/C Reply Pulse Spacing (Paragraphs 3.5.1, 3.5.2~~3.5.2~~, 3.5.5)

Set a transponder for a 14-pulse reply (Mode A code 7777).

Interrogate the transponder on Mode A and display the reply pulses on the wide band oscilloscope.

Record the spacing of each reply pulse with respect to the first framing pulse and the spacing between information pulses.

b. STEP 2 - Mode A/C Reply Pulse Shape (Paragraph 3.5.4)

Set the transponder for a 15-pulse reply (Mode A with SPI).

Interrogate the transponder on Mode A.

Record the duration of each reply pulse.

Record the rise and decay times of each pulse.

Record the pulse amplitude variations of each pulse with respect to all other pulses in the reply train.

CAUTION: *If the detector is not known to be linear, checks should be made to determine what amplitude points on the detected pulse correspond to the 10% and 90% amplitude points of the RF pulses. In addition, checks should be made to determine the rise time of the detector.*

c. STEP 3 - SPI Pulse (Paragraph 3.5.3 and 3.5.5)

Interrogate with Mode A interrogations.

Activate the SPI pulse control.

Record the position of the SPI pulse with respect to the last framing pulse and the time the pulse remains in the reply train.

d. STEP 4 - SPI Pulse with Mode C Interrogations (Paragraph 3.5.3)

Interrogate with Mode C interrogations.

Activate the SPI pulse control and verify that the SPI pulse is not transmitted.

5.4.3.2 Mode S Replies, Acquisition and Extended Squitter Transmissions

(Paragraph 3.6)

5.4.3.2.1 Test Equipment

a. Transponder Test Set

b. Wide Band Dual Channel Oscilloscope.

© EUROCAE, 2003

5.4.3.2.2 Test Procedure (Mode S Replies)

Connect the equipment as shown in Figure 5-3.

Interrogate the transponder with a Mode A/Mode S All-Call.

Display the Mode S reply on the oscilloscope.

a. STEP 1 - Mode S Preamble (Paragraph 3.6.1)

Record the pulse duration of the first four reply pulses.

Record the pulse spacing between the leading edge of the first and each of the second, third and fourth pulses.

b. STEP 2 - Mode S Reply Data Pulses (Paragraph 3.6.2)

NOTE: *For Steps 2 through 6, examine pulses at the beginning, middle and end of the replies.*

Record the duration for both short and long reply pulses throughout the Mode S reply.

Record the pulse spacing of the fifth reply pulse with reference to the first reply pulse.

NOTE: *This pulse spacing will be either 8.0 µs or 8.5 µs depending on the requested reply format.*

c. STEP 3 - Mode S Reply Amplitude Variation (Paragraph 3.6.4 b.)

Record the maximum power difference between pulses in the Mode S reply.

d. STEP 4 - Mode S Reply Pulse Shape (Paragraph 3.6.4~~3.6.4~~ a.)

Record the rise and decay time of the reply pulses.

CAUTION: *If the detector is not known to be linear, checks should be made to determine what amplitude points on the detected pulse correspond to the 10% and 90% amplitude points of the RF pulses. In addition, checks should be made to determine the rise and decay time of the detector.*

e. STEP 5 - Mode S Reply Pulse Spacing Tolerance (Paragraph 3.6.5)

Measure the deviation of the leading edges of reply pulses from their assigned position and record the maximum values.

f. STEP 6 - Long Replies

Repeat STEPS 1 to 5, using an interrogation which requires a long reply.

g. STEP 7 - Squitter Generation (Paragraph 3.20.2.6)

Record the acquisition squitter transmission and verify its format.

Monitor the acquisition squitter transmission with the transponder in the inactive state. Verify that squitter is emitted at intervals between 0.8 and 1.2 seconds using a time quantisation of no greater than 15 milliseconds. Verify the random nature of the process.

During a acquisition squitter transmission, trigger an interrogation at the transponder test set. Verify that the squitter is not interrupted.

Interrogate the transponder at the rates defined in para 3.4.2 to the maximum capacity of the transponder. Record the acquisition squitter time interval. Verify that the distribution remains random, and is widened by no more than expected.

NOTE: *The widening of the distribution is dependant on the longest transaction cycle i.e. less than 2 milliseconds.*

Suppress the transponder for more than 1.2 seconds. Measure the time between deactivating the suppression and the following acquisition squitter.

© EUROCAE, 2003

NOTE: *Some transponders may not be capable of being suppressed for as long as 1.2 seconds if the mutual suppression pulses are A.C.-coupled. Special arrangements may have to be made to by-pass the suppression input isolating capacitor in order to be able to demonstrate compliance with this test.*

For transponders with extended squitter capability additionally perform the following tests:

(1) If any type of extended squitter is in progress verify that a scheduled acquisition squitter is delayed.

(2) Verify that if an acquisition squitter has begun it is not interrupted by any type of extended squitter.

(3) Verify that if the transponder is reporting surface position extended squitters that no acquisition squitters are transmitted. Conversely verify that acquisition squitters are transmitted as soon as surface position extended squitters cease.

(4) Verify that a means exist of inhibiting the transmission of acquisition squitters while extended squitters are being transmitted.

5.4.3.2.3 Test Procedure (Extended Squitter Generation) (Paragraph 3.21.2.6)

This procedure is only applicable to transponders equipped for extended squitter.

Equipment Required:

Provide a method of loading valid data for the generation of Airborne Position, Surface Position, Aircraft Identification and Type, Airborne Velocity, Intent, Operational Coordination, and Operational Status broadcast messages into the transponder under test

Provide a method of recording and time stamping all messages transmitted by the transponder under test with the time stamping quantisation being 15 milliseconds or less.

Procedure:

Connect the equipment as shown in Figure 5-3a.

Display/record the Mode S squitter information.

a. STEP 1 - Airborne Position Report:

(1) Load GICB register 05 {HEX} with data pattern 50 00 0A AA AA AA AA {HEX} and refresh this data each 1 second. Input a barometric altitude shown in one of the tables below on the appropriate pins of the transponder and refresh this data at the required rate. (Use table with Q bit=0 if alticoder capable of 100 ft resolution only or table with Q bit = 1 if 25 ft resolution). Enable the airborne condition (squat switch discretes).

Record the extended squitter transmission (DF=17) and verify its format.

Verify the transponder has correctly inserted the altitude code in the squitter. Bits 9 to 20 of the 56 bit ME field.

Monitor the extended squitter (DF=17) with the transponder in the inactive state.

Verify that the extended squitter (DF=17) is transmitted at intervals between 0.4 and 0.6 seconds using a time quantisation of no greater than 15 milliseconds. Verify the random nature (see paragraph 3.21.2.6.3) of these squitters.

(2) During the extended squitter transmission, generate an interrogation by the transponder test set. Verify the squitter is not interrupted.

© EUROCAE, 2003

(3) Load GICB register 05 {HEX} with data pattern 50 00 0A AA AA AA AA {HEX} and refresh this data each 1 second. Input a barometric altitude shown in one of the tables below on the appropriate pins of the transponder and refresh this data at the required rate. (Use table with Q bit=0 if alticoder capable of 100 ft resolution only or table with Q bit = 1 if 25 ft resolution). Enable the airborne condition (squat switch discretes).

Q bit = 0 Altitude source reporting in 100 foot increments												
	Code Bits (Altitude Field in BDS 05)											
Bit	9	10	11	12	13	14	15	16	17	18	19	20
Pulse	c1	a1	c2	a2	c4	a4	b1	Q	b2	d2	b4	d4
Input Altitude (ft)	Resulting Bit pattern											
-975	0	0	1	0	0	0	0	0	0	0	0	0
-800	1	0	0	0	0	0	0	0	0	0	0	0
-300	0	0	0	0	1	0	0	0	0	0	1	0
+500	0	0	1	0	0	0	0	0	1	0	0	0
2300	1	0	0	0	0	0	1	0	0	0	0	0
6700	0	0	0	0	1	1	0	0	0	0	0	0
14500	0	0	1	1	0	0	0	0	0	0	0	0
30300	1	1	0	0	0	0	0	0	0	0	0	0
62700	0	0	0	0	1	0	0	0	0	0	0	1
126500	0	0	1	0	0	0	0	0	0	1	0	0

Q bit = 1 Altitude source reporting in 25 foot increments												
	Code Bits (Altitude Field in BDS 05)											
Bit	9	10	11	12	13	14	15	16	17	18	19	20
Value	210	29	28	27	26	25	24	Q	23	22	21	20
Input Altitude (ft)	Resulting Bit pattern											
-975	0	0	0	0	0	0	0	1	0	0	0	1
-950	0	0	0	0	0	0	0	1	0	0	1	0
-900	0	0	0	0	0	0	0	1	0	1	0	0
-800	0	0	0	0	0	0	0	1	1	0	0	0
-600	0	0	0	0	0	0	1	1	0	0	0	0
-200	0	0	0	0	0	1	0	1	0	0	0	0
+600	0	0	0	0	1	0	0	1	0	0	0	0
2200	0	0	0	1	0	0	0	1	0	0	0	0
5400	0	0	1	0	0	0	0	1	0	0	0	0
11800	0	1	0	0	0	0	0	1	0	0	0	0
24600	1	0	0	0	0	0	0	1	0	0	0	0
50175	1	1	1	1	1	1	1	1	1	1	1	1
then	c1	a1	c2	a2	c4	a4	b1	Q	b2	d2	b4	d4
50200	1	0	0	1	0	0	1	0	0	0	1	1
62700	0	0	0	0	1	0	0	0	0	0	0	1
126500	0	0	1	0	0	0	0	0	0	1	0	0

© EUROCAE, 2003

(4) Stop refreshing the GICB register 05 {HEX} data and verify that the extended squitter (DF=17) ceases after 2 seconds.

(5) Restart refreshing the GICB register 05 {HEX} data and verify that the DF17 extended squitter is sent and the content is correct.

b. STEP 2 - Surface position report, high squitter rate (paragraph 3.21.2.6.3 b):

(1) Load GICB register 06 {HEX} to set surface format type = 6 and movement field to 30 kts with data pattern 35 6A AA AA AA AA AA {HEX} and refresh this data each 1 second. Enable the on-the-ground condition (squat switch discretes).

Record the extended squitter transmission (DF=17) and verify its format.

Monitor the extended squitter (DF=17) with the transponder in the in-active state. Verify the squitter is emitted at intervals between 0.4 and 0.6 seconds using a time quantisation of no greater than 15 milliseconds. Verify the random nature of the process.

(2) During the extended squitter transmission, trigger an interrogation at the transponder test set. Verify the squitter is not interrupted.

(3) Repeat (1) and (2) for data patterns 35 65 55 55 55 55 55 {HEX}, 35 60 00 00 00 00 00 and 35 6F FF FF FF FF FF {HEX}.

(4) Stop refreshing the GICB register 06 {HEX} data and verify that the extended squitter (DF=17) ceases after two seconds.

(5) Restart refreshing the GICB register 06 {HEX} data and verify that the extended squitter (DF=17) is sent again and the content is correct.

c. STEP 3 - Surface position report low squitter rate (paragraph 3.21.2.6.3 b) :

(1) Load GICB register 06 {HEX} to set surface format type = 6 and movement field to 0 kts. with data pattern 30 1A AA AA AA AA AA {HEX} and refresh this data each 1 second. Enable the on-the-ground condition (squat switch discretes).

Record the extended squitter transmission (DF=17) and verify its format.

Monitor the extended squitter (DF=17) with the transponder in the in-active state. Verify the squitter is emitted at intervals between 4.8 and 5.2 seconds. Verify the random nature of the process.

(2) During the extended squitter transmission, trigger an interrogation at the transponder test set. Verify the squitter is not interrupted.

(3) Repeat (1) and (2) for data patterns 30 15 55 55 55 55 55 {HEX}, 30 10 00 00 00 00 00 and 30 1F FF FF FF FF FF {HEX}.

(4) Stop refreshing the GICB register 06 {HEX} data and verify that the extended squitter (DF=17) ceases after two seconds.

(5) Restart refreshing the GICB register 06 {HEX} data and verify that the extended squitter (DF=17) is sent again and the content is correct.

d. STEP 4 - Aircraft Identification Squitter (paragraph 3.21.2.6.2 c):

(1) Enable airborne condition (squat switch discretes).

(2) Load GICB register 08 {HEX} (Aircraft Identification Squitter) to set format type = 4, plus large aircraft (75000 to 190000 lb.) with data pattern 23 AA AA AA AA AA AA {HEX} and refresh data every 200 ms.

(3) Monitor the extended squitter (DF=17) with the transponder in the in-active state. Verify the format of the squitter. Verify the squitter is emitted at intervals between 4.8 to 5.2 seconds using a time quantisation of no greater than 15 milliseconds. Verify the random nature of the process.

© EUROCAE, 2003

(4) Repeat steps (2) and (3) with data patterns 23 55 55 55 55 55 55 {HEX}, 23 00 00 00 00 00 00 {HEX} and 23 FF FF FF FF FF FF {HEX}.

(5) Stop refreshing GICB register 08 {HEX} and verify the contents of the extended aircraft identification squitter remains unchanged.

(6) Enable surface condition (squat switch discretes). Enable the high rate of the surface position squitter.

(7) Repeat steps (2) to (5).

(8) Enable surface condition (squat switch discretes). Enable the low rate of the surface position squitter.

(9) Repeat steps (2) to (5) but check in (3) that the identification squitter is now emitted at intervals between 9.6 to 10.4 seconds using a time quantisation of no greater than 15 milliseconds. Verify the random nature of the process.

e. STEP 5 - Airborne Velocity Squitter (paragraph 3.21.2.6.2 d):

(1) Load GICB register 09 {HEX} to indicate format type = 19 and subtype = 0 with data pattern 98 AA AA AA AA AA AA {HEX} and refresh data every 200 ms. Enable airborne condition (squat switch discretes).

(2) Monitor the extended airborne velocity squitter (DF=17) with the transponder in the inactive state. Verify the DF 17 format of the squitter. Verify the airborne velocity vector squitter is emitted at intervals between 0.4 to 0.6 seconds using a time quantisation of no greater than 15 milliseconds. Verify the random nature of the process.

(3) During the extended squitter transmission, trigger an interrogation at the transponder test set. Verify the squitter is not interrupted.

(4) Repeat (1) to (3) for data patterns 98 55 55 55 55 55 55 {HEX}, 98 00 00 00 00 00 00 {HEX} and 98 FF FF FF FF FF FF {HEX}.

(5) Stop refreshing the GICB register 09 {HEX} data and verify that the extended airborne velocity vector squitter (DF=17) ceases after two seconds.

(6) Restart refreshing the GICB register 09 {HEX} data and verify that the extended airborne velocity vector squitter (DF=17) content is again correct.

(7) Load GICB register 09 {HEX} with data pattern 98 AA AA AA AA AA AA {HEX} and refresh data every 200 ms.

(8) Enable surface condition (squat switch discretes) and verify that the extended airborne velocity squitter ceases.

f. STEP 6 - Event driven Squitter (paragraph 3.21.2.6.2 e) :

(1) General

Load GICB register 0A {HEX} to indicate format type = 29 and subtype = 0 with data pattern E8 AA AA AA AA AA AA {HEX}. Enable airborne condition (squat switch discretes).

Monitor the event driven squitter (DF=17) with the transponder in the inactive state. Verify the format of the squitter. Verify the squitter is transmitted one time only.

During the extended squitter transmission, trigger an interrogation at the transponder test set. Verify the squitter is not interrupted.

© EUROCAE, 2003

(2) Rate Limit

Load GICB register 0A {HEX} with data pattern E8 AA AA AA AA AA AA {HEX} and refresh this data each 200 ms.

Verify that the event driven squitter rate is limited to once every 500 ms.

Verify the content of the event driven squitter (DF=17).

(3) Delay due to Rate Limit

Using the transponder test set, interrogate the transponder at a high rate in order to obtain the rate limiting condition. Now load GICB register 0A {HEX} with data E8 55 55 55 55 55 55 {HEX} and verify that there is no extended squitter transmission whilst the rate limiting condition is maintained.

(4) Rate Limit boundaries

Reduce the rate of interrogation below the rate limiting condition. Verify that the event driven extended squitter is now transmitted once only. Verify the format of the event driven squitter (DF=17).

Using the transponder test set, interrogate the transponder at a high rate in order to obtain the rate limiting condition. Now load GICB register 0A {HEX} with data E8 55 55 55 55 55 55 {HEX} and verify that there is no extended squitter transmission whilst the rate limiting condition is maintained.

(5) Data Overwrite

Now load GICB register 0A {HEX} with data pattern E8 77 77 77 77 77 77 {HEX} whilst maintaining the rate limiting condition.

Reduce the rate of interrogation below the rate limiting condition. Verify that the event driven extended squitter data E8 55 55 55 55 55 55 {HEX} has been overwritten and data E8 77 77 77 77 77 77 {HEX} is now transmitted once only. Verify the format of the event driven squitter (DF=17).

g. <u>STEP 7 - ADS-B Aircraft Trajectory Intent Message</u>

Measurement Procedure:

Ensure that no Trajectory Intent data is available. Verify that no Trajectory intent message is output for a period of 20 seconds. Inject the appropriate valid ADS-B Trajectory Intent data and verify that the ADS-B Trajectory Intent message is broadcast at intervals that are distributed over the range of 1.6 to 1.8 seconds using a time quantisation of no greater than 15 milliseconds as specified in subparagraph 3.21.2.6.3 f. for as long and data is available.

Repeat the procedure for each Trajectory Intent message independently as necessary.

h. <u>STEP 8 - ADS-B Aircraft Operational Co-ordination Message</u>

Measurement Procedure:

(1) Initialization (subparagraph 3.21.2.6.3. g)

Ensure that no Aircraft Operational Coordination data is available. Verify that no Operational Coordination message is output for a period of 20 seconds. Inject the appropriate valid ADS-B Operational Coordination data. Verify that the ADS-B Aircraft Operational Coordination message is broadcast at intervals that are distributed over the range of 1.9 to 2.1 seconds using a time quantisation of no greater than 15 milliseconds as specified in subparagraph 2.2.3.3.2.6.2.b for a period of 30 +/- 1 seconds.

© EUROCAE, 2003

(2) Steady State (Subparagraph 3.21.2.6.3.g)

Initialize the equipment as in Step 1 above and when a time of 19 seconds has elapsed, verify that the ADS-B Aircraft Operational Coordination message is broadcast at intervals that are distributed over the range of 4.8 to 5.2 seconds using a time quantisation of no greater than 15 milliseconds as specified in subparagraph 3.21.2.6.3.g (2).

i. STEP 9 - ADS-B Aircraft Operational Status Message

Measurement Procedure:

Ensure that no Aircraft Operational Status data is available. Verify that no Aircraft Operational Status message is output for a period of 20 seconds. Inject the appropriate valid ADS-B Aircraft Operational Status data. Verify that the ADS-B Aircraft Operational Status message is broadcast at intervals that are distributed over the range of 1.6 to 1.8 seconds using a time quantisation of no greater than 15 milliseconds as specified in subparagraph 3.21.2.6.3 .h. (2) for a period of 30 +/- 1 seconds.

j. STEP 10 - "Extended Squitter Aircraft Status" ADS-B Event - Driven Message

Measurement Procedure:

Establish the emergency condition in accordance with ED-102/Do-260 Appendix A., Figure A.8-9, Note 2. Verify that the Emergency/Status Event Driven Message (Type-28, Subtype=1) is broadcast at intervals that are distributed over the range of 0.8 to 1.2 seconds using a time quantisation of no greater than 15 milliseconds. Clear the established emergency condition and verify that NO Emergency/Status Event Driven Messages are broadcast.

k. STEP 11 - Maximum Message Transmission Rates

Equipment Required:

Provide equipment capable of loading valid data for broadcast messages into the equipment under test through the operational interface.

Provide a method of monitoring broadcast messages output by the equipment under test.

Provide a Wide Band Dual Channel Oscilloscope (HP l7l0B, or equivalent).

Measurement Procedure:

(1) Maximum Combined Message Output rate (ED-102/DO-260 Subparagraph 2.2.3.3.2.10) -Airborne

Set the Airborne condition and load valid data into all the Broadcast messages that can be supported by the equipment under test at a rate ensuring maximum transmission rate. Also ensure that the data for all event driven messages changes at a rate requiring more than the permitted maximum output rate of two messages per second. Verify that each of the Broadcast message types are output at rates within the specified tolerance, that the Airborne Position Messages are being transmitted, and that only two event driven messages per second are transmitted. Also verify that the total combined rate is less than or equal to 6.2 messages per second.

During this test, also verify that the transmitted output power remains within the specified limits.

l. STEP 12 - Overall Squitter Randomness

Test that when several different types of squitter are being transmitted that the total process is still of a random nature.

© EUROCAE, 2003

(1) Surface condition

Enable the acquisition squitter, the extended surface squitter and the aircraft identification squitter. Measure the times between all these squitters and show that the squitter time quantisation is no greater that 15 milliseconds.

(2) Airborne condition

Enable the acquisition squitter, the extended airborne squitter, the aircraft identification squitter and the airborne velocity squitter. Measure the times between all these squitters and show that the squitter time quantisation is no greater that 15 milliseconds.

m. STEP 13 - Delayed transmission of extended squitters

(1) For each different type of extended squitter. Verify that if the transponder is in a transition cycle that that the extended squitter emission being tested is delayed until the transition cycle has finished.

(2) Verify that if an acquisition squitter or another type of extended squitter is in progress that the extended squitter under test is delayed until the process is finished.

(3) Verify that if a mutual suppression pulse is active that the extended squitter under test is delayed until the end of the suppression pulse.

(4) Repeat the above steps (1) to (3) for the five types of extended squitter, Airborne position, Surface position, Aircraft identification, Airborne velocity and Event driven squitter.

n. STEP 14 - Extended squitter antenna selection tests

For transponders operating with antenna diversity. Verify that when the transponder is in the airborne condition (squat switch discretes) that the transponder shall transmit each type of extended squitter alternately from the two antennas.

(1) Airborne squitter

Load GICB register 05 {HEX} with data pattern 50 AA AA AA AA AA AA {HEX} and refresh this data each 200 ms. Input a barometric altitude of 1000 feet on the appropriate pins of the transponder and refresh this data at the required rate. Enable the airborne condition (squat switch discretes).

Verify that the extended squitter is transmitted alternately on top and bottom antennas.

(2) Aircraft identity squitter

Load GICB register 08 {HEX} with data pattern 23 BB BB BB BB BB BB {HEX} and refresh this data each 200 ms. Enable the airborne condition (squat switch discretes).

Verify that the extended squitter is transmitted alternately on top and bottom antennas.

(3) Airborne velocity squitter

Load GICB register 09 {HEX} with data pattern 98 CC CC CC CC CC CC {HEX} and refresh this data each 200 ms. Enable the airborne condition (squat switch discretes).

Verify that the extended squitter is transmitted alternately on top and bottom antennas.

(4) Event driven squitter

not defined

© EUROCAE, 2003

Draft change proposal[162] after WG 49 meeting 4

5.4.3.2.4 Test Procedure (Extended Squitter Control) (Paragraph 3.21.2.6.7)

This procedure is only applicable to transponders equipped for extended squitter.

Connect the equipment as shown in Figure 5-3a.

Display/record the Mode S squitter information.

Test the Type Control Subfield (TCS) in SD.

a. STEP 1 - TCS command subfield

Load GICB register 05 {HEX} with data pattern 50 66 66 66 66 66 66 {HEX} and refresh this data every 200 ms.

Load GICB register 06 {HEX} with data pattern 35 6E EE EE EE EE EE {HEX} and refresh data every 200 ms.

Enable the airborne condition

Verify the airborne extended squitter (DF=17) transmission format.

Using the transponder test set. Send a UF 4, 5, 20 or 21 interrogation to the transponder, with DI=2, TCS=0, RCS=0 and SAS=0.. Verify that the extended squitter emission (DF=17) is still the airborne type.

b. STEP 2 - Test 15 sec. surface report command

Using the transponder test set. Send a UF 4, 5, 20 or 21 interrogation to the transponder, with DI=2, TCS = 1, RCS=0 and SAS=0. Verify that the extended squitter emission (DF=17) reports the surface type message for 15 seconds and then reverts to the airborne type.

c. STEP 3 - Test 60 sec. surface report command

Using the transponder test set. Send a UF 4, 5, 20 or 21 interrogation to the transponder, with DI=2 and TCS = 2, RCS=0 and SAS=0. Verify that the extended squitter emission (DF=17) reports the surface type message for 60 seconds and then reverts to the airborne type.

d. STEP 4 - Test cancel 15 sec. surface report command

Using the transponder test set. Send a UF 4, 5, 20 or 21 interrogation to the transponder, with DI=2, TCS = 1, RCS=0 and SAS=0. Verify that the extended squitter emission (DF=17) reports the surface type message then send an interrogation with the test set with DI=2 and TCS=3 and verify that the extended squitter reverts immediately to the airborne type.

e. STEP 5 - Test cancel 60 sec. surface report command

Using the transponder test set. Send a UF 4, 5, 20 or 21 interrogation to the transponder, with DI=2, TCS = 2, RCS=0 and SAS=0. Verify that the DF 17 extended squitter emission reports the surface type message then send an interrogation with the test set with DI=2 and TCS=3 and verify that the extended squitter reverts immediately to the airborne type.

f. STEP 6 - Test the Rate Control Subfields (RCS) surface rate commands (Paragraph 3.21.2.6.7):

(1) Load GICB register 05 {HEX} with data pattern 50 66 66 66 66 66 66 {HEX} and refresh this data every 200 ms.

(2) Load GICB register 06 {HEX} with data pattern 30 1E EE EE EE EE EE {HEX} and refresh data every 200 ms.

(3) Enable the surface condition

Verify the surface extended squitter (DF=17) transmission format, and that it is at low rate.

© EUROCAE, 2003

(4) Test high rate one shot of 60 sec:

Using the transponder test set. Send a UF 4, 5, 20 or 21 interrogation to the transponder, with DI=2, TCS = 0, RCS=1 and SAS=0. Verify that the extended squitter emission (DF=17) reports the surface type message for 60 seconds at the high rate and then reverts to the low rate.

(5) Test high rate one shot plus restart after 30 seconds:

Using the transponder test set. Send a UF 4, 5, 20 or 21 interrogation to the transponder, with DI=2, TCS = 0, RCS=1 and SAS=0. After 30 seconds send the same RCS command again. Verify that the DF17 extended squitter emission reports the surface type message for 90 seconds at the high rate and then reverts to the low rate.

(6) Enable the airborne condition and verify the airborne extended squitter (DF=17) transmission format.

(7) Test non-effect on airborne squitter rates:

Using the transponder test set. Send a UF 4, 5, 20 or 21 interrogation to the transponder, with DI=2, TCS = 0, RCS=1 and SAS=0. Verify that the extended squitter emission (DF=17) continues to report the airborne type message at the normal rate for airborne squitters.

(8) Enable the surface condition, load GICB register 06 {HEX} with data pattern 35 6E EE EE EE EE EE {HEX} and refresh data every 200 ms. and verify the surface extended squitter (DF=17) transmission format and that it is now at high rate.

(9) Test 60 sec. surface low rate command:

Using the transponder test set. Send a UF 4, 5, 20 or 21 interrogation to the transponder, with DI=2, TCS = 0, RCS=2 and SAS=0. Verify that the extended squitter (DF=17) emission reports the surface type message for 60 seconds at the low rate and then reverts to high rate.

(10) Low rate one shot plus restart after 30 seconds

Using the transponder test set. Send a UF 4, 5, 20 or 21 interrogation to the transponder, with DI=2, TCS = 0, RCS=2 and SAS=0. After 30 seconds send the same RCS command again. Verify that the extended squitter emission (DF=17) reports the surface type message for 90 seconds at the low rate and then reverts to high rate.

(11) Test 60 sec. suppression command:

Using the transponder test set. Send a UF 4, 5, 20 or 21 interrogation to the transponder, with DI=2, TCS = 0, RCS=3 and SAS=0. Verify that all extended squitter emission (DF=17) surface type messages are suppressed for 60 seconds and then restarts correctly.

(12) Test 120 sec. suppression command:

Using the transponder test set. Send a UF 4, 5, 20 or 21 interrogation to the transponder, with DI=2, TCS = 0, RCS=4 and SAS=0. Verify that all extended squitter emission (DF=17) surface type messages are suppressed for 120 seconds and then restarts correctly.

(13) Enable the airborne condition and verify the airborne extended squitter (DF=17) transmission format.

© EUROCAE, 2003

(14) Test non-effect of 60 sec. suppression command on airborne squitters.

Using the transponder test set. Send a UF 4, 5, 20 or 21 interrogation to the transponder, with DI=2, TCS = 0, RCS=3 and SAS=0. Verify that the DF 17 extended squitter emission airborne type message are not suppressed and continue normally.

(15) Test non-effect of 120 sec. suppression command on airborne squitters.

Using the transponder test set. Send a UF 4, 5, 20 or 21 interrogation to the transponder, with DI=2, TCS = 0, RCS=4 and SAS=0. Verify that the extended squitter emission (DF=17) airborne type message are not suppressed and continue normally.

g. STEP 7 - Surface Antenna Subfield (SAS) for surface squitters

(paragraph 3.21.2.6.7):

(For transponders with antenna diversity capability)

(1) Load GICB register 05 {HEX} with data pattern 50 66 66 66 66 66 66 {HEX} and refresh this data every 200 ms.

(2) Load GICB register 06 {HEX} with data pattern 35 6E EE EE EE EE EE {HEX} and refresh data every 200 ms.

(3) Enable the surface condition

Verify that the extended surface squitter (DF=17) is transmitted on the top antenna (default condition). Verify the contents of the squitter.

(4) Test SAS = 0 has no effect:

Using the transponder test set. Send a UF 4, 5, 20 or 21 interrogation to the transponder, with DI=2, TCS = 0, RCS=0 and SAS=0. Verify that the extended squitter emission (DF=17) surface type message continues normally on the top antenna.

(5) Test SAS = 1 selects alternate antennas for 120 sec.:

Using the transponder test set. Send a UF 4, 5, 20 or 21 interrogation to the transponder, with DI=2, TCS = 0, RCS=0 and SAS=1. Verify that the extended squitter emission (DF=17) surface type message is transmitted alternately on the top and bottom antennas for a period of 120 seconds, and then reverts to the top antenna only.

(6) Test SAS=2 selects bottom antenna only for 120 sec.:

Using the transponder test set. Send a UF 4, 5, 20 or 21 interrogation to the transponder, with DI=2, TCS = 0, RCS=0 and SAS=2. Verify that the extended squitter emission (DF=17) surface type message is transmitted on the bottom antenna only for a period of 120 seconds, and then reverts to the top antenna only.

(7) Test SAS=3 returns to default condition when alternate antennas selected:

Using the transponder test set. Send a UF 4, 5, 20 or 21 interrogation to the transponder, with DI=2, TCS = 0, RCS=0 and SAS=1. Verify that the extended squitter emission (DF=17) surface type message is transmitted alternately on the top and bottom antennas and then send a UF 4, 5, 20 or 21 interrogation to the transponder, with DI=2, TCS = 0, RCS=0 and SAS=3 and verify that the emission reverts immediately to the top antenna only.

© EUROCAE, 2003

(8) Test SAS=3 returns to default condition when bottom antenna selected :

Using the transponder test set. Send a UF 4, 5, 20 or 21 interrogation to the transponder, with DI=2, TCS = 0, RCS=0 and SAS=2. Verify that the extended squitter emission (DF=17) surface type message is transmitted on the bottom antenna only then send a UF 4, 5, 20 or 21 interrogation to the transponder, with DI=2, TCS = 0, RCS=0 and SAS=3 and verify that the squitter emission reverts immediately to the top antenna only.

(9) Enable the airborne condition.

(10) Repeat the above tests in the airborne condition and verify that the airborne squitters and squitter rates are not effected.

h. <u>STEP 8 - Test the Squitter Capability Subfield (SCS) field in capability report</u> (paragraph 3.21.1.12 f):

(1) With the transponder in the in-active state:

Using the test set extract the GICB register 10 {HEX} capability report.

Verify that the SCS 1-bit field (Bit 34 of MB field) is zero (i.e. Squitter registers are not being updated).

(2) Enable the airborne condition

Load GICB register 05 {HEX} with data pattern 50 66 66 66 66 66 66 {HEX} and refresh this data every 200 ms.

Load GICB register 06 {HEX} with data pattern 35 6E EE EE EE EE EE {HEX} and refresh data every 200 ms.

Verify that the airborne extended squitter is emitted.

Verify that a change in capability broadcast message is announced by the transponder.

Extract the announced broadcast message and verify content.

Verify that the SCS bit in the capability report (bit 34 in the MB field) is now set to 1 (i.e. Squitter registers are now being updated).

(3) Stop refreshing the GICB register 05 {HEX} and GICB register 06 {HEX} data.

Extract the announced broadcast message and verify content.

Verify that after 10 $\pm$ 1 seconds that the SCS bit in the capability report is set to zero.

Verify that a change in capability broadcast message is announced by the transponder.

(4) Enable the surface condition

(5) Load GICB register 05 {HEX} with data pattern 05 66 66 66 66 66 66 {HEX} and refresh this data every 200 ms.

(6) Load GICB register 06 {HEX} with data pattern 35 6E EE EE EE EE EE {HEX} and refresh data every 200 ms.

Verify that the surface extended squitter is emitted.

Extract the announced broadcast message and verify content.

Verify that the SCS bit in the capability report is now set to 1.

Verify that a change in capability broadcast message is announced by the transponder.

© EUROCAE, 2003

(7) Stop refreshing the GICB register 05 {HEX} and GICB register 06 {HEX} data.

Extract the announced broadcast message and verify content.

Verify that after 10 ± 1 second that the SCS bit in the capability report is set to zero.

Verify that a change in capability broadcast message is announced by the transponder.

i. STEP 9 - Test Surveillance Status Subfield (SSS) in ME (Airborne condition)

(1) Enable the airborne condition

Load GICB register 05 {HEX} with data pattern 05 66 66 66 66 66 66 {HEX} and refresh this data every 200 ms.

(2) Ensure the transponder is in the inactive state.

Verify that the airborne extended squitter is emitted.

Verify that the SSS field in ME is zero (Bits 6 and 7 of the ME field).

(3) Input 4096 identification code 7500 octal to the transponder by inputting the corresponding Control word to the transponder on the appropriate pins.

Verify the code 7500 with the transponder test set in a DF 5 reply.

Verify that the SSS field is now permanently set to value 1.

(4) Input 4096 identification code 1234 octal to the transponder by inputting the corresponding Control word to the transponder on the appropriate pins.

Verify the code 1234 with the transponder test set in a DF 5 reply.

Verify that the SSS field is now set to value 2 for a period of 18 ± 1 seconds and then is set to zero at the expiration of the TC timer.

(5) Repeat the above two test for 4096 codes 7600 and 7700.

(6) Activate the Special Position Identification pulse by inputting the corresponding Control word to the transponder on the appropriate pins.

Verify the SPI with the transponder test set in a DF 4 or 5 reply.

Verify that the SSS field is now set to value 3 for a period of 18 ± 1 seconds and then is set to zero at the expiration of the TI timer.

(7) Input 4096 identification code 7500 octal to the transponder by inputting the corresponding Control word to the transponder on the appropriate pins.

(8) Activate the Special Position Identification pulse by inputting the corresponding Control word to the transponder on the appropriate pins.

Verify the code 7500 with the transponder test set in a DF 5 reply.

Verify that the SSS field is permanently set to value 1.

(9) Input 4096 identification code 3456 octal to the transponder by inputting the corresponding Control word to the transponder on the appropriate pins. After 10 seconds activate the Special Position Identification pulse by inputting the corresponding Control word to the transponder on the appropriate pins.

Verify the code 3456 with the transponder test set in a DF 5 reply.

Verify that the SSS field is set to value 2 for a period of 18 ± 1 seconds and then is set to 3 at the expiration of the TC timer and then is set to 3 until the expiration of the TI timer when it is set to zero.

© EUROCAE, 2003

j. STEP 10 - Test Altitude Code Subfield (ACS) in ME and ATS subfield in GICB register 07 {HEX} (Paragraph 3.21.2.6.8)

(1) Enable the airborne condition

(2) Load GICB register 05 {HEX} with data pattern 50 66 66 66 66 66 66 {HEX} and refresh this data every 200 ms.

(3) Ensure the transponder is in the non-active state.

Verify that the airborne extended squitter is emitted.

(4) Load GICB register 07 {HEX} (Squitter Status Report) with data 20 00 00 00 00 00 00 {HEX}.

(5) With the test set extract GICB register 07 {HEX} and verify that the ATS 1 bit field (bit 3 of the MB field) is zero.

(6) Input a barometric altitude code to the transponder on the appropriate pins

Verify the ACS 12 bit subfield in the airborne extended squitter is correct. The contents of the ACS subfield shall be specified as the contents of the 13 bit AC field except that the M bit shall be omitted.

(7) Repeat above test for several barometric altitude values.

(8) Load GICB register 07 {HEX} with data pattern 00 00 00 00 20 00 00 {HEX}.

(9) With the test set extract GICB register 07 {HEX} and verify that the ATS 1 bit field (bit 3 of MB field) is zero.

(10) Input a barometric altitude code to the transponder on the appropriate pins.

Verify the ACS 12 bit subfield in the airborne extended squitter is now ZERO.

<To be expanded by GNSS height tests>

(11) Repeat above test for several barometric altitude values.

k. STEP 11 - Test Transmission Rate Subfield TRS in GICB register 07 {HEX} (Paragraph 3.21.2.6.9):

The transponder shall transmit surface squitters at a high or low rate depending on the values of the TRS subfield in GICB register 07 {HEX}.

(1) Enable the surface condition

(2) Load GICB register 06 {HEX} format type = 6 and aircraft movement 30 kts. with data pattern 35 66 66 66 66 66 66 {HEX} and refresh this data every 200 ms.

(3) Ensure the transponder is in the non-active state and that the squitter rate is high.

(4) Load GICB register 07 {HEX} with field TRS = 2 i.e. 80 00 00 00 00 00 00 {HEX} and refresh this data every 1 second and verify that the TRS field (bits 1 and 2 of the MB field) has a value of 2.

Verify that the surface squitter rate is now low.

(5) Load GICB register 07 {HEX} with 40 00 00 00 00 00 00 {HEX} and refresh this data every 1 second and verify that the TRS field (bits 1 and 2 of the MB field) has a value of 1.

Verify that the surface squitter rate is now high.

(6) Stop updating GICB register 07 {HEX} and verify that the contents are set to zero after 2 seconds.

© EUROCAE, 2003

Draft change proposal[168] after WG 49 meeting 4

I. STEP 12 - Test that RCS commands override TRS commands

(1) Enable the surface condition

(2) Load GICB register 06 {HEX} format type = 6 and aircraft movement 30 kts. with data pattern 35 66 66 66 66 66 66 {HEX} and refresh this data every 200 ms.

(3) Load GICB register 07 {HEX} with 40 00 00 00 00 00 00 {HEX} and refresh this data every 1 second and verify that the TRS field (bits 1 and 2 of the MB field) has value 1.

(4) Ensure the transponder is in the non-active state and that the surface squitter rate is high.

(5) Test RCS 60 sec. surface low rate command:

Using the transponder test set. Send a UF 4, 5, 20 or 21 interrogation to the transponder, with DI=2, TCS = 0, RCS=2 and SAS=0. Verify that the extended squitter (DF=17) emission reports the surface type message for 60 seconds at the low rate and then reverts to high rate.

(6) Test RCS low rate one shot plus restart after 30 seconds

Using the transponder test set. Send a UF 4, 5, 20 or 21 interrogation to the transponder, with DI=2, TCS = 0, RCS=2 and SAS=0. After 30 seconds send the same RCS command again. Verify that the extended squitter emission (DF=17) reports the surface type message for 90 seconds at the low rate and then reverts to high rate.

(7) Test RCS 60 sec. suppression command:

Using the transponder test set. Send a UF 4, 5, 20 or 21 interrogation to the transponder, with DI=2, TCS = 0, RCS=3 and SAS=0. Verify that all extended squitter emission (DF=17) surface type messages are suppressed for 60 seconds and then restart correctly.

(8) Load GICB register 07 {HEX} with field TRS = 2 i.e. 80 00 00 00 00 00 00 {HEX} and refresh this data every 1 second and verify that the TRS field (bits 1 and 2 of MB) has value 2.

Verify that the surface squitter rate is now low.

(9) Test RCS high rate one shot of 60 sec:

Using the transponder test set. Send a UF 4, 5, 20 or 21 interrogation to the transponder, with DI=2, TCS = 0, RCS=1 and SAS=0. Verify that the extended squitter emission (DF=17) reports the surface type message for 60 seconds at the high rate and then reverts to the low rate.

(10) Test RCS high rate one shot plus restart after 30 seconds:

Using the transponder test set. Send a UF 4, 5, 20 or 21 interrogation to the transponder, with DI=2, TCS = 0, RCS=1 and SAS=0. After 30 seconds send the same RCS command again. Verify that the DF17 extended squitter emission reports the surface type message for 90 seconds at the high rate and then reverts to the low rate.

(11) Test RCS 120 sec. suppression command:

Using the transponder test set. Send a UF 4, 5, 20 or 21 interrogation to the transponder, with DI=2, TCS = 0, RCS=4 and SAS=0. Verify that all extended squitter emission (DF=17) surface type messages are suppressed for 120 seconds and then restart correctly.

© EUROCAE, 2003

5.4.3.3 Mode A/C Reply Delay and Jitter (Paragraph 3.7.1)

5.4.3.3.1 Test Equipment

a. Transponder Test Set.

b. Wide Band Dual Channel Oscilloscope.

5.4.3.3.2 Test Procedures

Connect the equipment as shown in Figure 5-3.

a. STEP 1 - Reply Delay (Paragraph 3.7.1 a.)

Interrogate the transponder with a Mode A interrogation.

Synchronise the oscilloscope using the leading edge of P3.

Record the average delay between the leading edge of P3 and the leading edge of the first reply pulse at the 50% amplitude points, for signal levels of MTL, -50 dBm and -21 dBm.

b. STEP 2 - Reply Jitter (Paragraph 3.7.1 b.)

Repeat STEP 1 recording the difference in extreme positions of the leading edge of the first reply pulse for signal levels of MTL +3 dB and -21 dBm.

c. STEP 3 - Reply Delay Variation (Paragraph 3.7.1 c.)

Repeat STEP 1 using alternate Mode C and Mode A interrogations.

Record the reply delay variation between modes.

5.4.3.4 Mode S Reply Delay and Jitter (Paragraph 3.7.2a)

5.4.3.4.1 Test Equipment

a. Transponder Test Set.

b. Wide Band Dual Channel Oscilloscope.

5.4.3.4.2 Test Procedures

Connect the equipment as shown in Figure 5-3.

a. STEP 1 - Mode S Reply Delay and Jitter

Interrogate the transponder with a Mode S interrogation using any format for which a reply is required.

Synchronise the oscilloscope to the interrogation.

For signal levels of MTL, -50 and -21 dBm, record:

(1) The difference in extreme positions of the leading edge of the first reply pulse, and

(2) The average delay between the P6 sync-phase reversal and the leading edge of the first reply pulse.

b. STEP 2 - Mode A/C/S All-Call Reply Delay and Jitter (Paragraph 3.7.2 b)

Interrogate the transponder with a Mode A/C/S All-Call interrogation.

Synchronise the oscilloscope to the interrogation.

For signal levels of MTL+3dB, -50dBm and -21 dBm, record :

(1) the difference in extreme positions of the leading edge of the first reply pulse,

(2) the average delay between the leading edge of P4 and the leading edge of the first reply pulse.

© EUROCAE, 2003

Draft change proposal[170] after WG 49 meeting 4

5.4.4 Side Lobe Suppression (Paragraph 3.8)

5.4.4.1 Mode A/C, Mode A/C-only All-Call and Mode A/C/S All-Call

5.4.4.1.1 Test Equipment

a. 2 Transponder Test Sets.

b. Wide Band Dual Channel Oscilloscope.

c. 3 Port Divider.

5.4.4.1.2 Test Procedure

Connect the equipment as shown in Figure 5-5.

a. STEP 1 - Suppression Duration (Paragraph 3.8.1~~3.8.1~~ a.)

Interrogate the transponder at 450 interrogations per second with a P1-P2 pulse pair followed, after 50 µs, by a P1-P3 (Mode A, 8 µs) pulse pair.

NOTE: *All pulse levels should be set to -24 dBm; any reply code may be selected.*

Reduce this 50 µs interval until the transponder reply rate falls below 10%.

Measure the time interval between the leading edges of P2 and P1 (of the P1-P3 pair), and record this as the suppression duration S(8).

Repeat the above procedure using Mode C (21-microsecond spacing) for the P1-P3 pair; record the result as suppression duration S(21).

b. STEP 2 - Suppression Re-initiation (Paragraph 3.8.1 c.)

With an interrogation rate of 450 interrogations per second, generate a first P1-P2 pair followed by a second P1-P2 pair such that the spacing between P2 of the first pair and P1 of the second pair is S(8) plus 2 µs.

Generate a third pair, P1-P3 Mode A, 50 µs after the second pair.

NOTE: *All pulse levels should be set to -24 dBm; any reply code may be selected.*

Reducing the interval between the P1-P2 pair and the P1-P3 pair, record the interval at which the transponder replies fall below 10%.

Repeat the test using Mode C spacing for the P1-P3 pair and determine suppression duration S(21).

c. STEP 3 - Recovery After Suppression (Paragraph 3.8.1 d.)

Repeat STEP 1 using the following signal levels:

(1) P1-P2 pair = -30 dBm;

(2) P1-P3 pair = MTL.

Record the reply ratio observed when the P2 (suppression) P1 (interrogation) spacing is no more than 1 µs greater than S(8, 21) determined in previous steps.

d. STEP 4 - SLS Decoding (Paragraph 3.8.2 a.)

Interrogate the transponder with a Mode A interrogation including a P2 pulse; (RF signal levels MTL+3dB, -50 dBm and -21 dBm; P2 level = P1 level).

As the P1-P2 spacing is varied over the range from 1.85 to 2.15 µs, record the reply ratio and verify that it does not exceed 10%.

© EUROCAE, 2003

e. STEP 5 - Short Duration P2 (Paragraph 3.8.2 b (3))

Interrogate the transponder with a Mode A interrogation with :

(1) P2 level = P1 level,

(2) P2 duration less than 0.3 µs.

Record the reply ratio and verify the minimum is at least 90% at signal levels of MTL+3dB, -50 and -21dBm.

f. STEP 6 - SLS Pulse Ratio (Paragraph 3.8.2 b (1))

Interrogate the transponder with a Mode A interrogation including a P2 pulse; (P2 level = P1 -9dB).

As the P1-P2 spacing is varied over 1 to 3 µs, record the reply efficiency and verify that the minimum is at least 90% at signal levels of MTL+3dB, -50 and -21dBm.

g. STEP 7 - Suppression on Mode A/C/S All-Call

Repeat STEP 4, STEP 5, and STEP 6, with Mode A/C/S All-Call.

h. STEP 8 - Simultaneous Interrogation of Mode A/C with P2 (Simultaneous decoding of Mode A/C interrogation with Mode A/C suppression) (Paragraph 3.8.2 d.)

Interrogate the transponder with a Mode A pulse pair with:

(1) RF signal level = -50dBm,

(2) P2 level = P1 level.

Generate a 0.8 µs pulse, at the same level as P2, 8 µs before the leading edge of P2.

Observe that the reply ratio is less than 10%.

Repeat this test with the 0.8 µs pulse, 21 µs before the leading edge of P2.

i. STEP 9 - Low Signal Level Characteristics (Paragraph 3.8.2 c.)

Interrogate the transponder with a Mode A interrogation, including a P2 pulse (P2 = P1 level).

Vary the signal level from MTL to MTL+3dB.

Verify that the reply ratio does not exceed 10%.

5.4.4.2 Mode S Formats (Paragraph 3.8.3)

5.4.4.2.1 Test Equipment

a. 2 Transponder Test Sets.

b. Wide Band Dual Channel Oscilloscope.

c. 3 Port Divider.

5.4.4.3 Test Procedure

Connect the equipment as shown in Figure 5-5.

a. STEP 1 - Conditions under which a Transponder must not reply

Set the master test set to generate a Standard Mode S-only All-Call at levels of MTL+3dB, -60 dBm, -40dBm and -21 dBm.

Set the slave test set to generate a 0.8 µs duration pulse at the P5 nominal position and at a level of P6+3dB.

Verify that the reply ratio is less than 10%.

© EUROCAE, 2003

b. STEP 2 - Conditions under which a Transponder must reply

Repeat STEP 1 with P5 pulse at a level of P6-12dB.

Verify that the reply ratio is at least 99%.

5.4.5 Pulse Decoder Characteristics (Paragraph 3.9)

5.4.5.1 Test Equipment

a. Transponder Test Set.

b. Wide Band Dual Channel Oscilloscope.

5.4.5.2 Test Procedure

Connect the equipment as shown in Figure 5-3.

a. STEP 1 - Pulse Level Tolerances, Mode A/C/S All-Call (Paragraph 3.9.2 a.)

Using a Mode A interrogation followed by a 1.6-µs P4 pulse at its nominal position, interrogate at the standard rate and at an RF signal level 10 dB above MTL.

Vary the level of the P4 pulse between -10 dB and 0 dB with respect to P3.

Measure and record :

(1) the highest level of P4 relative to P3 at which 90% Mode A replies occur.

(2) the lowest level of P4 relative to P3 at which 99% Mode S replies occur.

Repeat the test at RF signal levels -60, -40 and -21 dBm.

Repeat the tests using a Mode C interrogation.

b. STEP 2 - Pulse Level Tolerances, Mode A/C-Only All-Call (Paragraph 3.9.2 b.)

Use set-up and signal levels as in STEP 1 above but use a 0.8 µs P4.

Vary the level of the P4 pulse between -10 and 0 dB with respect to P3.

Measure and record the P4 levels relative to P3 at which the Mode A reply rate falls below:

(1) 90%

(2) 10%.

Repeat the test at input signal levels -60, -40 and -21 dBm.

Repeat the tests using a Mode C interrogation.

c. STEP 3 - Pulse Position Tolerances, (P1-P3) Mode A/C-Type Interrogations (Paragraphs 3.9.3 a. & c.)

Using signal levels of MTL+10dB, interrogate with :

(1) Mode A;

(2) Mode C;

(3) Mode A/Mode S All-Call;

(4) Mode C/Mode S All-Call;

(5) Mode A-Only All-Call;

(6) Mode C-Only All-Call.

© EUROCAE, 2003

For each interrogation type,

(1) vary the P1-P3 spacing within the required acceptance range and record the minimum reply ratio,

(2) vary the P1-P3 spacing to fall out of the permitted acceptance range and record the maximum reply ratio;

(3) record the reply ratio to both the Mode A/C-Only All-Call modes.

d. STEP 4 - Pulse Position Tolerances, P4, Mode A/C/S All-Call Interrogations (Paragraphs 3.9.3~~3.9.3~~ b. & d.)

Using signal levels as in STEP 1, interrogate with

(1) Mode A/Mode S All-Call,

(2) Mode C/Mode S All-Call.

For each interrogation type,

- vary the P3-P4 spacing within the required acceptance range and record the minimum reply ratio;
- vary the P3-P4 spacing to fall out of the permitted acceptance range and record the maximum reply ratio;
- record the reply ratio to both the Mode A/C-Only All-Call modes.

e. STEP 5 - Pulse Duration Tolerances, Mode A/C Interrogations (Paragraphs 3.9.4 a.)

Using signal levels as in STEP 1 above, interrogate with

(1) Mode A,

(2) Mode C.

For each interrogation type,

- vary the P1 duration within the required acceptance range and record the minimum reply ratio;
- vary the P1 duration to fall out of the permitted acceptance range and record the maximum reply ratio.

Repeat test varying the P3 duration in the same manner.

f. STEP 6 - Pulse Duration Tolerance, Mode A/C/S All-Call Interrogation (Paragraphs 3.9.4~~3.9.4~~ b. & c.)

Using signal levels as in STEP 1 above, interrogate with:

(1) Mode A/Mode S All-Call,

(2) Mode C/Mode S All-Call.

For each interrogation type,

- vary the P1 duration within the required acceptance range and record the minimum reply ratio;
- vary the P1 duration to fall out of the permitted acceptance range and record the maximum reply ratio.

Repeat test varying the P3 duration in the same manner.

Repeat test varying the P4 duration in the same manner.

g. STEP 7 - Short Pulse Rejection, Mode A/C or Mode A/C/S All-Call Interrogations (Paragraph 3.9.4~~3.9.4~~ d.)

With an RF signal level at MTL, interrogate with each of the following interrogation types:

(1) Mode A,

(2) Mode C/Mode S All-Call.

In each case, reduce the P1 duration to 0.3 µs and record the reply ratio.

© EUROCAE, 2003

Repeat the tests at 5 dB increments up to -45 dBm input level.

Repeat the tests reducing the P3 duration in the same manner.

h. STEP 8 - Sync Phase Reversal Position Tolerance (from P2) (Paragraph 3.9.5 b.)

NOTE: *STEP 8 or STEP 9 may be used depending on the design of the transponder.*

Set the Transponder Test Set to generate a Mode S-Only All-Call interrogation at MTL+3dB.

Vary the spacing between the leading edge of P2 and the P6 sync-phase reversal transient by ±200 nanoseconds from the nominal 2.75 µs.

Record the ranges over which at least 90% Mode S replies are received.

Record the points at which no Mode S replies are received.

Repeat for RF signal levels between -50 and -21 dBm in 5 dB steps.

i. STEP 9 - Sync Phase Reversal Position Tolerances (from P6) (Paragraph 3.9.5 c.)

Set the Transponder Test Set to generate a Mode S-Only All-Call interrogation at MTL+3dB.

Vary the spacing between the leading edge of P6 and the P6 sync-phase reversal transient by ±200 nanoseconds from the nominal 1.25 µs.

Record the range over which at least 90% Mode S replies are received.

Record the points at which no Mode S replies are received.

Repeat for RF signal levels between -50 and -21 dBm in 5 dB steps.

j. STEP 10 - Simultaneous Interrogation of Mode A and Mode C (Paragraph 3.12.2)

Interrogate with Mode C.

Inject a 0.8 µs pulse of amplitude equal to P1 and P3, such that it occurs 8 µs before the P3 pulse of a Mode C interrogation.

Record that all replies are Mode C replies.

5.4.6 Transponder Desensitisation and Recovery

(Paragraph 3.10)

5.4.6.1 Test Equipment

a. 2 Transponder Test Sets.

b. Wide Band Dual Channel Oscilloscope.

c. 3 Port Power Divider.

5.4.6.2 Test Procedure

Connect the equipment as shown in Figure 5-5.

a. STEP 1 - Mode A/C Single Pulse Desensitisation and Recovery (Paragraphs 3.10.1 a. and 3.10.2)

Set the master test set to generate a single pulse not less than 0.7 µs wide at the Mode A/C interrogation rate and level.

Set the slave test set to generate a Mode A interrogation delayed 3 µs from the single pulse.

Record the amplitude of the slave test set signal required to produce 90% reply ratio.

Repeat for master to slave test set delays of 6, 10 and 15 µs.

© EUROCAE, 2003

b. STEP 2 - Recovery from a Mode S Interrogation Requiring No Reply (Paragraph 3.10.2 c.)

Set the master test set to generate a short Mode S surveillance interrogation with broadcast address.

Set the slave test set to generate a Mode A interrogation delayed with respect to the Mode S interrogation.

Record the minimum delay time between the master and the slave test sets necessary to elicit a Mode A reply ratio of 90%.

c. STEP 3 - Recovery from a Mode S Comm-C Interrogation Requiring No Reply (Paragraph 3.10.2 d.)

Set the master test set to generate the initial segment of a properly addressed Comm-C interrogation at a signal level of -21 dBm.

Set the slave test set to generate a Mode A interrogation delayed 45 µs from the sync-phase reversal of the master interrogation.

Vary the amplitude of the slave test signal and record the minimum level required to produce 90% Mode A reply ratio.

d. STEP 4 - Recovery from a Suppression Pair or unaccepted Mode A/C/S All-Call or Mode A/C-Only All-Call (Paragraphs 3.10.2 e, and 3.10.2 g.)

Set the master test set to generate a P1-P2 pulse pair at the Mode A/C standard interrogation rate and level.

Set the slave test set to generate a Mode S-Only All-Call interrogation delayed 10 µs after the last pulse of the master test set interrogation.

Record the reply ratio.

Lock out the transponder to All-Calls and repeat the procedure with Mode A/C/S All-Call and Mode A/C-only All-Call interrogations in place of the suppression pair.

e. STEP 5 - Narrow Pulse Performance (Paragraph 3.10.1 b.)

Set the master test set to generate a single pulse between 0.6 and 0.7 µs wide, at the Mode A/C interrogation rate and level.

Set the slave test set to generate a Mode A interrogation delayed 3 µs from the single pulse.

Record the amplitude of the slave test set signal needed to produce 90% reply ratio.

Repeat for master to slave test set delays of 6, 10 and 15 µs.

f. STEP 6 - Dead Time (Paragraph 3.10.3)

Set the master test set to generate a Mode A/C/S All-Call interrogation at a level of -21 dBm.

Set the slave test set to generate a Mode S-Only All-Call interrogation at a level of 3 dB above MTL.

Record the time delay between the end of the reply to the master interrogation and the start of the slave interrogation that elicits a 90% reply ratio from the transponder.

Repeat with the master test set generating a Mode S-Only All-Call at -21 dBm and the slave test set generating a Mode A interrogation at MTL+3dB.

g. STEP 7 - Recovery From a Mode S Interrogation Which Has Not Been Accepted (Paragraph 3.10.2 f)

Set the master test set to generate a Mode S surveillance interrogation but with an address different from the standard.

Set the slave test set to generate a Mode A interrogation.

© EUROCAE, 2003

Varying the delay between the master and the slave test set signals, record the interval between the synch phase reversal of the master test set signal and the P1 pulse of the slave test set signal needed to produce 90% Mode A reply ratio.

5.4.7 Response in the Presence of Interference (Paragraph 3.12)

5.4.7.1 Test Equipment

a. 2 Transponder Test Sets.

b. Wide Band Dual Channel Oscilloscope.

c. 3 Port Power Divider.

5.4.7.2 Test Procedure

With the equipment connected as shown in Figure 5-5, interrogate the transponder with the Mode S-Only All-Call interrogation at a signal level of -50 dBm and follow Steps 1 through 4 below.

a. STEP 1 - Low Level Asynchronous Interference (Paragraph 3.12.3)

Inject a 0.8 µs wide pulse with amplitude 12 dB below the P1 of the Mode S-Only All-Call, at a repetition rate of 10 000 Hz.

Record the reply ratio.

NOTE: *Take care to avoid synchronisation of the 10 000 Hz rate with the Mode S standard rate.*

b. STEP 2 - Standard Interference Pulse and Mode S SLS (Paragraphs 3.8.3 and 3.12.4)

Insert the interfering pulse (duration: 0.8 µs, level: 6 dB below P6) at a position 1.8 µs after the leading edge of P6 of a Mode S-Only All-Call.

Record the minimum reply ratio observed while slowly moving the interfering pulse from its initial position to the end of P6.

Repeat the test for all signal levels between -68 and -21 dBm in 5 dB increments.

Repeat the test with an interference pulse level 3 dB below the P6 level.

Inject the interfering pulse (now acting as P5) 0.85 µs after the leading edge of P6 and use a level 3 dB above the level of P6.

Use signal levels between MTL+3dB and -21 dBm in 5 dB increments. Record the maximum reply ratio in each case.

Reduce level of P5 to a value 12 dB below the level of P6 and repeat the test at signal levels from MTL+3dB to -21 dBm in 5 dB increments. Record the minimum reply ratio in each case.

c. STEP 3 - Pulse Pair Interference (Paragraphs 3.12.5 a, b, and c)

Insert a 0.8 µs pulse pair spaced 2.0 µs apart with amplitude 9 dB below P1 of the standard Mode S-Only All-Call, at a position such that the leading edge of the pulse pair occurs 0.25 µs after the leading edge of P1.

Record the reply ratio while moving the interfering pulse pair in 0.25 µs steps from its initial position 0.25 µs after the trailing edge of P6. Determine the average reply efficiency from the recorded values.

Repeat the test for all input levels between -68 and -21 dBm in 6 dB increments.

d. STEP 4 - DME and Other Spurious Pulse Interference Tests (Paragraph 3.12.6)

Inject pairs of pulses, of duration 3.5 µs, spaced 12 µs apart with amplitude of -30 dBm at a rate of 3 600 pulse pairs per second.

© EUROCAE, 2003

Record the reply ratio observed as the frequency of the interfering signal is varied over the ranges of 962 to 1 020 MHz, and 1 041 to 1 213 MHz.

Repeat the test using pulses spaced 30 µs apart.

Repeat the test using single pulses of 6.4 µs duration at a rate of 2000 pulses per second, with an amplitude of -80 dBm and a frequency of 1 030 MHz.

e. STEP 5 - Standard Interference Pulse Positioned at Mode A or Mode C Spacing before P1 of a Mode S Interrogation (Paragraphs 3.12.2 a and 3.12.5 d)

Insert standard interfering pulse 8 µs before, and at the same signal level as, the P1 pulse of a standard Mode S only All-Call interrogation.

Check and record that the transponder replies to the Mode S only All-Call interrogation.

Insert a standard interfering pulse 21 µs before, and at the same signal level as, the P1 pulse of a standard Mode S only All-Call interrogation.

Check and record that the transponder replies to the Mode S only All-Call interrogation.

NOTE: *This test checks that the suppression pair is the recognised pulse pair by testing that the following P6 is correctly decoded.*

f. STEP 6 - Mode A and Mode C with Standard Interfering Pulse (paragraph 3.12.4)

Overlay a Standard random Interfering Pulse over proper Mode A and Mode C interrogations with a level 10 dB below the level of the Mode A/C interrogations.

Check and record that the transponder replies to at least 90 % of the Mode A and Mode C interrogations and does not recognise the random interference pulse as P1, P2 or P3.

5.4.8 Undesired Replies (Paragraph 3.13)

5.4.8.1 Test Equipment

Transponder Test Set

5.4.8.2 Test Procedure

Connect the RF terminal of the Transponder Test set to the transponder antenna terminal.

Do not interrogate the Transponder.

Count and record the number of Mode A/C replies for a minimum of one minute.

Count and record the number of Mode S replies for a minimum of one minute.

NOTE: *Squitter and Self Test transmissions, if not inhibited, must be disabled in this test.*

5.4.9 Self-Test and Monitors (if provided) (Paragraph 3.14)

5.4.9.1 Self-Test

5.4.9.1.1 Test Equipment

a. Transponder Test Set.

b. Wide Band Dual Channel Oscilloscope.

c. RF Attenuator.

d. ATC Transponder (Similar to unit under test - transmitter disabled).

e. Frequency Counter.

© EUROCAE, 2003

5.4.9.1.2 Test Procedure

a. STEP 1 - Self-Test Interrogation/Reply Rate (Paragraph 3.14.1)

Connect the equipment as shown in Figure 5-6.

Activate the self-test function of the transponder under test and record the reply rate to the self-test interrogation for both Mode A/C and Mode S.

NOTE: *The squitter generation function may be disabled for this test.*

b. STEP 2 - Self-Test Interrogation Level (Paragraph 3.14.1)

Connect the equipment as shown in Figure 5-7, with the coax connections in position A.

Activate the self-test function of the transponder and adjust the RF attenuator until the other transponder just triggers, as indicated by the presence of suppression pulses.

Without changing the RF attenuator setting, change the coax connections to position B.

Set the Transponder Test Set to an interrogation rate equal to the reply rate determined in STEP 1 and interrogate in Mode A.

Adjust the RF level of the Transponder Test Set until transponder number two just triggers.

Record the Test Set output level.

5.4.9.2 Squitter Monitor

(Paragraph 3.14.2)

5.4.9.2.1 Test Equipment

a. Transponder Test Set.

b. Wide Band Dual Channel Oscilloscope.

5.4.9.2.2 Test procedure

Connect the equipment as shown in Figure 5-3

a. STEP 1

While monitoring the squitter transmissions, with the transponder in the inactive state, disable the squitter generator.

Verify that the squitter monitor responds to the absence of squitter transmissions, and that the equipment is indicated as being invalid by the failure warning system.

b. STEP 2

Repeat STEP 1 while interrogating the transponder with Mode A/C and Mode A/C/S All-Calls.

In each case, verify that the squitter monitor responds to the absence of squitter transmissions, and that the equipment is indicated as being invalid by the failure warning system.

5.4.9.3 Failure Indication (Paragraph 3.14.3~~3.14.3~~)

The manufacturer shall demonstrate that failures are properly detected by the self test or monitors and cause the indication to assume the "invalid" state. The generation of diagnostic error messages related to illegal 24 bit discrete addresses is tested in section 5.4.12.1.2.

© EUROCAE, 2003

Draft change proposal[179] after WG 49 meeting 4

5.4.10 Mutual Suppression Capability (Paragraph 3.15)

5.4.10.1 Test Equipment

a. Transponder Test Set.

b. Wide Band Dual Channel Oscilloscope.

5.4.10.2 Test Procedure

Connect the equipment as shown in Figure 5-8.

Interrogate on Mode A at 150 interrogations per second and set the signal level to -21 dBm.

Apply the suppression pulse for which the equipment is designed.

For interrogations occurring within the period of the suppression pulse, note that the equipment is suppressed.

Starting with the equipment suppressed, adjust for minimum delay between the trailing edge of the suppression pulse and the leading edge of the interrogation pulse pair which provides 90% reply efficiency.

Record the value of this delay.

Verify that the transponder generates a suppression pulse during its reply period.

5.4.11 Diversity Operation (Paragraph 3.16)

5.4.11.1 Test Equipment

a. Two means of generating identical Mode A/C and Mode S interrogations which can be delayed from each other by from 125 to 375 nanoseconds. These two generators must also have independent control of power level.

b. A means of determining the antenna terminal that emits the reply.

c. A means of determining the reply power level on both antennas simultaneously.

d. A means of determining the reply delay for each channel and between channels.

5.4.11.2 Test Procedure

NOTE 1: *Since tests in this paragraph can be satisfied by using many different pieces of test equipment in various configurations, no specific recommendations are made. However, the minimum functionality requirement is as stated in the following paragraphs.*

NOTE 2: *Because the specifications for diversity operations are symmetrical in all respects, channels are arbitrarily designated A and B.*

NOTE 3: *When measuring Channel A and B parameters take care that any cables used for measurements are of equal electrical length and equal loss.*

NOTE 4: *With the exception of step 4 the following tests may be conducted with the squitter inhibited.*

a. STEP 1 - Single Channel Test (Paragraphs 3.16.5 and 3.16.6)

At signal level MTL+3dB use the following types of interrogations :

(1) Mode A

(2) Mode C

(3) Mode A/Mode S All-Call

(4) Mode C-only All-Call

(5) Mode S formats UF = 4, 11 and, if so equipped, UF = 21

© EUROCAE, 2003

Interrogate Channel A only, while monitoring both channels A and B. Observe and record parameters specified in (3) below.

Repeat for signal levels of -50 and -21 dBm, using a Mode C and a Mode S format of UF = 4 types of interrogations only. Observe and record parameters specified below:

(1) reply ratio,

(2) reply channel,

(3) power level of replies from Channel A,

(4) power level of replies from Channel B,

(5) reply delay for each interrogation signal type and for the signal levels as specified;

(6) power ratio as specified in Paragraph 3.16.5.

Repeat the tests with the channels reversed.

Compare records of reply delays for conformance with paragraph 3.16.6.

b. STEP 2 - Signal Level Selection Test (Paragraph 3.16.2)

Using the following interrogations in turn:

(1) Mode A

(2) Mode C

(3) Mode A/Mode S All-Call

(4) Mode C - only All-Call

(5) Mode S formats UF = 4, 11 and, if so equipped, UF = 21

With Channel A leading:

- Synchronise the interrogations to channels A and B so that they are 0.125 µs, +0.000/-0.040 µs.
- Interrogate at a power level on Channel A of MTL and a power level on Channel B of MTL+4dB.
- Record the percentage of replies on Channel B (the requirement is not less than 90%).
- Interrogate on Channel A at a power level of MTL + 4dB, and on Channel B at a power level of MTL.
- Record the percentage of replies on Channel A (the requirement is not less than 90 %).

With Channel B leading:

- Synchronise the interrogations to channels A and B so that they are 0.125 µs, +0.000/-0.040 µs apart.
- Interrogate at a power level on Channel A of MTL and a power level on Channel B of MTL+4dB.
- Record the percentage of replies on Channel B (the requirement is not less than 90%).
- Interrogate at a power level on Channel A of MTL+4dB and a power level on Channel B of MTL.
- Record the percentage of replies on Channel A (the requirement is not less than 90%).

© EUROCAE, 2003

c. STEP 3 - Delay-Selection Test (Paragraph 3.16.4)

Using the following type of interrogation in turn :

(1) Mode A

(2) Mode C

(3) Mode A/Mode S All-Call

(4) Mode C-only All-Call

(5) Mode S formats UF = 4, 11 and, if so equipped, UF = 21

With Channel A leading:

- Synchronise the interrogations to channels A and B so that they are 0.375 µs, +0.040/-0.000 µs apart.
- Interrogate on Channel A at a power level of MTL+4dB and on Channel B at a power level of -50 dBm.
- Record the percentage of replies on Channel A (the requirement is not less than 90%).

With Channel B leading:

- Synchronise the interrogations to channels A and B so that they are 0.375 µs, +0.040/-0.000 µs apart.
- Interrogate on Channel A at a power level of -50 dBm and on Channel B at a power level of MTL+4dB.
- Record the percentage of replies on Channel B (the requirement is not less than 90%).

d. STEP 4 - Squitter Antenna Selection (Paragraph 3.16.7)

Configure the transponder with 2 antennas and verify that the squitter transmissions occur alternately from the two antennas at the prescribed rate.

Configure the transponder with one (bottom) antenna only. Verify that all squitters are directed at the prescribed rate to that antenna.

With the transponder under SAS control, verify that the acquisition squitters are delivered at the correct rates from the correct antenna.

The test should be performed as outlined in 5.4.3.2.4 g with the exception of the verification of the data content.

5.4.12 Data Handling and Interfaces

(Paragraph 3.17)

The procedures outlined in this paragraph are intended only to test "data in" and "data out" requirements of the transponder; they shall not be interpreted as being tests of the transponder's digital logic and protocols.

Some tests correspond to requirements of optional features, and therefore do not apply to all transponders.

5.4.12.1 Fixed Direct Data

(Paragraph 3.17.1 a.)

5.4.12.1.1 Test Equipment

a. Transponder Test Set.

b. Wide band dual channel oscilloscope.

© EUROCAE, 2003

5.4.12.1.2 Test Procedure

With the transponder RF port connected to the RF port of the Transponder Test Set, (Figure 5.3) perform the following test sequences:

a. STEP 1 - Mode S All-Call Address Announced (AA) Field

Interrogate the transponder with a Mode S - Only All-Call interrogation with PR, IC and CL Fields set to 0.

Record that the AA field of the transponder reply contains the address which has been set at the transponder interface.

Repeat with twenty-four different transponder addresses each consisting of 23 ZEROs and a single ONE.

b. STEP 2 - Mode S Discrete Address

Interrogate the transponder with a Mode S surveillance-altitude interrogation (UF=4) with the PC, RR, DI and SD fields set to 0 and an address consisting of ONE followed by 23 ZEROs.

Record that the transponder replies with appropriate bits set in the AP field when the same address is set at the transponder interface, and does not respond when each of the other combination of 23 ZEROs and a single ONE are entered as addresses.

c. STEP 3 - Maximum Cruising True Airspeed

Interrogate the transponder with a short special surveillance interrogation (UF=0) with the AQ field set to 1.

Record that the RI field of the transponder reply corresponds to the maximum cruising true airspeed code set at the transponder interface as each of the seven possible maximum cruising true airspeed codes is used.

d. STEP 4 - Aircraft Identification Data

Interrogate the transponder with a short surveillance-altitude interrogation (UF=4) with PC, DI and SD fields set to 0 and the RR field set to 18.

Set the aircraft identification input to the transponder to 101010.....(etc) and record that the identification data are properly transmitted in the MB field of the transponder's reply.

Repeat for an aircraft identification input of 010101.....(etc).

Repeat with an aircraft identification input of ABCD1234 coded in accordance with the character coding specified in paragraph 3.21.1.13 f.

e. Step 5 – Invalid AA

Put the transponder in the Power Off Condition and set the AA to all ZEROs. Turn on the transponder and verify that a transponder error condition is set.

Note : the transponder will normally either go into Standby State, revert to a pure Mode A/C transponder or return to the Power Off Condition.

Repeat this test with the AA set to all ONEs.

Put the transponder in the Power On Condition with an AA set to ONE for the first bit and ZEROs for all other bits. Verify that the transponder functions normally as indicated in steps 1 and 2.

Without putting the transponder in Power Off Condition change the AA to all ZEROs. Verify that the transponder generates a diagnostic error message for

© EUROCAE, 2003

maintenance and that it keeps operating using the initial AA read during the power-on initialisation process (first bit set to ONE and all other bits set to ZEROs).

Repeat this test with the AA set to all ONEs.

Repeat with the remaining twenty-three different transponder addresses each consisting of 23 ZEROs and a single ONE

5.4.12.2 Variable Direct Data (Paragraph 3.17.1 b.)

5.4.12.2.1 Test Equipment

a. Transponder Test Set.

b. Wide Band Dual Channel Oscilloscope.

5.4.12.2.2 Test Procedure

Connect the equipment as shown in Figure 5-3.

a. STEP 1 - Pressure Altitude (Mode A/C)

Interrogate the transponder with a Mode C interrogation.

With the ALT switch on, set altitude code inputs to the transponder in a manner which should result in setting each of the altitude bits in the reply one at a time.

Verify the proper positioning of these bits in the reply.

© EUROCAE, 2003

Verify that only the framing pulses are present in the reply when the ALT switch is set to "OFF".

Set the input altitude data to invalid and interrogate the transponder with a Mode C interrogation. Verify that a reply is generated containing only the framing pulses.

b. STEP 2 - 4096 Identification Code (Mode A/C)

Interrogate the transponder with a Mode A interrogation.

Set identification codes which should result in the setting of each of the identification reply bits one at a time.

Record proper positioning of these bits in the reply.

c. STEP 3 - Pressure Altitude (Mode S)

(1) Connect the transponder RF port to the transponder test set.

(2) Interrogate the transponder with a standard surveillance-altitude interrogation (UF=4) with the PC, RR, DI and SD fields set to ZERO and the address the same as that provided to the transponder.

(3) With the ALT switch ON, provide altitude code inputs from an altitude source in feet quantised to greater than 25 ft to the transponder which should result in setting each of the AC field bits of the reply, one at a time.

(4) Verify that the correct bits are transmitted in the AC field of the reply with the Q bit set to 0 and the M bit set to 0.

(5) With the ALT switch ON, provide altitude code inputs from an altitude source in feet quantised to 25 ft or less to the transponder and verify that the altitude report is correct as a minimum when the input indicates pressure altitudes of 17 050 and 34 125 ft.

(6) Verify that the correct bits are transmitted in the AC field of the reply with the Q bit set to 1 and the M bit set to 0.

(7) With the ALT switch ON, provide altitude code inputs from an altitude source quantised to 25 ft or less to the transponder. Verify that the altitude report is correct when the input indicates pressure altitudes of between 50 188 ft and 126 700 ft, which should result in setting each of the AC field bits of the reply.

(8) Verify that the correct bits are transmitted in the AC field of the reply with the Q bit set to 0 to indicate a report to 100 ft quantisation and the M bit set to 0.

(9) Repeat Step 3 (1) to (8) with the input indicating metric input if available and verify that the M bit is set to 1 in the AC field of all replies.

Verify that the AC field is all ZEROs when the ALT switch is set to “ OFF ”.

Set the input altitude data to invalid and verify that the AC field is all ZEROs.

d. STEP 4 - The 4096 Identification Code (Mode S)

With the equipment connected as in STEP 3, interrogate the transponder with a standard surveillance-identity interrogation (UF=5) with PC, RR, DI and SD fields set to ZERO.

Using the identification codes specified in STEP 2, record that the proper bit patterns exist in the ID field of the reply.

© EUROCAE, 2003

e. STEP 5 - Flight Status and Vertical Status

Interrogate with UF=0 and UF=16 and record that the VS field is a ONE when the "on-the-ground" port of the transponder is set to the "on-the-ground" condition, and a ZERO otherwise.

Interrogate with formats UF=4, 5, 20, 21 and record that the above indications are correctly contained in the FS field~~.~~ and that CA is set to 4 (airborne) or 5.(ground), if a status is provided to the transponder, and code CA=6 (either airborne or on-the-ground) is reported when the input is idle (or not available).

f. Step 6 – Invalid AA

Put the transponder in the Power Off Condition and set the AA to all ZEROs. Turn on the transponder and verify that a transponder error condition is set.

Note : the transponder will normally either go into Standby State, revert to a Mode A/C transponder or return to the Power Off Condition.

Repeat this test with the AA set to all ONEs.

Put the transponder in the Power On Condition with an AA set to ONE for the first bit and ZEROs for all other bits. Verify that the transponder functions normally as indicated in steps 1 and 2.

Without putting the transponder in Power Off Condition change the AA to all ZEROs. Verify that the transponder generates a diagnostic error message for maintenance and that it keeps operating using the initial AA read during the power-on initialisation process (first bit set to ONE and all other bits set to ZEROs).

Repeat this test with the AA set to all ONEs.

Repeat with the remaining twenty-three different transponder addresses each consisting of 23 ZEROs and a single ONE.

5.4.12.3 Standard Transaction Interfaces (Paragraph 3.17.3)

5.4.12.3.1 Test Equipment

a. Transponder Test Set.

b. A means of injecting and extracting data at transponder interface ports.

c. A means of timing transactions.

5.4.12.3.2 Test Procedure

Connect the equipment as shown in Figure 5.1.

a. STEP 1 - Uplink Interface Information Content (Paragraph 3.17.3 c.)

Interrogate the transponder with valid Mode S interrogations excluding UF 0, UF 11 and UF 16 of all uplink formats which the transponder is designed to accept, including broadcast interrogations.

Record that all fields (possibly excluding AP) of the interrogations are passed correctly through the transponder and appear at the uplink interface.

Make additional valid interrogations with the Uplink Formats and field content randomly chosen.

© EUROCAE, 2003

Record proper output of the uplink interface.

Verify and record that broadcast interrogations are identified as such, either by AP content or a special purpose code.

b. STEP 2 - Uplink Interface, "No-Storage" Design (Paragraph 3.17.3 c.)

Interrogate the transponder with valid Mode S interrogations (including broadcast but excluding UF=11 and UF=24) of all Uplink Formats which the transponder is designed to accept.

Record that all data appear correctly at the uplink interface prior to the start of the transponder reply.

c. STEP 3 - Uplink Interface, "Storage Design" Acceptance Rate (Paragraph 3.17.3 c.)

Interrogate the transponder with valid Mode S interrogations (both short and long) at the rates and time periods specified in Paragraph 3.17.3 c.

Record that all data appear correctly at the uplink interface.

d. STEP 4 - Uplink Interface, Non-acceptance (Paragraph 3.17.3 c.)

Interrogate the transponder with valid long Mode S interrogations at a rate exceeding the one specified in Paragraph 3.17.3 c.(4) for the longest time period.

Record that the transponder does not accept interrogations after the rate for which the transponder is designed has been exceeded.

Record that all data correctly appear at the uplink interface for all accepted interrogations.

With the uplink interface disconnected record that the transponder does not reply to valid long Mode S interrogations.

© EUROCAE, 2003

e. STEP 5 - Downlink Interface, Information Content (Paragraph 3.17.3 d.)

Inject an all ONEs input directed to the MB message buffer accessed by RR = 16.

Interrogate the transponder with all Uplink Formats that it is designed to accept (one interrogation of each format, RR=16 for long interrogations).

Record that all bits in the transponder replies, not set by transponder protocol requirements, are ONE.

Record that all fields in the replies, set by transponder protocol, have the correct value.

Repeat the 3 previous points with MB field data context 55 5555 5555 5555.

f. STEP 6 - Downlink Interface, "No-Storage Design" (Paragraph 3.17.3 d.)

Insert an all ONEs input, directed to the BDS buffer, accessed by RR=20.

Interrogate the transponder with a standard Comm-A, altitude interrogation.

Record that the transponder reply contains the correct data.

g. STEP 7 - Downlink Interface, "Storage Design" Buffer Rate, Buffer Function (Paragraph 3.17.3 d.)

Set up a sequence of Comm-B replies, associated with a specific BDS data source designator code, with the value of the 56 bit MB field of each reply set to a number to enable verification of reply sequence (e.g. value =2n where n is the number of the reply in the sequence).

Apply this sequence of replies to the transponder down link interface at the rate specified for long interrogations in paragraph 3.17.3 d.

Interrogate the transponder with a standard Comm-A, altitude interrogation requesting the BDS data source designator under test at the rate specified for long interrogations in paragraph 3.17.3 d.

Record that the replies include the correct data in the MB field.

Repeat for all valid BDS data source designator codes 0 to 255.

NOTE: *BDS code 0 represents AICB messages. Testing of such messages requires such messages to be closed-out after being read.*

h. STEP 8 - Downlink Interface. Unavailable Data (Paragraph 3.17.3~~3.17.3~~ d.)

Disconnect all inputs from the transponder's downlink interface port.

Interrogate the transponder with a standard Comm-A, altitude interrogation containing RR=16.

Record that the reply contains all ZEROs in the MB field.

Repeat with all RR codes from 17 through 31.

Verify that:

- For RR code 17, bits of the MB field of the reply excluding bits 1-8, 24, 26-32, 33 and 35 are set to ZEROs (bits 1-8, 24, 26-32, 33 and 35 are or may eventually be set by the transponder itself when no interface is availble).
- For RR code 18, the reply contains either all ZEROs in the MB field if the aircraft identification consists of variable direct data, or the tail number if the aircraft identification consists of fixed direct data.
- For RR code 19, bits 9-56 of the MB field of the reply are set to ZEROs.

For RR codes 20 though 31, verify that the reply contains all ZEROs in the MB field.

© EUROCAE, 2003

Draft change proposal[188] after WG 49 meeting 4

5.4.12.4 ELM Service Interfaces (Paragraph 3.17.4)

5.4.12.4.1 Test Equipment

a. Transponder Test Set.

b. Transponder ELM Data Link Device.

5.4.12.4.2 Test Procedure

Connect the equipment as shown in Figure 5-1.

Connect the Transponder Test Set or the ELM data link device to the ELM interface port of the transponder and perform the following sequences.

© EUROCAE, 2003

a. STEP 1 - ELM Uplink Interface, Data Rate (Paragraph 3.17.4 c.)

Interrogate the transponder with four 16-segment uplink ELMs (each segment having unique coding) with interrogations spaced 50 µs apart, and a new 16-segment ELM starting each second.

After 4 seconds, interrogate the transponder with another set of four 16-segment ELMs.

Record that correct data appear at the ELM interface, within one second after completion of the delivery of the corresponding uplink ELM, for both interrogation sequences.

Verify that the interface reports an interrogator identifier code of 0.

b. STEP 2 - ELM Uplink Interface, Interrogator Identification (Paragraph 3.17.4 e)

Repeat STEP 1 using the multisite protocol.

Use different Interrogator Identifier codes and verify that they are correctly reported at the interface.

c. STEP 3 - ELM Downlink Interface, Data Rate (Paragraph 3.17.4 d.)

Set up a downlink ELM which conforms to the maximum capability of the transponder (each segment with unique coding) on the Transponder Test Set or ELM data link device.

Interrogate the transponder with a Comm-C (UF=24) with RC=3 and SRS="all ONEs".

Check that all segments are correctly transmitted 136 ±1 µs, apart.

5.4.12.5 Comm-B Downlink Interface, Message Cancellation (Paragraph 3.17.5)

5.4.12.5.1 Test Equipment

a. Transponder Test Set.

b. Transponder Data Link Device.

5.4.12.5.2 Test Procedure

Connect the equipment as shown in Figure 5-1.

Connect the Transponder Test Set or the data link device to the interface port of the transponder and perform the following sequences.

a. STEP 1 - Cancellation Before Transmission

Interrogate the transponder with UF=4, 5, 20 and 21 and RR ≠16. Verify that the DR code in the transponder reply is set to 0.

Insert a Comm-B message into the downlink interface for transmission.

Interrogate the transponder with UF=4, 5, 20 and 21 in turn.

Verify that the DR code in its replies is set to 1.

Cancel the message via the interface, interrogate again to verify that the DR code is set to zero.

b. STEP 2 - Cancellation After Transmission

Interrogate the transponder with UF=4, 5, 20 and 21, RR ≠ 16 and verify that the DR code is set to 0.

Insert a Comm-B message into the downlink interface for transmission.

© EUROCAE, 2003

Interrogate the transponder with UF=4, 5, 20 or 21 and extract the message using RR=16.

Cancel the message via the interface, interrogate again with UF = 4, 5, 20 or 21 with RR = 16 to verify that the DR code in the transponder reply is set to zero.

c. STEP 3 - Cancellation in Multisite Environment

Interrogate the transponder with UF=4, 5, 20 and 21 and verify that the DR code is set to 0.

Prepare two messages, m1 and m2, of differing content, for insertion into the interface.

Insert m1 into the downlink interface for transmission and extract message using the multisite protocol (RR=16, DI=1, IIS more than 0, MBS=1).

Cancel m1 via the interface and reinterrogate to verify that the UM field does not show a Comm-B reservation and that the DR code in the transponder reply is set to zero.

Within less than 15 seconds of cancelling m1, insert m2 into the interface and extract using the multisite protocol with different IIS.

Verify that the second message has been extracted and close out the transaction using DI=1, IIS as for m2, MBS=2.

Verify that the DR field in the transponder reply is set to zero and that the UM field does not show a Comm-B reservation.

NOTE: *This two-message sequence is needed to verify that a complete cancellation has been achieved by way of the interface.*

d. STEP 4 - Cancellation Within a Queue

If the interface is designed to store more than one message in the transponder, where one message is ready to be transmitted and other messages are queued for subsequent transmission, the following test shall be performed.

Insert the maximum number of messages into the transponder and cancel via the data interface one of the messages that is not scheduled for immediate transmission.

Extract all messages and verify that the cancelled message does not appear.

Repeat the test for each possible message location in the queue.

5.4.12.6 Downlink ELM Interface, Message Cancellation (Paragraph 3.17.5)

5.4.12.6.1 Test Equipment

a. Transponder Test Set.

b. Transponder ELM Data Link Device.

5.4.12.6.2 Test Procedure

Connect the equipment as shown in Figure 5-1.

Connect the Transponder Test Set or the ELM data link device to the ELM interface port of the transponder and perform the following sequences.

a. STEP 1 - Cancellation Before Transmission

Insert an ELM message, occupying as many segments as the transponder will permit, into the downlink interface for transmission.

Interrogate the transponder with UF=4, 5, 20 and 21.

© EUROCAE, 2003

Verify that the DR code in the replies is larger than 16 and correctly reflects the number of inserted segments.

Cancel the message via the interface.

Interrogate again and verify that the DR code is now not larger than 16.

b. STEP 2 - Cancellation After Transmission

Insert an ELM message, occupying as many segments as the transponder will permit, into the downlink interface for transmission.

Extract the message with a valid interrogation UF=24 using RC=3 and SRS set to extract the correct number of segments.

Cancel the message via the interface.

Interrogate again and verify that the DR code is now not larger than 16.

5.4.13 Interface Integrity Testing (Paragraph 3.17.2 b.)

Compliance with this requirement shall be demonstrated either by direct test in a simulated operational environment or by analysis based on the known characteristics of proven interface techniques.

5.4.14 Power Interruption (Paragraph 3.24~~3.24~~)

Apply the momentary power interruption sequence appropriate for the transponder environmental category as specified in ED-14D Section 16. Two seconds after the restoration of power following each power interruption, interrogate the transponder with a Mode S-only All-Call interrogation (UF=11) with IC and CI equal to 0. Verify that a correct All-Call reply (DF=11) is transmitted in response to this interrogation.

5.5 TEST PROCEDURES FOR THE SURVEILLANCE AND COMMUNICATIONS PROTOCOLS

5.5.1 Introduction

This paragraph includes tests to verify the transponder's processing functions. (The tests described in preceeding paragraphs verify transponder performance as a receiver and transmitter of signals.) The nature of these processing tests is such that some means of automatically controlling, sequencing and evaluating the tests is necessary if the tests are to be practical. It is assumed that an automatic capability is available for executing these tests. The only exception is a technique for manual testing of Mode S parity, which is included as a simple procedure for verifying the proper implementation of the parity codes.

5.5.2 Transponder States

Upon receipt of an interrogation, the action of a Mode S transponder is dependent upon the interrogation type and format, and the "state" of the transponder at the time of receipt. The address of the interrogation must be correct, the format must be one the transponder is equipped to receive, and the reply format requested must be within the capability of the transponder. If all of the above criteria are met, and if the transponder is not locked out to the interrogator identity, the interrogation will be accepted. The content of the reply will depend not only on the content of the interrogation but also on control inputs to the transponder, such as Alert and SPI, and on data existing at the transponder interfaces such as the altitude code and waiting messages.

The overall state of Level 1 transponder is determined by the status of 19 timers: Suppression, Lockout, Alert, SPI, and 15 selective lockout timers.

© EUROCAE, 2003

Data link transponders have additional possible states defined by data link reservation timers and the condition of link protocol status registers.

A Level 1 transponder could receive 2^{56} (approximately 7×10^{16}) different interrogation patterns, of which about 33 million must be accepted because they are of the correct address and format. Of these, about 200 require that a correct reply, as specified in paragraph 3.18 of this document, be returned. The corresponding numbers for data link transponders are proportionally larger.

Certain interrogation patterns are illogical and should never be transmitted by an interrogator. It is also physically impossible for certain combinations of timer and register conditions to occur simultaneously in a correctly functioning transponder. However, if any illogical interrogation pattern is inadvertently transmitted, the transponder must not respond inappropriately or transition to an improper state. Thus, tests are included to subject the transponder to specific illogical interrogation patterns to verify that it reacts as specified in paragraph 3.18.

5.5.3 Logic Tests

Many of the specifications of paragraph 3.18 involve "sufficient condition" logic. That is, taken in the context of the entire document, the statement "On receipt of PC=1 the transponder shall be locked out," means: "If and only if PC=1, the transponder shall be locked out." The tests then must verify that PC=1 causes the lockout state, and also that other signals (some of which may include other messages in the same location used for the PC field) do not cause this state.

Exhaustive tests would have to combine all possible interrogation patterns with all possible transponder states, verify that the transponder takes the specified action for specified combinations of interrogation patterns and transponder states, and verify that it takes no action for all other combinations.

The number of possible state-pattern combinations makes it impossible to perform exhaustive tests within a reasonable time period. A practical test procedure separates required tests into two categories: positive tests and negative tests.

Positive tests verify that the transponder acts as required by the specifications in paragraph 3.18 and the accompanying flowcharts. For example, PC=1 received in the correct format must cause lockout for the specified time.

Negative tests verify that the transponder does not react to unspecified codes or patterns. For example PC=1 must not cause lockout.

The positive tests included are exhaustive in the sense that every action specified in paragraph 3.18 is tested. Negative tests have been chosen according to the seriousness of a possible malfunction. For example, negative tests of the lockout protocol are important because a malfunction can make the transponder invisible to a ground interrogator. Thus, all PC codes are tested.

5.5.4 Tests for Data Flow

Data flow through the transponder must also be verified. However, totally exhaustive testing of data flow is not practical. Tests for data flow cannot be clearly classified as positive or negative. They are designed such that all functions between data input and transponder action on that data are verified. The procedures are intended to identify the most probable failure modes.

Accuracy of data transfer by the transponder in either direction is verified by these tests. That is, message patterns entering must be identical with message patterns leaving the transponder.

5.5.5 Scope of Tests

The tests verify that the functions required by the text in paragraph 3.18 are carried out regardless of the design approach.

© EUROCAE, 2003

Draft change proposal[193] after WG 49 meeting 4

5.5.6 Required Test Equipment

The test equipment described here is required for all procedures except Procedure #1 (Error protection).

a. Automatic Test Controller

The test controller shall be capable of sequencing the test procedures and analyzing the content of the transponder's responses. Program instructions for the test controller shall be generated by the user according to the procedures of paragraph 5.5.8 and the instructions of paragraph 5.5.7.

b. Signal Generator

The signal generator shall:

(1) generate nominal (paragraph 1.6) waveforms for Mode A/C and Mode S interrogations.

(2) be capable of a continuous interrogation rate of 50/sec (Some tests for an ACAS-compatible transponder require 60/sec.).

(3) be capable of a peak interrogation rate of 2500/sec (paragraph 3.4.2).

(4) have a parity generator (paragraph 3.20.2.1 and Figure 3-8).

(5) have means to accept control commands for:

- the type of interrogations to be made (Mode A, C; Mode A/C /Mode S All-Call; Mode A/C-Only All-Call; Mode S formats).
- the value (ONE or ZERO) for each bit in a Mode S interrogation, excluding the bits in the AP field.
- the value (ONE or ZERO) for each bit of the Mode S address.
- the timing of the interrogation.

(6) generate interrogation signal levels of -60 and 0 dBm.

c. Reply Receiver

The reply receiver shall:

(1) Accept all Mode A/C replies and pass on their content to the test controller.

(2) Accept all Mode S replies, carry out the decoding function for AP or PI (Figure 3-9), and pass on the reply content and the decoded address or the interrogator identity to the test controller.

d. Interface Adaptor

The interface adaptor shall be able to transfer information content between all applicable interfaces and the test controller in either direction.

Some tests require the use of equipment that simulates certain functions of an ACAS unit. The simulation equipment should enable the transponder to send and receive data on the ACAS/transponder interface using appropriate interface protocols and response times appropriate for an actual ACAS operating with the ACAS/transponder interface. The simulation equipment should allow specific bit configurations to be sent to the transponder and allow for information received from the transponder to be examined.

NOTE: *Interface designs are not standardized, and therefore can range from one universal interface to several separate interfaces for direct and indirect data. Interfaces for some functions (4096, SPI, etc.) may not be electrically accessible and would thus require manual setting.*

© EUROCAE, 2003

5.5.7 Selection and Use of the Test Procedures

a. Selection

Given the range of possible transponder designs and capabilities, the test procedures of paragraph 5.5.8 must be chosen to match the transponder (See paragraph 1.4.2.1). Test procedures are included for:

Transponder	Paragraph	Procedures
The level 1 transponder	3.20	2 to 13
The data link (level 2) transponder	3.21.1	2 to 23 and 29
The data link ELM (level 3) transponder	3.21.3	2 to 25 and 29
Full ELM capability (level 4) transponder	3.21.4	2 to 29
ACAS-Compatible Mode S transponder	3.23~~3.23~~	2 to 13, 17, 30 to 37

The Error Protection Test (Procedure #1) is used to verify the correct operation of the error protection circuitry of the test equipment and the transponder. Its initial application is recommended.

b. Use

The test procedures in paragraph 5.5.8 constitute a detailed set of program instructions for the test controller.

The procedures describe a set of interrogation sequences and replies that must be carried out to verify one specific operation, protocol or action of the transponder. The number of required transactions (interrogation-reply pairs) may vary depending on the transponder design (for example, for diversity transponders, all tests must be applied to both channels) and the details of the controller instructions. The number of verifications is fixed for each transponder design.

Since each procedure sequence tests only one specific transponder action, it is possible to combine transactions such that more than one transponder action is tested. For example, while interrogation-reply protocols are being verified, the content of the interrogations can also be checked to verify reply content.

It is not required that the described sequences follow consecutively. Transactions of one sequence may be used to bring the transponder into a state required for another sequence. Other tests may be executed while waiting for timer runout.

The transponder is required to reply to at least 99% of valid interrogations in the Mode S format and to at least 90% in the Mode A/C format. Reinterrogation capability must be provided for instances of non-reply. Given the large number of transactions carried out during these tests, a valid reason for rejection would be a reply failure rate, cumulatively recorded, that exceeds the specified rate.

5.5.8 Test Procedures

5.5.8.1 PROCEDURE #1 - Error Protection (Paragraph 3.20.2.1)

The correct function of the two coding-parity processes in the transponder can be automatically verified by a hardware circuit in the test generator, designed according to Figure 3-9. The test set (signal generator/analyzer) carries out the correct encoding process. A transponder will recognize the correct address and will in turn correctly generate the AP and PI fields.

© EUROCAE, 2003

It is also possible to observe the function of the transponder's and test set's error protection circuits if the AP pattern resulting from known text and address is known. However, since the correct values of 24 bits must be verified from an oscilloscope presentation, the deciphering of the phase reversals in the uplink P6 or the relative pulse positions in the downlink becomes laborious.

Patterns for the AP field exist that are easily distinguished in an oscilloscope presentation. Combinations of text (the bit stream before the AP or PI fields) and address exist for which AP and PI consist of all ZEROs or of another easily recognizable and verifiable pattern. They are presented here.

5.5.8.1.1 Test Equipment

a. Test set capable of generating Mode S interrogations at a 0 dBm power level.

b. DPSK modulation detector (a simple diode detector is adequate for manual determination of the location of phase reversals in a 0 dBm signal).

c. Wide-band oscilloscope (HP1710B, or equivalent).

5.5.8.1.2 Test Procedure

a. Verification of Transponder's Downlink Encoding Circuit for PI

At the transponder's address setting interface, set addresses shown in the following list, depending on the internal CA report:

(1) If CA=0, set AA to 03 13 D4 {HEX}.

(2) If CA=4, set AA to 03 2B E2 {HEX}.

(3) If CA=5, set AA to FC DF EB {HEX}.

(4) If CA=6, set AA to 03 37 F9 {HEX}.

(5) If CA=7, set AA to FC C3 F0 {HEX}.

Interrogate with the Mode A/C/S All-Call and verify that in the reply PI is all ZEROs by monitoring the detected transponder reply video on the oscilloscope.

NOTE: *This test verifies the transponder's downlink encoder without relying on the correct operation of the Mode S test set.*

b. Verification of Test Set Error Protection Circuits

Connect the diode detector and oscilloscope to the RF output of the test set and generate a signal strong enough to register on the oscilloscope. Synchronize with the test set interrogation rate and observe the shape of the resulting P6 pulse. The phase transitions within P6 will cause amplitude modulation that can be easily observed. The following combinations of texts and interrogation addresses AA will result in AP as shown:

UF=4,	all fields = 0, AA = CO 51 F6 {HEX} :	AP = all ZEROs.
UF=4,	all fields = 0, AA = 3F AB F2 {HEX} :	AP = AA AA AA {HEX}.
UF=20,	all fields = 0, AA = AC C5 55 {HEX} :	AP = all ZEROs.
UF=20,	all fields = 0, AA = 53 3F 51 {HEX} :	AP = AA AA AA {HEX}.

c. Verification of Transponder's Downlink Encoding Circuits for AP

Couple the modulation detector into the RF connection between the test set and transponder so that the transponder's reply waveform can be observed. Interrogate the transponder so that the following reply formats are generated and observe the reply pulses on the oscilloscope:

© EUROCAE, 2003

DF=5,	all fields = 0, AA = 20 78 CE {HEX} :	AP = all ZEROs.
DF=5,	all fields = 0, AA = 75 2D 9B {HEX} :	AP = 55 55 55 {HEX}.
DF=21,	all fields = 0, AA = 0B 15 4F {HEX} :	AP = all ZEROs.
DF=2l,	all fields = 0, AA = 5E 40 1A {HEX} :	AP = 55 55 55 {HEX}.

5.5.8.2 PROCEDURE #2 - Interrogation Acceptance Test

(Paragraph 3.20.2.2~~3.20.2.2~~ - acceptance, level 1 transponder)

(Figure 3-10 - flowchart, level 1 transponder)

(Paragraph 3.20.2.3 - coordination, level 1 transponder)

(Paragraph 3.21.1.1 - acceptance, data link (level 2) transponder)

(Figure 3-15 - flowchart, all data link transponders)

(Paragraph 3.21.1.4- coordination, data link (level 2) transponder)

(Paragraph 3.21.3 - coordination, ELM)

a. Interrogation-Reply Coordination, Mode A/C and Mode A/C/S All-Call

Interrogate transponder with :

(1) Mode A.

(2) Mode C.

(3) Mode A/S All-Call.

(4) Mode C/S All-Call.

(5) Mode A-Only All-Call.

(6) Mode C-Only All-Call.

Repeat all the above and include the P2 suppression pulse.

Repeat all the above with the "on-the-ground" report (VS or FS field) indicating the on-the-ground condition.

Verify proper reply and reply format or no reply, as required.

For each interrogation in this test verify proper reply and reply format or no reply, as required.

b. Interrogation-Reply Coordination, Mode S Formats

Interrogate the transponder with all Mode S formats: UF=0 to UF=24.

- For UF=0, 16 use both RL codes 0 and 1.
- For UF=4, 5, 20, 21 use all RR codes 0 through 31.
- For UF=24, use RC=2 in order to get a reply. For UF=11, use interrogation address FF FFFF {HEX}.
- For all other interrogations, use the interrogation address to which the transponder has been set.

Verify proper reply and reply format as required for this transponder design :

(1) Proper non-reply to unspecified formats and uplink formats for which the transponder is not equipped.

(2) Proper non-reply if the transponder design cannot generate the reply format demanded by RR or RL.

© EUROCAE, 2003

Non-acceptance conditions in the "on-the-ground" condition:

- Interrogate the transponder with a Mode S All Call interrogation (UF=11) and with the "on-the-ground" condition being true.
- Verify no reply occured.

Non-acceptance conditions not covered in this test are verified elsewhere as follows :

- Buffers full - Procedure #15
- Wrong Address - Procedure #9
- Broadcast but short format - Procedure #16
- Lockout - Procedures #4 and #5
- PR function, stochastic - Procedure #13

5.5.8.3 PROCEDURE #3 - CA Verification (Paragraph 3.18.4.5)

A separate test sequence is not required.

Verification shall be made during the interrogation acceptance test (Paragraph 5.5.8.2) and using squitter transmissions.

CA=7 is verified for cases with the following transponder settings: DR not zero, DR=0 and FS=2, DR= 0 and FS=3, DR=0 and FS=4, DR=0 and FS=5.

5.5.8.4 PROCEDURE #4 - Non-Selective Lockout Tests (Paragraph 3.20.2.4)

Non-selective lockout is initiated on receipt of a correctly addressed interrogation UF = 4, 5, 20, 21 containing PC=1 or LOS=1 together with IIS=0. This starts the T_D timer which holds the lockout condition for 18 ±1.0 seconds.

Non-selective Lockout applies to both (8 and 21 µs) Mode A/C/Mode S All-Calls and to UF=11 with IC and CL equal to 0.

The lockout state is verified by interrogating with the locked-out All-Call types and by observing that a reply is not generated.

The lockout duration is verified by interrogation with the locked-out All-Call types 100 milliseconds before the earliest permissible timer runout and by observing that a reply is not generated.

The lockout termination is verified by interrogation with the locked-out All-Call types 100 milliseconds after the latest permissible timer runout and by observing that a reply is generated.

The timer restart feature is verified by transmitting a second lockout command while the lockout is still in effect and by observing that lockout termination occurs after the latest permissible timer runout reckoned from the last lockout command.

Negative tests verify that interrogation patterns not specifically designated as lockout commands do not cause a lockout condition in the transponder, and that lockout affects only the specified formats.

a. Positive Tests

Interrogate with UF=4, PC=1.

Verify: Lockout state, lockout duration, lockout termination.

Repeat with UF=5, PC=1 for Level 1 transponder. Repeat with UF=5, UF=20, UF=21 and PC=1 for all other designs.

Repeat, using LOS=1 with IIS=0 as the lockout command.

© EUROCAE, 2003

Draft change proposal[198] after WG 49 meeting 4

Recommended Test Sequence:

Item	Time (sec)	Action
a.	0	Interrogate with UF=4, PC=1.
b.	0.02	Verify lockout with Mode A/Mode S All-Call.
c.	0.04	Verify lockout with Mode C/Mode S All-Call.
d.	0.06	Verify lockout with UF=11, IC=0, CL=0, PR=0.
e.	16.9	Repeat items b, c, d.
f.	19.1	Verify termination with All-Call.
g.	19.12	Verify termination with Mode A/C Mode C/Mode S.
h.	19.14	Verify termination with UF=11, IC=0, CL=0, PR=0.
i.	21.0	Interrogate with UF=5, PC=1.
j.	21.02	Verify as in items b, c, d.
k.	26.0	Interrogate with UF=20, PC=1.
l.	26.02	Verify as in items b, c, d.
m.	31.0	Interrogate with UF=2l, PC=1.
n.	31.02	Verify as in items b, c, d.
o.	41.9	Verify as in items b, c, d.
p.	46.9	Verify as in items b, c, d.
q.	50.1	Verify termination as in items f, g, h.

NOTE: *This sequence must be modified for level 1 transponders, because they do not accept long interrogations.*

b. Required Negative Tests

(1) PC Discrimination

The interrogation patterns are:

UF = 4, 5, 20, 21.

PC = 0, 2, 3, 4, 5, 6, 7.

Total number of patterns = 28.

With the transponder not in non-selective lockout state, interrogate with all of the above patterns consecutively. Verify that the non-selective lockout state never exists during this test sequence.

(2) Broadcast Discrimination

The interrogation patterns are:

UF = 4, 5, 20, 21.

PC = 0, 1, 2, 3, 4, 5, 6, 7.

IIS = 0.

LOS = 1.

Address = Broadcast (FF FFFF {HEX}).

Total number of patterns = 32.

With the transponder not in non-selective lockout state, interrogate with all patterns consecutively. Verify that the non-selective lockout state never exists during this test sequence.

(3) Address Discrimination

The interrogation patterns are:

UF = 4, 5, 20, 21.

PC = 1.

Address: not for this transponder.

Total number of patterns = 4.

© EUROCAE, 2003

With the transponder not in non-selective lockout state, interrogate with all of the above patterns. Verify that the non-selective lockout state never exists during this test sequence.

(4) II/SI Discrimination

The interrogation patterns are:

UF	=	11.			
PR	=	0.			
CL	=	0 through 1;	IC	=	1 through 15
CL	=	2 through 4;	IC	=	0 through 15

Total number of patterns = 78.

(refer to paragraphs 3.18.4.9, 3.18.4.15, 3.18.4.7)

With the transponder in non-selective lockout state, interrogate with all of the above patterns and verify that they are not locked out.

(5) All-Call Discrimination

This test verifies that the lockout state applies only to All-Call formats and not to Mode A/C or discrete interrogations. The interrogation patterns are:

All non-All-Call formats for which the transponder is designed (Procedure #2).

With the transponder in non-selective lockout state, interrogate with all of the above patterns and verify that they are not locked out.

5.5.8.5 PROCEDURE #5 Selective Lockout Tests (Paragraph 3.20.2.5)

Selective lockout is initiated on receipt of a correctly addressed interrogation UF=4, 5, 20, 21 containing DI=1 or 7 (with LOS=1 and IIS from 1 to 15) or DI = 3 (with LSS= 1 and SIS from 1 to 63). This starts the T_L timer associated with the received II or SI code and holds the lockout condition for 18 ±1.0 seconds.

Selective lockout applies only to UF=11 with a non-zero II or a non-zero SI (indicated by CL and IC fields) corresponding to the running T_L timer.

The lockout state, duration, termination and restart are defined and tested as described in Procedure #4. Negative tests follow the same procedures and have the same purpose as described in Procedure #4.

5.5.8.5.1 Pattern Definition

a. Level 1 Transponders

The patterns below are a list of possible patterns that can be used to run the tests in this procedure for Level 1 Transponders.

Positive Interrogation Patterns per Timer (II Related)

UF: 4, 5 (2 codes).

DI: 1,7 (2 codes).

LOS: 1 (1 code).

Total: 4 patterns starting lockout per timer.

Positive Interrogation Patterns per Timer (SI Related)

UF: 4, 5 (2 codes).

DI: 3 (1 code).

LSS: 1 (1 code).

Total: 2 patterns starting lockout per timer.

© EUROCAE, 2003

Total Interrogation Patterns per Timer

UF: 4, 5 (2 codes).

DI: 0,1,2,3,4,5,6,7 (8 codes).

LOS: 0, 1 (2 codes).

LSS: 0, 1 (2 codes).

Positive test patterns: 6.

Negative test patterns: 58.

Total: 64 possible patterns per timer.

b. Pattern Definition of All Other Transponder Designs

The patterns below are a list of possible patterns that can be used to run the tests in this procedure for Level 2 Transponders and above.

Total Interrogation Pattern per Timer (II Related)

UF: 4, 5, 20, 21 (4 codes).

DI: 1,7 (2 codes).

LOS: 1 (1 code).

Total: 8 possible patterns per timer.

Positive Interrogation Patterns per Timer (SI Related)

UF: 4, 5, 20, 21 (4 codes).

DI: 3 (1 code).

LSS: 1 (1 code).

Total: 4 patterns starting lockout per timer.

Total Interrogation Patterns per Timer

UF: 4, 5, 20, 21 (4 codes).

DI: 0,1,2,3,4,5,6,7 (8 codes).

LSS: 1 (1 code).

Positive test patterns: 12.

Negative test patterns: 116

Total: 128 patterns.

5.5.8.5.2 Test Sequence

Because seventy eight timers, each running 18 ±1.0 seconds, are involved, a test sequence is shown here that minimizes the time needed, while providing a comprehensive validation of transponder performance.

5.5.8.5.3 Principle of Test Sequence

A lockout timer is started by a surveillance or Comm-A interrogation and with the next interrogation, the lockout state is verified for UF=11 with the corresponding II or SI (indicated by CL and IC fields). Just before the earliest and just after the latest timer runout duration, lockout and non-lockout state is verified.

For tests #2 and #3 timer intervals shall be interlaced to verify their independence and to save time.

The requirement that each timer can be restarted while running shall also be verified.

© EUROCAE, 2003

Draft change proposal[201] after WG 49 meeting 4

a. Test #1 - Multisite, T_L Timer and Lockout: Timer Duration and Insensitivity to Non-Valid Signals (All Transponders)

(1) run test for each IIS related T_L timer

Time (sec)	Action
0.00	Start timer with UF=4, DI= 1, LOS = 1
0.02	Verify lockout to timer's II with UF=11.
0.04 to 9.90	Verify non-lockout to all other IIS and SIS.
10.0	Try timer restart with correct IIS and incorrect DI - LOS combinations (DI= 0, 2, 3, 4, 5, 6 and Bit 26 (location of LOS)=0,1; DI = 1, 7 and LOS = 0 (14 combinations))
13.3	Try timer restart with correct IIS and all DI-LSS combinations (DI=0, 1, 2, 3, 4, 5, 6, 7 and Bit 23 (location of LSS)=0,1 (16 combinations)).
16.9	Verify lockout to timer's II with UF=11.
19.1	Verify non-lockout with UF=11.

If the last test fails, the timer either runs too long or has been restarted by a non-valid signal.

(2) run test for each SIS related T_L timer

Time (sec)	Action
0.00	Start timer with UF=4, DI = 3, LSS =1.
0.02	Verify lockout to timer's SI with UF=11.
0.04 to 9.90	Verify non-lockout to all other IIS and SIS.
10.0	Try timer restart with correct SIS and all DI-LOS combinations (DI=0, 1, 2, 3, 4, 5, 6, 7 and Bit 26 (location of LOS)=0,1 (16 combinations))
13.3	Try timer restart with correct SIS and incorrect DI-LSS combinations (DI=0, 1, 2, 4, 5, 6, 7 and LSS=0,1; DI=3 and Bit 23 (location of LSS) = 0 (15 combinations)).
16.9	Verify lockout to timer's SI with UF=11.
19.1	Verify non-lockout with UF=11.

If the last test fails, the timer either runs too long or has been restarted by a non-valid signal.

b. Test #2 - Multisite T_L Timer and Lockout: Restart Capability and Sensitivity to Valid Formats (All Transponders)

(1) run test for each IIS related T_L timer, using DI=1

Time (sec)	Action
0.00	Start timer with UF=4, DI = 1, LOS = 1
0.02	Verify lockout to timer's II with UF = 11.
4.5	Restart timer with UF=5, DI = 1, LOS = 1.
21.4	Verify lockout for timer's II with UF = 11.
23.6	Verify non-lockout for timer's II with UF = 11.

Interlace all timers in approximately 0.3 second intervals.

If the test at 21.4 seconds fails, the timer has not been restarted.

© EUROCAE, 2003

(2) run test for each IIS related T_L timer, using DI=7

Time (sec)	Action
0.00	Start timer with UF=5, DI=7, LOS=1.
0.02	Verify lockout to timer's II with UF = 11.
4.5	Restart timer with UF=4, DI=7, LOS=1.
21.4	Verify lockout for timer's II with UF = 11.
23.6	Verify non-lockout for timer's II with UF = 11.

Interlace all timers in approximately 0.3 second intervals.

If the test at 21.4 seconds fails, the timer has not been restarted

(3) run test for each SIS related T_L timer, using DI=3

Time (sec)	Action
0.00	Start timer with UF=4, DI=3, LSS=1.
0.02	Verify lockout to timer's SI with UF = 11.
4.5	Restart timer with UF=5, DI=3, LSS=1.
21.4	Verify lockout for timer's SI with UF = 11.
23.6	Verify non-lockout for timer's SI with UF = 11.

Interlace all timers in approximately 0.3 second intervals.

If the test at 21.4 seconds fails, the timer has not been restarted.

c. Test #3 - Multisite T_L Timer and Lockout: Restart Capability and Sensitivity to Valid Formats (Level 2 and above transponders)

(1) run test for each IIS related T_L timer, using DI=1

Time (sec)	Action
0.00	Start timer with UF=20, DI=1, LOS=1.
0.02	Verify lockout to timer's II with UF = 11.
4.5	Restart timer with UF=21, DI=1, LOS=1.
21.4	Verify lockout for timer's II with UF = 11.
23.6	Verify non-lockout for timer's II with UF = 11.

Interlace all timers in approximately 0.3 second intervals.

If the test at 21.4 seconds fails, the timer has not been restarted.

(2) run test for each IIS related T_L timer, using DI=7

Time (sec)	Action
0.00	Start timer with UF=21, DI=7, LOS=1.
0.02	Verify lockout to timer's II with UF = 11.
4.5	Restart timer with UF=20, DI=7, LOS=1.
21.4	Verify lockout for timer's II with UF = 11.
23.6	Verify non-lockout for timer's II with UF = 11.

Interlace all timers in approximately 0.3 second intervals.

© EUROCAE, 2003

If the test at 21.4 seconds fails, the timer has not been restarted.

(3) run test for each SIS related T_L timer using DI=3

Time (sec)	Action
0.00	Start timer with UF=20, DI=3, LSS=1.
0.02	Verify lockout to timer's SI with UF = 11.
4.5	Restart timer with UF=21, DI=3, LSS=1.
21.4	Verify lockout for timer's SI with UF = 11.
23.6	Verify non-lockout for timer's SI with UF = 11.

Interlace all timers in approximately 0.3-second intervals.

If the test at 21.4 seconds fails, the timer has not been restarted.

d. Test #4 - Broadcast Discrimination related to IIS

(1) All transponders

run test for each IIS related T_L timer, using interrogations with broadcast address FF FF FF {HEX}

Time (sec)	Action
0.00	Start timer with UF=4, DI=1, LOS=1.
0.02	Verify non-lockout to timer's II with UF = 11.
0.04	Start timer with UF=5, DI=1, LOS=1.
0.06	Verify non-lockout to timer's II with UF = 11.

(2) Level 2 and above transponders

run test for each IIS related T_L timer, using interrogations with broadcast address FF FF FF {HEX}

Time (sec)	Action
0.00	Start timer with UF=20, DI=1, LOS=1.
0.02	Verify non-lockout to timer's II with UF = 11.
0.04	Start timer with UF=21, DI=1, LOS=1.
0.06	Verify non-lockout to timer's II with UF = 11.

e. Test #5 - Broadcast Discrimination related to SIS

(1) All transponders

run test for each SIS related T_L timer, using interrogations with broadcast address FF FF FF {HEX}

Time (sec)	Action
0.00	Start timer with UF=4, DI=3, LSS=1.
0.02	Verify non-lockout to timer's SI with UF = 11.
0.04	Start timer with UF=5, DI=3, LSS=1.
0.06	Verify non-lockout to timer's SI with UF = 11.

© EUROCAE, 2003

(2) Level 2 and above transponders

run test for each SIS related T_L timer, using interrogations with broadcast address FF FF FF {HEX}

Time (sec)	Action
0.00	Start timer with UF=20, DI=3, LSS=1.
0.02	Verify non-lockout to timer's SI with UF = 11.
0.04	Start timer with UF=21, DI=3, LSS=1.
0.06	Verify non-lockout to timer's SI with UF = 11.

NOTE: *Any other test-procedure not involving lockout may be run simultaneously with Test #1 as long as the tests do not interfer with each other.*

NOTE: *After Test #1 has been passed, Tests #2, #3, #4 and #5 can be interlaced with the interrogation acceptance test.*

5.5.8.6 PROCEDURE #6 Squitter Verification (Paragraphs 3.20.2.6 and 3.21.2.6)

The squitter transmissions function of transponders cannot be externally disabled. Squitters will occur randomly at approximately one-second intervals during all test procedures.

As a result, squitter transmissions will be noted by the reply receiver and the test controller as unsolicited replies. Software or hardware provisions shall be made in the test setup so that squitter transmissions are recognized as such, and it should be noted that they occur in the specified random manner.

The following is recommended: If an unsolicited reply is detected, the processor shall delay the next scheduled interrogation so that it doesn't overlap the squitter transmissions and remain undetected by the transponder.

When squitter transmissions are detected, their content shall be verified observing the CA, AA and PI fields of the transmissions.

For diversity transponders, it shall be verified that squitters are transmitted alternately from both channels.

For tests of the squitter function, refer to paragraph 5.4.11.2.

5.5.8.7 PROCEDURE #7 FS and VS Protocol/Code Tests

(Paragraph 3.18.4.12~~3.18.4.12~~ - FS code).

(Paragraph 3.18.4.38~~3.18.4.38~~ - VS code).

(Paragraph 3.20.2.7 - protocol).

(Paragraph 3.20.2.11 - interface).

(Figure 3-12 - Flowchart).

This procedure verifies the proper operation of the FS and VS protocols and codes.

5.5.8.7.1 Conditions

Transponder States

A = Alert Register set.

B = T_C timer runs.

C = T_I timer runs.

D = Ground Register set.

Total number of independant states = 16.

© EUROCAE, 2003

Draft change proposal[205] after WG 49 meeting 4

Interrogation Patterns for Level 1 Transponders

UF=4, 5, with RR=0 (2 patterns).

UF=0, (1 pattern).

Interrogation Patterns for All Other Transponders

UF=4, 5, 20, 21 with RR=0 and l6 through 31 (68 patterns).

UF=0, 16 (2 patterns).

Transaction Summary

Level 1 Transponder:	48 transactions.
All Other Transponders:	1120 transactions.

5.5.8.7.2 Required Code Verification Test

Observe that the FS code follows the transponder states as specified in paragraph 3.18.4.12 and verify that VS=1, if and only if the "on-the-ground" input is active.

In particular, the following shall be verified :

a. when the input of the ID function is changed to 7500, 7600, 7700 verify that:

   (1) the alert register is permanently set,

   (2) the FS field value is 2, 3, or 4,

   (3) T_C is not started

   (4) verify that the FS field value changes to a value not equal to 2, 3, or 4 only when a new input of the ID function other than 7500, 7600, 7700 is made.

b. when the input of the ID function is changed to other values than 7500, 7600, 7700 verify that:

   (1) the alert register is set,

   (2) the FS field value is 2, 3, or 4,

   (3) TC is started,

   (3) following TC expiry, verify that the FS field value is not 2, 3, nor 4.

c. when manual or interface input exists for SPI, verify that :

   (1) TI timer is started,

   (2) the FS field value is 4 or 5,

   (3) following TI expiry, verify that the FS field value is neither 4 nor 5.

d. when the "on-the-ground" input is active, verify that :

   (1) the ground register is set,

   (2) the FS field value is 1, 3, 4, or 5.

e. when the "on-the-ground" input is not active, verify that :

   (1) the ground register is not set,

   (2) the FS field value is 0, 2, 4, or 5.

   The transactions required for this test can be interlaced during the procedures required for interface verification or during any other convenient interval. This can be arranged so that no time is lost in waiting for the timers to run out.

5.5.8.7.3 Required Timer Duration Test

Duration of each timer run (T_C and T_I) shall be verified to be 18 ±1.0 seconds by observation of FS code change.

© EUROCAE, 2003

5.5.8.8 PROCEDURE #8 PI (Parity/Identity) Verification (Paragraph 3.20.2.1)

This test procedure verifies the PI field generation.

A separate test sequence is not required.

During the lockout tests, the transponder generates replies to All-Call interrogations and the reply receiver receives the PI field and extracts the interrogator identifier code or surveillance identifier code received by the transponder in the preceding interrogation.

Verify that the extracted code agrees with the IC and CL of the preceding All-Call.

Verify that the extracted code equals 0 if the preceding All-Call was an Mode A/C/S type.

5.5.8.9 PROCEDURE #9 Address Tests

(Paragraph 3.20.2.2~~3.20.2.2~~ - address discrimination)

(Paragraph 3.17.1~~3.17.1~~ - address reporting)

(Paragraphs 3.17.1~~3.17.1~~ and 3.20.2.1~~3.20.2.1~~ c address encoding)

(Paragraph 3.20.2.11 - address interface)

This test procedure verifies that the address set into the address interface of the transponder is actually the address to which the transponder responds, and the address which the transponder reports in DF=11. It is also verified that this address pattern is used in generating the AP field of replies and that the transponder does reply only to this address.

5.5.8.9.1 Pattern Selection

Because more than 16 million addresses are possible, exhaustive testing is not practical. Address test patterns must be chosen so that the most likely failure modes (incorrect wiring of the interface connector, register malfunction, etc.) can be found.

As a minimum the 276 address patterns consisting of two ONEs and 22 ZEROs (Pattern group A) and the 276 patterns having two ZEROs and 22 ONEs (Pattern group B) shall be used for verification.

5.5.8.9.2 Transponder Designs

Design	No. of UFs	Number of Tests
Level 1	3	1656
Level 2	6	3312
All Others	7	3864

5.5.8.9.3 Test Sequence

Set transponder address selector device to each address in pattern group A in turns.

Interrogate with the selected address from pattern group A and observe:

a. Acceptance for all formats.

b. Correct report in AA field of DF=11.

c. Correct encoding of AP in replies.

Interrogate with each address in pattern group B and observe:

- Non-acceptance of all formats.

Set transponder address selector device to each address in pattern group B in turns.

Interrogate with the selected address from pattern group B and observe:

© EUROCAE, 2003

(1) Acceptance for all formats.

(2) Correct report in AA field of DF=11.

(3) Correct encoding of AP in replies.

5.5.8.10 PROCEDURE #10 Altitude Report Tests

(Paragraph 3.5.6~~3.5.6~~ - in Mode A/C/S)

(Paragraph 3.17.1~~3.17.1~~ b - Pressure Altitude)

(Paragraph 3.20.2.11 - interface)

This test procedure verifies that the altitude code as it is set into the interface, appears correctly in both Mode C and Mode S replies.

5.5.8.10.1 Pattern Selection

Test patterns are chosen so that the most likely failure modes (incorrect wiring of the interface connector, register malfunction, etc.) can be found. The following systematic test pattern generation is recommended:

Choose all patterns consisting of two ONEs and the remainder ZEROs and all patterns consisting of two ZEROs and the remainder ONEs. These patterns, together with the all-ZEROs pattern, shall be used for verification.

5.5.8.10.2 Transponder Designs

In Mode C replies only 11 of the possible 13 pulses are used; X and D1 are not part of the code. Additionally, some transponders may not need the capability to transmit the D2 and/or D4 pulses which start at 62,000 and 30,750 ft respectively. At the other extreme, a transponder with the capability to report altitude in meters must have the capability to transmit ONEs in all 13 bits of the AC field. If the maximum number of bits in the altitude code is n, the total number of patterns required by the above pattern selection recommendation is n(n-1)+1.

Transponders may report altitude in up to five reply formats only: Mode A/C Mode S, DF=0,4, and DF=20, and if so equipped, in DF=16. The total number of replies that should be verified for a given transponder design is the product of the number of altitude reply formats and the number of recommended test patterns for that transponder. This number ranges from a minimum of 273 replies tested for a level 1 transponder with 10 altitude code bits to a maximum of 785 replies tested for a data link transponder with 13 altitude code bits.

5.5.8.10.3 Test Sequence

Disconnect the interface input for altitude code or do not supply altitude information if the interface is common with other data systems. Interrogate so that all possible altitude reporting downlink formats are generated in replies. For Mode C, verify that only the bracket pulses appear and that bits 20 through 32 of Mode S replies are ZEROs.

Connect the code source to the interface input, generate a code consisting of all ZEROs and verify as above.

Apply all test patterns as described above at the interface and verify that they appear correctly in all formats containing an altitude code.

5.5.8.11 PROCEDURE #11 4096 Code Tests

(Paragraph 3.5.6~~3.5.6~~)

(Paragraph 3.20.2.11 - interface, electrical)

(Paragraph 2.5 - interface, manual)

This test verifies that the 4096 code set by the pilot appears correctly in both Mode A/C and Mode S replies. DF=5 and 21.

© EUROCAE, 2003

Draft change proposal[208] after WG 49 meeting 4

5.5.8.11.1 Procedure Selection

For all installations and transponder designs, the initial input of the code is set manually by the pilot. The code selector device may or may not be an integral part of the transponder. If an electrical input exists, it may be dedicated to this function alone, or it may be common with other data systems. Any procedure selected ultimately must be traceable to the manual input mode, even if the pilot's selector device is provided by another manufacturer.

5.5.8.11.2 Pattern Selection

Only 12 of the possible 13 pulses or bit positions are used; Bit 26 in DF=5 & 21 is not part of the code. Test patterns are chosen so that the most likely failure modes (incorrect wiring in connectors, cables, code switches or register malfunction) are likely to be found. The following systematic test pattern generation is required :

There exist 66 code patterns consisting of two ONEs and 10 ZEROs, while another 66 patterns have two ZEROs and 10 ONEs. These 132 patterns are used for verification because they assure that a pair of connections is not defective. (A sequence of randomly chosen patterns is not suitable because there are many incorrect wiring possibilities and a random test can fail to detect errors).

The correlation between the required test pattern and the actual code numbers as seen by the pilot follows:

4096 Codes That Produce Two ONEs and 10 ZEROs:

0003	0202	1400
0005	0204	2001
0006	0210	2002
0011	0220	2004
0012	0240	2010
0014	0300	2020
0021	0401	2040
0022	0402	2100
0024	0404	2200
0030	0410	2400
0041	0420	3000
0042	0440	4001
0044	0500	4002
0050	0600	4004
0060	1001	4010
0101	1002	4020
0102	1004	4040
0104	1010	4100
0110	1020	4200
0120	1040	4400
0140	1100	5000
0201	1200	6000

© EUROCAE, 2003

Draft change proposal[209] after WG 49 meeting 4

4096 Codes That Produce Two ZEROs and 10 ONEs:

1777	6577	7576
2777	6677	7637
3377	6737	7657
3577	6757	7667
3677	6767	7673
3737	6773	7675
3757	6775	7676
3767	6776	7717
3773	7177	7727
3775	7277	7733
3776	7337	7735
4777	7357	7736
5377	7367	7747
5577	7373	7753
5677	7375	7755
5737	7376	7756
5757	7477	7763
5767	7573	7765
5773	7557	7766
5775	7567	7771
5776	7573	7772
6377	7575	7774

5.5.8.11.3 Transponder Designs

LEVEL 1 transponder reports the 4096 code in Mode A replies and in DF=5; 264 replies must be verified.

All other transponders report the 4096 code in Mode A replies and in DF=5, 21; 396 replies must be verified.

5.5.8.11.4 Test Sequence

Enter all test patterns manually or electrically and verify that they are correct in both Mode A and Mode S replies.

If the test patterns are entered electrically, a corresponding test procedure must be devised to verify the connection between 4096 codes and the electrical input to the transponder. This should include cables and connectors.

If the electrical input simulates an on-board data distribution system, the verification procedures for that system govern the above verification.

NOTE: *A manual insertion of the 4096 codes can be prompted by an interactive readout from the test controller to speed up the procedure.*

5.5.8.12 PROCEDURE #12 RI, Acquisition and Maximum Cruising True Airspeed

(Paragraph 3.17.1~~3.17.1~~ - insertion)

(Paragraph 3.18.4.30~~3.18.4.30~~ - code)

(Paragraph 3.20.2.11 - interface)

(Paragraph 3.23.1.5~~3.23.1.5~~ - Air to air reply information)

This test procedure verifies that the maximum cruising true airspeed code as it is set at the fixed direct data interface appears correctly in replies and that it appears only when the interrogation shows AQ=1.

© EUROCAE, 2003

5.5.8.12.1 Pattern Selection

Of the 4 bits of the RI field, one (14) is controlled by the content of the received interrogation. The remaining three (15-17) show the maximum cruising true airspeed code from the fixed direct data interface when bit 14 is ONE, and input from a variable data interface when bit 14 is ZERO. This procedure concerns only the fixed data interface; RI action for the variable data interface is verified in Procedure #7.

To be verified are code 0 and codes 8 through 14 of paragraph 3.18.4.30~~3.18.4.30~~.

5.5.8.12.2 Transponder Designs

The maximum cruising true airspeed codes range to 1200 knots. Bit 15, if ONE, characterizes all maximum cruising true airspeeds above 300 knots. Transponders may not have inputs for maximum cruising true airspeeds above that limit.

All transponder requires interrogations with UF=0, AQ=0, 1 and RL=0 (2 interrogation patterns).

All other transponders with ACAS compatible interface require interrogations with UF=0, 16, AQ=0, 1 and RL=0, 1 (8 interrogation patterns).

5.5.8.12.3 Test Sequence

For each maximum cruising true airspeed code (for which the transponder is equipped), interrogate with the required number of patterns and verify that the RI field shows the code according to paragraphs 3.18.4.30~~3.18.4.30~~ or 3.23.1.5~~3.23.1.5~~, as appropriate.

NOTE: *Since some transponders may enter the maximum cruising true airspeed code through a common on-board data system, a corresponding test procedure must be used.*

5.5.8.13 PROCEDURE #13 PR, Probability of Reply, Stochastic Acquisition

(Paragraph 3.18.4.28~~3.18.4.28~~ - PR code)

(Paragraph 3.20.2.2~~3.20.2.2~~ - protocol)

This test procedure verifies that the probability-of-reply decision for All-Call interrogations is carried out correctly.

5.5.8.13.1 Principle of Test Procedure

A large number of Mode S All-Call interrogations (UF=11) are made for each of the PR codes. For each PR code, a specified fraction of the interrogations will result in a reply. A minimum of one hundred interrogations provide a valid sample for active PR codes while a lesser number are adequate for other codes.

5.5.8.13.2 Transponder Designs

This test applies to all transponder designs.

© EUROCAE, 2003

5.5.8.13.3 Test Sequences

a. Transponder Not Locked Out to All-Calls

Interrogate with UF=11 according to the summary below and verify the number of replies received as indicated:

Number of		**Replies**	
Interrogations	**PR=**	**No Less Than**	**No More Than**
100	0	99	100
100	I	35	65
100	2	18	32
100	3	9	15
100	4	4	8
20	5		0
20	6		0
20	7		0
100	8	99	100
100	9	35	65
100	10	18	32
100	11	9	15
100	12	4	8
20	13		0
20	14		0
20	15		0

b. Transponder Locked Out to All-Calls

The transponder can be in 79 different specific lockout states as determined by the running of one of the 79 timers. The following test sequence must be repeated for each of the lockout states:

(1) Interrogate so that the transponder is locked out non-selectively or selectively as required.

(2) Interrogate with UF=11, containing IC and CL corresponding to the existing lockout state, and verify the number of replies according to the summary below:

Number of		**Replies**	
Interrogations	**PR=**	**No Less Than**	**No More Than**
20	0	0	0
20	1	0	0
20	2	0	0
20	3	0	0
20	4	0	0
20	5	0	0
20	6	0	0
20	7	0	0
100	8	99	100
100	9	35	65
100	10	18	32
100	11	9	15
100	12	4	8
20	13	0	0
20	14	0	0
20	15	0	0

© EUROCAE, 2003

5.5.8.13.4 Squitter Precaution

Because squitter transmissions, which have the same format, can distort the results of this test, precautions must be taken. Therefore, the test should be conducted during the 800-millisecond periods following squitter (procedure 6).

N0TE: *It is not necessary that this test consist of an uninterrupted sequence of All-Calls. The interrogations can be dispersed throughout the overall test procedure whenever convenient.*

5.5.8.14 PROCEDURE #14 No Test foreseen

This procedure is deliberately left blank.

5.5.8.15 PROCEDURE #15 Comm-A, Interface and Information Content

(Paragraph 3.21.1.10~~3.21.1.10~~ - protocol)

(Paragraph 3.17.3~~3.17.3~~ - content)

(Paragraph 3.4.2~~3.4.2~~ - acceptance rate)

(Paragraph 3.21.1.1~~3.21.1.1~~ - broadcast)

This procedure verifies that the information contained in Comm-A interrogations passes out of the transponder within the specified time interval and that such information correctly replicates the received transmission.

In this test, the equipment must monitor both the reply content via the reply received, and the uplink interface output via the interface adaptor.

Interrogation Patterns:

UF = 20, 21.
RR = 0.
MA = 3080 different patterns, half containing two ONEs, half containing two ZEROs.
Address: Use the broadcast address for 5% of the interrogations

Total number of interrogations if UF=20 and UF=21 are alternated: 3080.

5.5.8.15.1 Test Sequence A

Interrogate at the normal (50/sec) rate, alternating UF=20 with UF=21 while varying RR=0 to 15, PC=0 to 7, DI=0 to 7 and using SD=random (insert the 3080 different patterns into MA). Verify that the uplink content, as transmitted, appears at the interface in the same order as transmitted.

NOTE: *If the interface is of the storage design, the information may be delayed; coordination with the interface design is required.*

5.5.8.15.2 Test Subsequence

Within the test sequence above, make 100 interrogations in 2.0 seconds. Schedule bursts and timing are as follows:

© EUROCAE, 2003

Start of Burst (ms) Interrogations	Number of (per sec)	Interrogation Rate
0	4	2500
80	4	2500
160	8	320
320	8	320
480	8	320
640	l8	180
1000	4	2500
1080	4	2500
1160	8	320
1320	8	320
1480	8	320
1640	18	180

For the non-storage design, verify compliance with paragraph 3.17.3.

For the storage design, verify that within two seconds of this subsequence all uplink content appears in proper order as transmitted at the interface terminals.

5.5.8.15.3 Test Sequence B (Buffer Full)

This test applies only if a storage design has been used.

Within one second, generate interrogation bursts as shown below. Use short replies to remain within the reply capability of the transponder.

Start of Burst (ms) Interrogations	Number of (per sec)	Interrogation Rate
0	4	2500
80	4	2500
160	8	320
320	8	320
480	8	320
640	18	180

© EUROCAE, 2003

750	16	180

NOTE: *This sequence is chosen so that the minimum data transfer rate of a storage type interface is exceeded.*

One second after the first burst, verify that the content of at least the first 50 interrogations has appeared at the interface and that the transponder has not generated a reply to those interrogations whose content has not appeared at the interface.

5.5.8.16 PROCEDURE #16 Broadcast All-Call Formats

(Paragraph 3.21.1.11 - Broadcast)

The broadcast function is verified as part of Procedure #15. A negative test must be conducted to verify that no data is transfered across the interface when short formats are used.

Patterns and Sequence

Interrogate with UF=0, 4, 5 and a broadcast address. Verify that no information transfer occurs at uplink interfaces as a result of these interrogations.

Interrogate with UF=11. Verify that no information transfer occurs at uplink interfaces as a result of this interrogation.

5.5.8.17 PROCEDURE #17 Downlink Interface, DF = 0, 16

(Paragraph 3.17.1 a and b - interface)

(Paragraph 3.21.1.16~~3.21.1.16~~ - protocol)

(Paragraph 3.18.4.23 - MV)

This test procedure verifies that bit insertion into the first 32-bit positions of Mode S replies is possible and is carried out without disturbing established fields or protocols.

This test procedure also verifies that bit patterns inserted into the MV field of DF=16 are transmitted as inserted.

5.5.8.17.1 Transponder Design

The downlink interface for DF=0 and DF=16 can exist as a separate port or as one direction of a bidirectional un-buffered (real time) port. It can also exist as an interface accepting only the bit insertion for DF=0 (short reply).

All data link transponders use DF=0 with DF=16 optional.

NOTE: *In ACAS installations, it is possible that a separate interface, according to paragraph 3.21.1.16~~3.21.1.16~~, exists for UF=DF=0, 16. Such an interface may not be accessible if ACAS and transponder functions are integrated. In such circumstances, the test procedures for ACAS shall govern.*

5.5.8.17.2 Patterns for DF=0 and optional DF=16

a. Unconditional Insertion

The locations are:

Bits 9, 10, 11 : a total of 3 bits

Interface patterns:

There are 8 possible unconditional interface patterns to be verified based on these 3 bits.

Interrogation patterns:

UF=0, RL=0, AQ=1, DS = 0.

UF=16, RL=1, AQ=1.

© EUROCAE, 2003

UF=0, RL = 1, AQ = 1, DS any value other than 0

b. Conditional Insertion

The locations are:

Bits 15, 16, I7: these can be inserted only if the interrogation contained AQ=0.

Interface patterns:

There are 8 possible conditional interface patterns to be verified based on these 3 bits.

Interrogation patterns:

UF=0, RL=0, AQ=0, DS = 0.

UF=16, RL=1, AQ=0.

UF=0, RL=1, AQ=0, DS any value other than 0.

NOTE: *The interrogation that includes a DS value other than zero will test that the reply bits are not affected by ACAS crosslink protocol. The data content inserted in the ground-initiated Comm-B registers being tested should not be all zeroes or all ones.*

© EUROCAE, 2003

5.5.8.17.3 Positive Test Sequences for DF=0 and optional DF=16

a. Unconditional Insertion

For each interrogation pattern, generate 8 interrogations while sequencing through the interface patterns. Verify that the replies contain bits as inserted.

b. Conditional Insertion

For each interrogation pattern, generate 8 interrogations while sequencing through all 8 possible interface patterns. Verify that the replies contain bits as inserted.

5.5.8.17.4 Negative Test Sequence for DF=0 and optional DF=16

Disconnect the interface input for the airspeed report or enter code 0 for airspeed. Insert ONEs for bits 14 through 17 at the downlink interface and interrogate with UF=0, RL=0, AQ=1 and with UF=16, RL=1, AQ=1.

Verify that bits 15 through 17 of the replies are ZEROs.

5.5.8.17.5 MV Test Sequence for All Data Link Transponders

This test sequence includes all unconditionally inserted bits in addition to the bit patterns of the MV field.

Interface Patterns and Test Sequence

Using bits 9 through 11 and 41 through 58, generate 420 interface patterns, 210 containing two ONEs and 210 containing two ZEROs.

Interrogate to extract replies of the inserted patterns and verify that they are transmitted as inserted. In the case of the interrogation with DS other than zero, verify that the MV field contains the data of the ground-initiated Comm-B register corresponding to the DS value in the interrogation.

NOTE: *The MV field will only contain the requested Comm-B data if the transponder is ACAS Crosslink capable and the requested register is supported by the transponder.*

5.5.8.18 PROCEDURE #18 Comm-B Protocol

(Paragraphs 3.21.1.12 through 3.21.1.13).

(Paragraph 3.21.2.3~~3.21.2.3~~).

(Paragraph 3.21.2.1~~3.21.2.1~~ b - UM).

Flowchart : Figure 3-18

This test procedure verifies that the Comm-B protocol is carried out correctly.

The test procedure follows the notation of transponder states and of interrogation patterns as shown in the flowchart.

5.5.8.18.1 Transponder States

The transponder states are defined by the combinations of conditions E through I, where:

E = B-register set: B-bit inserted.

F = T-register set: Message has been transmitted.

G = Timer runs: For multisite only.

H = IIS is correct (in next interrogation).

I = Next message waiting.

There are seven possible states as shown below:

© EUROCAE, 2003

#	E	F	G	H	I	
1	0	0	0	0	0	No B-bit, others impossible or inconsequential.
2	1	1	0	0	0	Message extraction, not multisite protocol
3	1	1	0	0	1	As above, next message waiting.
4	1	1	1	0	0	In multisite, interrogation with wrong IIS can not close out.
5	1	1	1	0	1	As above with next message waiting.
6	1	1	1	1	0	In multisite, interrogation with correct IIS can close out.
7	1	1	1	1	1	As above, but after closeout B-bit will show again.

States 4 through 7 must be used with all 15 IIS codes.

Total: 4 x 15 + 3 = 63 transponder states to be used.

5.5.8.18.2 Interrogation Patterns

#	A	B	C	D	K	L	
1	0	0	0	0	0	0	Ordinary interrogation, asking for short reply.
2	0	0	0	0	0	1	Ground-initiated Comm-B extraction (AIS etc) .
3	0	0	0	0	1	0	Air-initiated Comm-B extraction, not multisite.
4	0	1	0	0	0	0	Multisite, but not for Comm-B.
5	0	1	0	0	0	1	Ground-initiated Comm-B extraction, multisite not for Comm-B
6	0	1	0	0	1	0	Air-initiated Comm-B extraction, multisite not for Comm-B.
7	0	1	0	1	0	0	Multisite closeout for Comm-B.
8	0	1	0	1	0	1	Multisite closeout for Comm-B and ground initiated Comm-B extraction.
9	0	1	0	1	1	0	Multisite closeout for Comm-B and attempt to extract a possible message still waiting at the air-initiation interface.
10	0	1	1	0	0	0	Multisite reservation with wrong RR, see next line.
11	0	1	1	0	0	1	Attempt at multisite reservation with wrong RR. Transponder must not accept reservation.
12	0	1	1	0	1	0	Multisite reservation, correct.
13	1	0	0	0	0	0	Non-multisite cancellation.
14	1	0	0	0	0	1	Non-multisite cancellation and ground initiated Comm-B extraction.
15	1	0	0	0	1	0	Non-multisite cancellation and attempt to extract possible message still waiting at the air-initiation interface.
16	1	1	0	0	0	0	Non-multisite cancellation, multisite not for Comm-B.
17	1	1	0	0	0	1	Non-multisite cancellation with ground initiated Comm-B extraction, multisite not for Comm-B.
18	1	1	0	0	1	0	Non-multisite cancellation and attempt to extract possible message still waiting at air-initiation interface, multisite not for Comm-B.
19	1	1	0	1	0	0	Non-multisite cancellation and multisite closeout, cancel non-multisite message and close out multisite message if IIS is correct.
20	1	1	0	1	0	1	Non-multisite cancellation and multisite closeout and ground-initiated Comm-B extraction. Will cancel non-multisite message and will closeout multisite message if IIS is correct. Will extract Comm-B.
21	1	1	0	1	0	1	Same as above, no ground-initiated extraction.
22	1	1	1	0	0	0	Non-multisite cancellation and reservation with wrong RR. Cancel but make no reservation.
23	1	1	1	0	0	1	Non-multisite cancellation and reservation with wrong RR. Cancel but make no reservation.
24	1	1	1	0	1	0	Non-multisite cancellation and reservation. Cancel and make reservation.

© EUROCAE, 2003

A means	PC=4:	Cancellation.
B means	DI=1:	Multisite in effect.
C means	MBS=1:	Multisite reservation.
D means	MBS=2:	Multisite closeout.
K means	RR=16 with either DI=1 or DI=7 and RRS=0:	Air-initiated MB extraction.
L means	RR larger than 15 but not according to code K above.	Ground MB extraction.

The symbols A, B, C, etc., correspond to the symbols on the flowchart (Figure 3-18).

Interrogation patterns 4 through 12 and 16 through 24 of the 24 patterns shown are IIS-sensitive; each of them shall be used with each of the 16 IIS codes.

Interrogation patterns 10, 11, 22, 23 are forbidden to the ground interrogator. They shall be used to verify that the transponder makes reservations only when the reservation is accompanied by extraction of the message.

There are 18 x 16 + 6 = 294 interrogation patterns to be used.

5.5.8.18.3 Test Sequence

All 18,522 combinations of the 63 transponder states and 294 valid interrogation patterns shall be used.

Interrogate so that the transponder enters a given state and then use all interrogation patterns that will not change the state, followed by patterns that will. Repeat with the now acquired state. This shall be done until all 18,522 combinations have been exhausted. Some combinations shall be repeated because more than one interrogation pattern can change the state.

To "set the B-bit", use DR=1 and DR=3 commands alternately during the test sequence.

a. Required Negative Tests

Concurrent tests are part of the sequence above. If PC is not required to be 4, use all other codes. If DI is not required to be 1, use all other codes. If MBS is not required to be 1 or 2, use codes 3 and 4. If RR is required to be less than 16, use all codes less than 16.

Inserted tests shall be interspersed within the sequence.

Insert interrogations of formats other than UF=4, 5, 20, 21 and verify that they have no effect on the protocol.

Such interrogations should constitute one percent of the total number of interrogations used.

The interrogation patterns 2, 5, 8, 11, 14, 17, 20 and 23 shall include, when RR=16 is used, the combinations of RR=16 with DI=7 and DI=3 and RRS Codes 1 through 15. It shall be verified that these combinations do not cause the air-initiated Comm-B message to be transmitted.

b. UM Field Verification

During the test sequence when a multisite reservation is made (column C), the resulting reply will contain IIS and IDS in the UM field according to paragraph 3.21.2.1 b. Verify that these patterns are correct.

© EUROCAE, 2003

c. Timer Duration and Automatic Closeout Test

Arrange the sequence so that the timer runs out occasionally. Verify timer duration and closeout.

d. Simultaneous Tests

While the transponder is undergoing the verification of the B-protocol, the number of interrogations and replies can be used to make tests for interface action, message content, etc. Such tests are described in Procedures #19 through #23.

5.5.8.19 PROCEDURE #18A - Enhanced Comm-B Protocol

If the transponder adheres to the enhanced air-initiated Comm-B protocol as described in subparagraph 3.21.5.1, the following test procedures shall verify that the enhanced protocol is carried out correctly by the transponder.

The following tests verify that:

a. The transponder will properly carry out the Comm-B protocol and will operate with non multisite interrogators, interrogators in multisite configuration and interrogators that will take advantage of the enhanced protocol and extract B messages without making Comm-B reservations.

b. The modified Comm-B protocol test will verify that the transponder can properly carry out the enhanced Comm-B protocol, handling 16 independent B timers, one for each II and up to 16 concurrent Comm-B messages waiting indications to ground interrogators.

5.5.8.19.1 Basic Procedures:

The transponder shall be tested according to the guidelines stipulated in procedure 18 with the following additions and/or modifications:

a. Transponder conditions E and F are defined for non multisite and IIS values 1 - 15. The transponder condition G is defined for IIS values 1 - 15. Condition H is no longer a necessary condition since the transponder can have 15 concurrent reservations.

b. Procedure 18 is expanded to include additional combinations of conditions E, F and G. For current transponder state 1, produce 15 additional states with a Comm-B message not waiting for II = 1 - 15. As the II varies, vary the number of other Comm-B messages waiting for the remaining II values from 0 - 15. States 2 and 3 must be similarly expanded except these states stipulate a Comm-B message waiting as II varies from 0 - 15. The number of Comm-B messages waiting concurrently with the Comm-B message for the II under test is to vary from 0 - 15. It should be noted that state changes from interrogations will be more extensive with the enhanced protocol and that proper setup is required to produce the required transponder states. It is necessary to produce a Comm- B message waiting for the proper IIS by input of directed Comm-Bs to the transponder or a Comm-B message for II of 0 followed by the extraction by the necessary IIS. Verification of proper transponder state requires multiple interrogations to extract the transponder state for each IIS. An air initiated Comm-B message which is extracted by a non zero IIS potentially changes all 16 Comm-B message states. Those interrogation patterns used to close out a Comm-B message for a given IIS must insure that the proper message for the given IIS is closed out. The reply data for Comm-B messages shall be verified. Each of the interrogation patterns 1 through 24 inclusive are now IIS sensitive and must be run for each IIS value.

c. Additionally, verify for each IIS that upon B timer expiration, the message for that IIS is indicated as available to all other available II codes. Repeat the procedures defined above for 2, 3 and 4 segment Comm-Bs and insure that the proper data is indicated in the replies.

© EUROCAE, 2003

Draft change proposal[220] after WG 49 meeting 4

UM Field Verification

In all cases, verify that the transponder reports the proper state in the UM field and the report is for the IIS contained in the interrogation pattern.

5.5.8.19.2 Additional Tests

The Transponder can be in one of the following II sensitive states:

#	E	F	G	I	STATE
1	0	0	0	0	NULL
2	1	1	0	0	Msg being extracted, not multisite, ready to closeout
3	1	1	0	1	Msg being extracted, not multisite, ready to closeout and process next message
4	1	1	1	0	Msg being extracted, ready to closeout
5	1	1	1	1	Msg being extracted, ready to closeout and process next message
6	1	0	0	0	Msg waiting for an IIS
7	1	0	0	1	2 or more msg waiting for an IIS
8	0	0	1	0	Broadcast msg waiting

a. Test 1: correct handling of multisite message vs. multisite directed message

Input a multisite directed message for IIS = 15. Input a multisite message. *Verify that transponder state is #6 for all IIS.*

Send interrogation pattern #12 for IIS = 15. Verify that transponder state is #4 for IIS = 15 and unchanged for other IIS.

Send interrogation pattern #12 for IIS = 1.Verify that transponder state is #4 for IIS = 1 and 15 and #1 for other IIS.

Send interrogation pattern #12 for IIS = 2. Verify that transponder state remain unchanged for all IIS.

Send interrogation pattern #7 for IIS = 15. Verify that transponder state is #1 for IIS = 15 and unchanged for other IIS.

Send interrogation pattern #7 for IIS = 1. Verify that transponder state is #1 for IIS = 1, #6 for other IIS (including 15).

b. Test 2: parallel delivery of 15 multisite directed messages and correct process when a next message is waiting for a particular IIS.

Input a multisite directed message for all IIS. V*erify that transponder state is #6 for all IIS.*

Send interrogation pattern #12 for IIS = 1. Verify that transponder state is #4 for IIS = 1 and unchanged for other IIS and that the correct message is included in the reply.

Send interrogation pattern #12 for IIS = 2. Verify that transponder state is #4 for IIS = 2 and unchanged for other IIS and that the correct message is included in the reply.

Repeat the above for IIS = 3 to 15 (state should then be #4 for all IIS). Input the next multisite directed message for IIS = 1. V*erify that transponder state is #5 for IIS = 1 and unchanged for other IIS.*

Send interrogation pattern #24 for IIS = 1. Verify that transponder state is #4 for IIS = 1 and unchanged for other IIS and that the correct message (the second one) is included in the reply.

Send interrogation pattern #7 for IIS = 1 to 15. Verify that the transponder state is #1 for IIS = 2 to 15.

© EUROCAE, 2003

c. Test 3: 2 multisite directed messages waiting for a same IIS (test of state #7)

Input 2 multisite directed message for IIS = 1. Input a multisite message. Verify that transponder state is #7 for IIS = 1, #6 for other IIS.

Send interrogation pattern #12 for IIS = 1. Verify that transponder state is #5 for IIS = 1 and unchanged for other IIS and that the correct message is included in the reply.

Send interrogation pattern #24 for IIS = 1. Verify that transponder state is #4 and unchanged for other IIS and that the correct message is included in the reply.

Send interrogation pattern #7 for IIS = 1. Verify that transponder state is #6 for all IIS (including IIS = 1).

All these tests should be run with all combination of IIS values.

5.5.8.20 PROCEDURE #19 AIS Flight Identification, Protocol and Interface

(Paragraph 3.18.4.18~~3.18.4.18~~ - BDS)

(Paragraph 3.18.4.32- RR)

(Paragraph 3.21.1.13 - protocol)

(Paragraph 3.21.1.13 - AIS field)

(Paragraph 3.21.1.17 - interface)

This test procedure verifies that the transponder, given the correct interrogation, reports its identification in the MB field of a Comm-B reply. Also verified is the correct function of the interface used to insert the identifying code.

5.5.8.20.1 Interface

The test patterns and sequences are independent of the interface design.

5.5.8.20.2 Interface Patterns

AIS is a 48-bit subfield, using bits 41 to 88. A total of 1128 patterns containing two ONEs and 1128 patterns containing two ZEROs shall be used for interface verification.

5.5.8.20.3 Interrogation Patterns and Test Sequence

If during the B-protocol test procedure (Procedure #18), an interrogation pattern is used that requires RR to be larger than 16 (Column L), use RR=18 as often as is required to verify the 2256 test patterns for AIS. Also verify that the BDS code within the MB message field is set to BDS1=2, BDS2 = 0 in each reply.

5.5.8.21 PROCEDURE #20 Basic/Extended Capability Report

(Paragraph 3.18.4.18~~3.18.4.18~~ - BDS)

(Paragraph 3.18.4.32- RR)

(Paragraph 3.21.1.12 a - extended data source)

(Paragraphs 3.21.1.12 d through 3.21.1.12 f - protocol)

(Paragraph 3.21.1.12~~3.21.1.12~~ e - updating)

(Paragraph 3.21.1.17~~3.21.1.17~~ - interface)

(Paragraph 3.23.1.2~~3.23.1.2~~ b)

This test procedure verifies that the transponder, given the correct interrogation, reports its capability in the MB field of a Comm-B reply. Also verified is the correct functioning of the interface used (if any) and the updating function if it is part of the transponder.

© EUROCAE, 2003

5.5.8.21.1 Interface

The source that generates the content of the capability report may be internal or external to the transponder. If internal, only the correctness of the report can be verified, if external and not connected to the transponder, the interface action must be verified.

NOTE: *If an external source is used, verify that the capability report is correct and that there is not a continuous broadcast of the capabiity report due to interference between the internal and external updating of the report.*

5.5.8.21.2 Interface Patterns

The basic capability report occupies the last 48 bits of the MB message field for which the BDS code is set to BDS1=1, BDS2 = 0. Additional capability reports occupy the last 48 bits of the MB message field for which the BDS code is set to BDS1=1, BDS2=1, 2...6, if required.

A total of 2256 interface verification patterns (Procedure #19) must be used if an external report source is used.

5.5.8.21.3 Interrogation Patterns

If during the B-protocol test procedure (Procedure #18) an interrogation pattern is used that requires RR to be larger than 16 (Column L), use RR=17 as often as required to carry out the extended capability report verification.

5.5.8.21.4 Test Sequence for Internal Report Source

Use RR=17 and, if required, RR=17, DI=7 and RRS = required BDS2 to extract the report.

Verify that the content of the report is correct.

Change the capability and observe that the transponder gives a broadcast Comm-B request. Verify the content of the new report.

5.5.8.22 PROCEDURE #21 Directed Comm-B

(Paragraph 3.21.1.12 - protocol)

(Paragraph 3.17.3 - interface (see note))

This test procedure verifies that multisite directed Comm-B transmissions are carried out correctly by the transponder.

5.5.8.22.1 Transponder Design

The command to the transponder, that an air-initiated Comm-B shall be directed to a known ground interrogator, originates in a peripheral device. The transponder shall recognize such a command and may be designed to accept it in one of two ways.

One possible design operates as follows: Regardless of the transponder state, the interface inserts a downlink pattern containing DR=1 (the B-bit), IIS (the UM code of the desired destination), and IDS (the UM Comm-B reservation code). Usually, the transponder would pass through the IIS and IDS codes without further examination. For this function, however, both are sensed so that, as soon as the T_{RB}-timer is found not to be running, this pattern can be used for a routine surveillance or communication reply. The protocol sequence as tested in Procedure #18 then takes over and completes the transaction cycle.

Another design would provide for a separate dedicated interface which may accept only the desired destination or may be designed to take all of the directed communication.

The interface adaptor used in the test setup shall conform to the design of the transponder to be tested.

© EUROCAE, 2003

5.5.8.22.2 Interface Patterns of Test Sequence

During the Comm-B protocol test procedure (Procedure #18), use the interface pattern as described above or enter into the special interface the patterns necessary to cause a directed Comm-B initiation.

Use IIS codes from 1 to 15 (a total of 15 codes) and reply formats DF=4, 5, 20, 21. Ensure that data patterns include, within the first 8 bits of the MB field, values corresponding to BDS codes 17,18 and 19

Verify that the pattern transmitted by the transponder corresponds to the pattern inserted. Verify that MB message buffers corresponding to BDS codes 17,18,19 are not corrupted by this directed Comm-B.

Verify that this directed Comm-B has not interrupted another existing reservation condition. If the transponder has implemented the enhanced multisite Comm-B protocol. verify that if an air-initiated message has been extracted by a given non zero IIS and the transponder is currently reserved for the IIS extracting it, that a directed Comm-B message to this IIS is queued and made available subsequent to the closeout of the B message to this IIS.

Verification that this Comm-B has been extracted by the assigned interrogator is included in Procedure #18 and need not be repeated.

5.5.8.23 PROCEDURE #21A Comm-B Broadcast

(Paragraph 3.21.1.12 c protocol)

5.5.8.23.1 Test Procedure

NOTE 1: *The command to the transponder that a Comm-B broadcast message shall be sent originates in a peripheral device or in the device that holds the extended capability report.*

NOTE 2: *The Comm-B broadcast does not affect the existing Comm-B protocol, air or ground initiated. The existing test procedures remain unchanged.*

NOTE 3: *Verification of interface patterns is already part of the Comm-B test procedures and need not be repeated for the Comm-B Broadcast.*

This test procedure verifies that the DR code command and the MB field of the Comm-B broadcast protocol is carried out correctly.

a. <u>STEP 1 - General Broadcast Protocol Test</u>

During the Comm-B protocol test procedure (Procedure #18) insert the appropriate DR Code command and the MB field of the Comm-B broadcast into the transponder.

Verify that:

(1) The transponder can correctly show the DR codes 4, 5, 6, 7 when NO air initiated Comm B is in progress and that it cannot show DR codes 4, 5, 6, 7 when an air initiated Comm B is in progress.

(2) The Comm-B broadcast message can be extracted by the interrogator for 18 ±1 seconds.

(3) The Comm-B broadcast annunciation (DR=4, 5, 6, or 7) and the Comm-B broadcast MB field are interrupted by an air-initiated Comm-B and reappear when that transaction is concluded. For transponders implementing the enhanced air initiated Comm-B protocol, the transponder will be independently interrupted by up to 16 Comm-B messages that are assigned to each II code. After the Comm-B is concluded for each II, the Comm-B broadcast is again available to that interrogator. Verify that the next waiting broadcast message is not announced to any interrogators until the current broadcast message has timed out.

© EUROCAE, 2003

(4) After interruption another 18 ±1 seconds of broadcast time is available to the interrogator. For transponders implementing the enhanced air-initiated Comm-B protocol, the transponder will be independently interrupted by up to 16 Comm-B messages that are assigned to each II code. After interruption, another 18 ± 1 seconds of broadcast time is available for each II.

(5) A subsequent and different Comm-B broadcast message is announced with the alternate DR code and that this DR code also follows the verifications above. For transponders implementing the enhanced air-initiated Comm-B protocol, the transponder will be independently interrupted by up to 16 Comm-B messages that are assigned to each II code. The subsequent Comm-B broadcast is announced only after each Comm-B is broadcast timer has expired for all II codes.

b. STEP 2 - Transponder Initiated Broadcast

(1) enter an AIS Flight Identification into the transponder.

Verify that a broadcast is automatically initiated by the transponder.

Extract the broadcast and verify the correct flight ID.

Wait 20 seconds to allow the broadcast timer to time out and enter the same AIS value again.

Verify that no new broadcast is initiated by the transponder.

Repeat the test with a different AIS flight identification.

(2) enter a datalink capability report into the transponder.

Verify that a broadcast is automatically initiated by the transponder.

Extract the broadcast and verify the correct datalink capability report

Wait 20 seconds to allow the broadcast timer to time out and enter the same datalink capability report again.

Verify that no new broadcast is initiated by the transponder.

Repeat the test with a different datalink capability report.

5.5.8.24 PROCEDURE #22 Downlink Interface, Storage Design, Buffer Rate

(Paragraph 3.17.3 - buffer rate)

(Paragraph 3.4.2 - data rate)

The test procedure verifies that, when a storage design is used for the downlink interface, the buffer functions correctly and that the buffer capacity is sufficient. Transponder action when data are not available is also verified.

5.5.8.24.1 Downlink Interface Messages

The downlink interface buffer must consist of a minimum of 16 storage locations (or 'stores'). Each store must be capable of maintaining an MB message field, the associated BDS data source designator code and control data to designate message type (i.e. Ground-initiated, Air-initiated or Broadcast) and to provide means by which Air-initiated messages can be sequenced in the order received.

The BDS designator code for each store can have one of 256 values. For Ground-initiated Comm-B messages, only one MB message field associated with any specific BDS designator code can be stored at any one time, this message field being the last received with that code. For Air-initiated Comm-B messages, several MB message fields with the same BDS designator code can be stored simultaneously.

© EUROCAE, 2003

5.5.8.24.2 MB Message Content

If the downlink interface is common with interfacing used for the AIS and capability reports, message content verification has already been done. If the interface is not the one already verified, the 2256 test patterns described in Procedure #19 shall be used.

Different test patterns shall be used for messages with different BDS designator codes to permit identification of messages delivered to the test interrogator.

5.5.8.24.3 Buffer Input Rate

The buffer input rate shall be at least 16 messages per second.

5.5.8.24.4 Test Sequence, Buffer Design

Enter 261 messages into the downlink interface in the following sequence:

a. Five different messages intended for Air-initiated Comm-B.

b. 254 messages with different BDS designator codes intended for Ground Initiation

c. One message with a BDS designator code common with one message from the group in b. above, but differing in MB message content.

d. One message intended for ground initiation with the one BDS code not used in group b. above.

The object of this test sequence is to verify that:

a. The five Air-initiated messages are delivered in the sequence received and the Comm-B protocol (column L of the interrogation patterns listed in Procedure #18) is carried out correctly. The differing MB message fields serve to identify the message sequence.

b. The storage system can hold MB patterns for all 255 BDS codes corresponding to ground initiated messages simultaneously, and the messages are extracted by RR, DI and RRS codes corresponding to the BDS code in a sequence chosen by the interrogator and that these messages can be extracted several times each.

c. The message in d. above has replaced (updated) the appropriate one of the 254 ground initiated messages and that only this message, rather than the previous entry, is transmitted when requested by the interrogator.

d. An MB field consisting of all ZEROs is transmitted if the interrogation asks for a BDS code not presently in the buffer (i.e. verified prior to sequence step d).

This test sequence is to be performed as part of the test sequence of Procedure #18.

5.5.8.24.5 Test Sequence, Buffer Rate and Function

Enter 16 messages with differing BDS designator codes into the buffer.

In the next three seconds:

Interrogate at a rate of 1250/sec (one interrogation every 800 µs), extracting the messages from the buffer by use of the appropriate RR/RRS subfields. Stop interrogating after all messages have been received once.

Start entering replacement messages with identical BDS designator codes, but differing MB message content at a rate of at least 16/sec.

One second after the start of the test sequence, start extracting the messages again. Schedule extraction in bursts, each burst consisting of two interrogations following each other 800 µs apart. Schedule eight bursts at 125 millisecond intervals.

Two seconds after the start of the test sequence, continue extracting messages at the rate of five/sec.

© EUROCAE, 2003

The object of this test sequence is to verify that:

a. The transponder and interface buffer can sustain the minimum reply rate as specified.

b. Comm-B messages with common BDS designator codes are replaced as each message is received and that no scrambling of messages occurs as a result of this process.

c. As Comm-B messages are entered, they are replaced within the interface buffer irrespective of whether they have been transmitted or not.

This test sequence is to be performed as part of the test sequence of Procedure #18.

5.5.8.25 PROCEDURE #23 Downlink Interface, No-Storage Design

(Paragraph 3.5.6 b - insertion)

(Paragraph 3.17.3 d - no-storage design)

(Paragraph 3.17.3 d (5) - unavailable data)

This test procedure verifies that the no-storage design or "real time" downlink interface performs as specified.

5.5.8.25.1 Interface Patterns

This downlink interface operates in real time in conjunction with an uplink interface that also is a no-storage design. Message extraction commands for Comm-B appearing at the uplink interface are recognized by the message source which then enters the downlink content into the downlink interface in time to be transmitted in reply to the interrogation.

For air-initiated Comm-B transactions, the interface can insert the B-bit Code (DR=1) into short and long replies.

For directed Comm-B transmissions (Procedure #21), insertion of IIS and IDS into the UM field is required.

Because the data rate of a real-time interface equals the data rate of the transponder by definition, rate verifications are not necessary.

5.5.8.25.2 Test Sequence

If during the B-protocol test procedure (Procedure #18) messages have to be sent or message content has to be verified, supply this interface with the patterns required.

Verify interface design correctness by use of the 2256 test patterns described in Procedure #19.

Verify that B-bit insertion is accepted by the transponder in all applicable formats and that IIS and IDS insertion is accepted by the transponder only if the UM field is not in use for another purpose.

5.5.8.26 PROCEDURE #24 Comm-C Protocol

(Paragraphs 3.21.3 through 3.21.3.1 h - protocol)

(Paragraphs 3.21.2.4 through 3.21.2.4 e - multisite)

(Paragraphs 3.21.2.1 a through 3.21.2.2 b - multisite)

Flowcharts: Figures 3-19 and 3-20.

This test procedure verifies that the Comm-C protocol is carried out correctly.

The test procedure follows the notation of transponder states and of interrogation patterns as shown in the flowcharts.

© EUROCAE, 2003

Draft change proposal[227] after WG 49 meeting 4

5.5.8.26.1 Transponder States

#	H	I	J	K	
1	0	0	0	0	No ELM action in progress.
2	0	0	1	0	Waiting for segments, not multisite.
3	0	0	1	1	Ready for closeout by PC=5.
4	1	0	0	0	Multisite reservation made, waiting for RC=0.
5	1	0	1	0	Multisite, waiting for segments.
6	1	0	1	1	Cannot be closed out.
7	1	1	0	0	Can be closed out.
8	1	1	1	0	Can be closed out.
9	1	1	1	1	Ready for closeout.

NOTE: *The message is cancelled when a closeout is accepted.*

H = TRC-timer running.

I = IIS = stored value.

J = setup active.

K = all segments received.

States 7, 8, 9 are II-sensitive and must be used 16 times. States 3, 6, 9 are sensitive to the number of segments in the ELM, and must be used 15 times.

There are 354 transponder states to be used.

5.5.8.26.2 Interrogation Patterns

#	B	D	A	C	E	F	M	N	O	
1	0	1	0	0	0	0	0	0	0	Ordinary surveillance/Comm-A.
2	0	1	0	0	0	1	0	0	0	Invalid Closeout : DI is wrong.
3	0	1	0	0	1	0	0	0	0	Invalid Reservation : DI is wrong.
4	0	1	0	1	0	0	0	0	0	DI, but not for Comm-C.
5	0	1	0	1	0	1	0	0	0	Closeout.
6	0	1	0	1	1	0	0	0	0	Reservation.
7	0	1	1	0	0	0	0	0	0	Closeout if not multisite.
8	0	1	1	0	0	1	0	0	0	Closeout if not multisite.
9	0	1	1	0	1	0	0	0	0	Closeout if not multisite.
10	0	1	1	0	0	0	0	0	0	Closeout if not multisite, DI not multisite.
11	0	1	1	1	0	1	0	0	0	Closeout if not multisite
12	0	1	1	1	1	0	0	0	0	Closeout if not multisite and reservation.
13	1	0	0	0	0	0	0	0	0	UF=24, not for Comm-C.
14	1	0	0	0	0	0	0	0	1	Segment with TAS request.
15	1	0	0	0	0	0	0	1	0	Segment.
16	1	0	0	0	0	0	1	0	0	Initial Segment.

A means PC=5 = Closeout Uplink ELM.
B means UF=24.
C means DI=1 = multisite code.
D means UF=4, 5, 20, 21.
E means MES=1, 5 = reservation.
F means MES=2, 6, 7 = closeout.
M means RC=0.
N means RC=1.
O means RC=2.

© EUROCAE, 2003

Patterns 5 and 6 must be repeated 16 times for all IIS values.

Patterns 14, 15 and 16 must be repeated 15 times using each of the valid NC values. There are 88 interrogation patterns to be used.

5.5.8.26.3 Test Sequence

All 31 152 combinations of the 354 transponder states and 88 valid interrogation patterns shall be used.

Interrogate so that the transponder enters a given state and then use all interrogation patterns that will not change the state, followed by patterns that will. Repeat with the now-acquired state. This shall be done until all 31,152 combinations have been exhausted. (Some combinations must be repeated because more than one interrogation pattern may change the state). Extraction of TAS (see flowchart) may be used for verification.

a. Required Negative Tests

If PC is not required to be 5, use all other codes. If MES is not required to be 1, 2, 5, 6, 7, use all other codes.

If RC is not required to be 0, 1, 2, use RC=3.

Insert interrogation formats other than UF=4, 5, 20, 21, 24 one percent of the time to verify that they have no effect on the protocol.

b. UM Field Verification

During the test sequence when a multisite reservation is made (interrogation patterns 6, 12), the following reply will contain IIS and IDS in the UM field according to subparagraph 3.21.2.1. Verify that the UM content is correct.

c. TAS Field Verification

During the test sequence when a TAS report is requested (pattern 14), the reply will contain the TAS field. Verify that the content of TAS is correct.

d. Timer Duration and Automatic Closeout Test

Arrange the sequence so that the timer runs out occasionally and verify timer duration and closeout.

e. Simultaneous Tests

While the transponder is undergoing the verification of the Comm-C protocol, the interrogations can also be used to make tests for interface action and message content. These tests are described in Procedure #25.

5.5.8.27 PROCEDURE #24A Enhanced Comm-C Protocol

(Paragraph 3.21.5.2)

Flowchart: Figures 3-19A and 3-20A

If the enhanced uplink ELM protocol is implemented, procedure #24 is modified to reflect the automatic reservation of uplink ELMs. Transponder states 2, 3, 4, 5 and 6 are eliminated. The remaining states 1, 7, 8 and 9 are expanded due to conditions H, J and K varying for each II code. Condition H is expanded to 16 conditions, one for each II code. Condition I is no longer meaningful. Conditions J and K are also expanded to 16, one for each II code. State I for II code of 0 is simultaneous with the other 15 II codes varying between states 1, 7, 8 and 9. The number of iterations to run every possible combination is impractical. The test procedure will use different combinations of the additional possible states to provide verification of parallel operations. Interrogation patterns 14, 15 and 16 are further repeated 16 times for all IIS values. The verification procedure will include matching the reported segment data for each II code to that sent in the interrogation. The subset of the expanded states to run are:

© EUROCAE, 2003

a. 16 states, where the conditions are met once for each of the II codes.

b. 15 states, where the conditions are met for II code 0 along with one single II code.

c. 15 states, where the conditions are met for 2 non zero II codes, 3, 4, 5, etc. to 15 parallel non zero II codes and ending with all 16 II codes meeting the conditions.

The conditions for the other II codes not stipulated can be uniformly selected to provide a distribution of concurrent conditions.

The above results in 46 states to test in replacement of state 1, 46 states from state 7, 46 states to replace state 8 and 690 states to replace state 9.

5.5.8.28 PROCEDURE #25 Uplink Interface, ELM-Comm-C

(Paragraph 3.17.4 a,b - interface)

(Paragraph 3.17.4 c,d - interface rate)

This test procedure verifies that the information contained in Comm-C interrogations passes out of the transponder within the specified time interval and that such information correctly replicates the received transmission content. This test is independent of the interface design.

5.5.8.28.1 Interrogation Pattern

UF=24.

MC=6320 different patterns, half containing two ONEs, half containing two ZEROs.

5.5.8.28.2 Test Sequence

If during the Comm-C Protocol test procedure (Procedure #24), all segments have been received and are shifted out of the interface (Column K), verify that their content corresponds to the previously inserted patterns.

Verify that the content of four 16 segment ELMs can be extracted from the interface in any four second interval or, in one second if the transponder adheres to the enhanced uplink ELM protocol.

Interrogate with a burst of 16 segments and repeat 4 seconds later, one second later if the transponder adheres to the enhanced uplink ELM protocol..

Verify that the content of the first burst appears at the interface before the second burst is transmitted.

Verify the content of both bursts.

This test fits into the sequence of Procedure #24.

5.5.8.29 PROCEDURE #26 Comm-D Protocol

(Paragraph 3.21.2.1~~3.21.2.1~~ a - SD codes)

(Paragraph 3.21.2.1~~3.21.2.1~~ b - UM codes)

(Paragraphs 3.21.2.2 a and 3.21.2.2 b - multisite)

(Paragraphs 3.21.2.5 through 3.21.2.5 f - multisite)

(Paragraphs 3.21.4.1 through 3.21.4.1 e - ELM-D)

Flowcharts: Figures 3-21 and 3-22.

This test procedure verifies that the Comm-D protocol is carried out correctly.

The test procedure follows the notation of transponder states and interrogation patterns as shown in the flowcharts.

© EUROCAE, 2003

Draft change proposal[230] after WG 49 meeting 4

5.5.8.29.1 Transponder States

#	E	F	
1	0	0	Not multisite, will accept closeout or reservation.
2	0	1	Not multisite, will accept closeout or reservation.
3	1	0	Multisite, will not accept closeout, reservation.
4	1	1	Multisite, will accept closeout, reservation.

NOTE: *The message is cancelled when a closeout is accepted.*

E = TRD-timer running.

F = IIS = stored value.

States 3 and 4 are IIS sensitive and must be used 16 times.

There are 35 transponder states to be used.

5.5.8.29.2 Transponder Design

The maximum number of segments that transponders are able to transmit in one burst varies from 4 to 16; the number of tests to be made varies with the burst capability.

5.5.8.29.3 Interrogation Patterns

#	H	G	A	B	C	D	I	
1	0	1	0	0	0	0	0	Ordinary interrogation.
2	0	1	0	0	0	1	0	Invalid closeout, DI wrong.
3	0	1	0	0	1	0	0	Invalid reservation, DI wrong.
4	0	1	0	1	0	0	0	Multisite, not for Comm-D.
5	0	1	0	1	0	1	0	Closeout.
6	0	1	0	1	1	0	0	Reservation.
7	0	1	1	0	0	0	0	Closeout, not multisite.
8	0	1	1	0	0	1	0	Closeout, not multisite
9	0	1	1	0	1	0	0	Closeout, not multisite
10	0	1	1	1	0	0	0	Closeout, multisite not for Comm-D.
11	0	1	1	1	0	1	0	Closeout and possible closeout, multisite.
12	0	1	1	1	1	0	0	Closeout, not multisite and reservation.
13	1	0	0	0	0	0	0	UF=24, not for Comm-D.
14	1	0	0	0	0	0	1	UF=24, command to transmit segments per SRS.

A = PC=6 closeout DELM.

B = DI=1 multisite.

C = MES=3, 6 reservation.

D = MES=4, 5, 7 closeout.

G = UF=4, 5, 20, 21.

H = UF=24.

I = RC=3.

Patterns 5, 6, 11, 12, must be used at least 16 times to provide for all II codes.

© EUROCAE, 2003

Pattern 14 must be used as often as necessary to exhaust the SRS and DR codes according to the capability of the transponder.

Verify that closeout does not occur when the D-register of Figures 3-21 and 3-22 is not set, i.e., when no request for transmission has yet been complied with.

5.5.8.29.4 Test Sequence

The number of combinations of transponder states and interrogation patterns is design dependent. All combinations must be exercised.

a. DR Verification

At the Comm-B downlink interface, apply a request for air-initiated Comm-B (DR=1), and at the Comm-D interface apply a request to send a Comm-D ELM (DR larger than 15).

Verify that Comm-B has priority by observing that the B-protocol must be closed out before the DR code of the Comm-D transaction appears in replies.

Verify that the DR field in DF = 4, 5, 20, 21 correctly states the number of segments waiting at the interface to be transmitted.

b. UM Verification

If a multisite reservation is made during the test sequence (patterns 6, 12), the following reply will contain IIS and IDS in the UM field according to paragraph 3.21.2.1 b. Verify that the UM content is correct.

c. SRS Verification

Consider the SRS bit pattern as a code of length corresponding to the maximum burst capability of the transponder. Use all combinations containing two ONEs and all combinations containing two ZEROs for this word length as the test pattern for the following verifications.

Verify that the transponder correctly transmits the number and identity of segments requested in the SRS subfield of UF=24 with RC=3.

The identity of segments is indicated in the ND field of each segment and must be inserted at the ELM downlink interface.

Verify that if SRS requests a segment identity which is not available in this transaction, the transponder will send ND according to the request but will leave the MD field of that reply all ZEROs.

d. Required Negative Tests

If PC is not required to be 6, use all other codes. If DI is not required to be 1, use all other codes. If MES is not required to be 3, 4, 5, 6, 7 use all other codes.

Insert interrogation formats other than UF=4, 5, 20, 21, 24 one percent of the time to verify that they have no effect on the protocol.

e. Timer Duration and Automatic Closeout Test

Arrange the sequence so that the timer runs out occasionally and verify timer duration and closeout.

f. Simultaneous Tests

While the transponder is undergoing the verification of the D-Protocol, the number of interrogations can be used to make tests for interface action and message content. These tests are described in Procedures #27 and #28.

5.5.8.30 PROCEDURE #26A Enhanced Comm-D Protocol (Paragraph 3.21.5.3)

Flowchart: Figures 3-21A and 3-22A

If the transponder adheres to the enhanced multisite downlink ELM protocol as described in subparagraph 3.21.5.3, the following test procedures shall verify that the enhanced protocol is carried out correctly by the transponder.

© EUROCAE, 2003

The transponder shall be tested according to the guidelines stipulated in procedure #26 with the following additions and/or modifications:

Transponder condition E is defined for non multisite and IIS values 1 - 15. The transponder condition F is no longer meaningful.

The test will be expanded to include the additional combinations of condition E since the condition exists for each II. The resulting transponder states consist of all combinations of conditions for each of the 16 II codes.

UM Verification

In all cases verify that the transponder reports the proper state in the UM field and the report is for the IIS contained in the interrogation pattern.

DR Verification

Verify the DR code as described with the addition of DR code extraction for all IIS codes under the conditions of concurrent B messages, B broadcast messages and downlink ELMs.

5.5.8.31 PROCEDURE #27 Directed Comm-D (Paragraph 3.21.2.5 b - protocol)

This test procedure verifies that multisite directed Comm-D transactions are carried out correctly by the transponder.

The comments on transponder design dependence of this test are essentially the same as presented in Procedure #21.

5.5.8.31.1 Interface Patterns of Test Sequence

During the D-protocol test procedure (Procedure #26) enter into the interface a downlink pattern containing DR corresponding to the number of segments to be transmitted, IDS=3 (the UM code for Comm-D reservation) and IIS corresponding to the desired destination's code.

5.5.8.31.2 Test Sequence

Use all IIS codes from 1 to 15 and interrogate so that the downlink formats DF=4, 5, 20, 21 are used.

Verify that this directed Comm-D has not interrupted an existing reservation condition.

Reply and coding content are verified as part of Procedures #26 and #28 respectively.

5.5.8.32 PROCEDURE #28 Comm-D Interface, Rate and Content

(Paragraph 3.17.4 - interface)

(Paragraph 3.17.4 d - data rate)

This test procedure verifies that the downlink interface can sustain the required data rate and that the transponder transmits downlink content as entered.

5.5.8.32.1 Transponder Design

The Comm-D interface can exist as a separate port or as one direction of a bidirectional ELM (C/D) interface. The downlink port can be designed to take the ND and MD fields only, leaving the UF and KE generation to internal circuitry. Another design would need input for DF and KE as well.

The minimum input data rate for this interface must equal the maximum reply capability of the transponder. Although that is not specified in this document, the maximum practical reply capability is 16 segments in four seconds.

5.5.8.32.2 Interface Patterns

For each ND code appropriate for the transponder under test, generate a total of 6320 MD patterns, half containing two ONEs and half containing two ZEROs.

© EUROCAE, 2003

5.5.8.32.3 Test Sequence

Use all required MD patterns and all ND values possible with this transponder.

Verify that the patterns are transmitted as entered.

Schedule Comm D transactions at the maximum rate for which the transponder is designed (4 to 16 segment DELMs at a rate of one per 4 seconds for a standard DELM transponder. 16 segment DELMs at a rate of one per second for an enhanced DELM transponder).

Verify that the interface can supply new MD patterns at those rates.

NOTE: *It may be necessary to schedule more Comm-D transactions than are required for the protocol test alone.*

5.5.8.33 PROCEDURE #29 Comm-U Uplink Interface

(Paragraph 3.17.3 - uplink interface)

(Paragraph 3.21.1.16~~3.21.1.16~~ - protocol)

(Paragraph 3.23.1.3 - MU message, Comm-U used by ACAS)

This test procedure verifies that the Comm-U interface serving UF=0, 16 replicates the uplink content as received.

5.5.8.33.1 Transponder Design

This uplink interface is a real-time interface that carries the content of both short and long uplink formats UF=0, 16.

The design is otherwise not specified and is likely to be tailored to a specific ACAS installation.

5.5.8.33.2 Interrogation Patterns

For UF=0, use a total of 702 different patterns for bits 6 through 32 of the interrogation format. There are 351 patterns containing two ONEs and 351 containing two ZEROs.

For UF=16, use 6806 "two ONEs-two ZEROs" patterns for bits 6 through 88 of the interrogation.

5.5.8.33.3 Test Sequence

Use all required patterns and verify that they appear correctly at the interface and arrive there before the corresponding transmitted reply.

NOTE: *An ACAS installation may be designed so that this interface is not electrically accessible. If such a condition exists, the test procedures for ACAS must be used to verify Comm-U/V performance.*

5.5.8.34 PROCEDURE #30 Sensitivity Level Operation

(Paragraphs 3.23.1.1 and 3.23.1.5)

This test verifies that the transponder (1) accepts incoming UF=20, 21 interrogations containing a Sensitivity Level Command Message and passes all necessary information (IIS or SIS and SLC subfields) to the ACAS unit, and (2) receives sensitivity level information from the ACAS unit and correctly reports this information in outgoing DF=0, 16 replies.

a. Send a status = "on-board ACAS with vertical-only resolution capability" and a sensitivity level=6 to the transponder via the transponder/ACAS interface.

   Interrogate the transponder with a UF=0 and a UF=16 non-acquisition interrogation.

   Show that the transponder correctly reports the ACAS status and Sensitivity Level in the RI and SL fields respectively.

© EUROCAE, 2003

b. Interrogate the transponder with a UF=20 interrogation containing a Sensitivity Level Command Message (See paragraph 3.23.1.1) with IIS=1 and SLC=4.

Show that the IIS and SLC subfields are correctly output on the transponder/ACAS interface.

c. Interrogate the transponder with a UF=21 interrogation containing a Sensitivity Level Command Message with IIS=15 and SLC=5.

Show that the IIS and SLC subfields are correctly output on the transponder/ACAS interface.

d. Interrogate the transponder with a UF=20 interrogation containing a Sensitivity Level Command Message with SIS=1 and SLC=4.

Show that the SIS and SLC subfields are correctly output on the transponder/ACAS interface.

e. Interrogate the transponder with a UF=21 interrogation containing a Sensitivity Level Command Message with SIS=63 and SLC=5.

Show that the SIS and SLC subfields are correctly output on the transponder/ACAS interface.

f. Send a sensitivity level=4 to the transponder via the transponder/ACAS interface. Interrogate the transponder with a UF=0 and a UF=16 non-acquisition interrogation.

Show that the transponder correctly reports the ACAS status and sensitivity level in the RI and SL fields respectively.

5.5.8.35 PROCEDURE #31 Transmission of Resolution Advisory Reports to Mode S Ground Interrogator

(Paragraph 3.23.1.2 a.)

This test verifies that the transponder correctly determines the Transponder/ACAS system capability (either Pre-Version 7 or Version 7 compatibility) based on communication with the on-board ACAS unit and then reports RA information in the appropriate format. This test requires that the transponder demonstrates proper operation with both Pre-version 7 and version 7 compatible transponder/ACAS interfaces. Also this test verifies that the transponder correctly (1) receives resolution advisory information from the ACAS unit, (2) indicates to the ground (DR field in DF=4, 5, 20, 21 replies) that it has information awaiting downlink, (3) transmits this information in DF=20, 21 replies and (4) retains resolution advisory information for 18 ±1 seconds following the end of the resolution advisory and (5) (for Version 7 compatible transponder/ACAS systems) indicates the end of the RA via the RA terminated indicator.

NOTE: The tests refer to an 'ACAS Resolution report available code' in the DR field of DF=4, 5, 20 and 21 replies. the ACAS Resolution report available code is interpreted herein as bit 12 of the 5-bit (bits 9-13) DR field. That is, if DR=2, 3, 6 or 7 then the 'ACAS Resolution report available code' is set and the transponder is therefore indicating that it has ACAS information available.

5.5.8.35.1 PROCEDURE #31A Transmission of Resolution Advisory Reports for Transponders operating with a Pre-Version 7 Compatible ACAS

(Paragraph 3.23.1.2 a (2))

a. ARA=0 and RAC=0:

Interrogate the transponder with UF=4, 5, 20, 21 interrogations when no resolution advisory information has been received via the transponder/ACAS interface.

Show that the 'ACAS Resolution report available code' in the DR field is not set in the DF=4, 5, 20, 21 replies.

© EUROCAE, 2003

Draft change proposal[235] after WG 49 meeting 4

NOTE: *A transponder that is not connected to an ADLP will only respond to the UF= 20 or 21 interrogations if the MDP channel number is one of those reserved for ACAS*

b. ARA≠0 and RAC≠0:

(1) Send ARA='10 0000 0000 0000' {Binary} and RAC='1000' {Binary} to the transponder via the transponder/ACAS interface.

Interrogate the transponder with UF=4, 5, 20, 21 interrogations.

Show that the 'ACAS Resolution report available code' in the DR field is correctly set in the DF=4, 5, 20, 21 replies.

(2) Interrogate the transponder with UF=4, 5, 20, 21 interrogation with RR=19.

Show in each of the four cases that the transponder replies with correct ARA and RAC information in the DF=20, 21 replies and the 'ACAS Resolution report available code' in the DR field is set and that RAT = 0..

(3) Send ARA=0 and RAC=0 to the transponder via the transponder/ACAS interface.

Interrogate the transponder once per second for the next 20 seconds with a UF=4 interrogation with RR=19.

Show that the 'ACAS Resolution report available code' in the DR field in the reply remains correctly set for 18 ±1 seconds after the end of the resolution advisory and is ZERO thereafter.

Show that ARA='10 0000 0000 0000' {Binary}, RAC='1000' {Binary} and RAT = 1 are reported for 18 ±1 seconds after the end of the resolution advisory. After this, ARA=0, RAT = 0 and RAC=0 should be reported.

c. ARA≠0 and RAC=0:

Repeat steps in b. with ARA='10 0000 0000 0000' {Binary} and RAC='0000' {Binary}.

d. ARA=0 and RAC≠0.

(1) Send ARA=0 and RAC='1000' {Binary} to the transponder via the transponder/ACAS interface.

Interrogate the transponder with UF=4, 5, 20, 21 interrogations.

Show that the 'ACAS Resolution report available code' in the DR field is not set in the DF=4, 5, 20, 21 replies.

(2) Interrogate the transponder with UF=4, 5, 20, 21 interrogation with RR=19.

Show in each of the four cases that the transponder replies with correct ARA and RAC information in the DF=20, 21 replies the 'ACAS Resolution report available code' in the DR field is not set. Also show that RAT = 0.

(3) Send ARA=0 and RAC=0 to the transponder via the transponder/ACAS interface.

Interrogate the transponder once per second for the next 20 seconds with a UF=4 interrogation with RR=19.

Show that the 'ACAS Resolution report available code' in the DR field in the reply is not set and that the transponder replies with RAC = 0 and RAT = 0.

© EUROCAE, 2003

e. ARA≠0, RAC≠0, new ARA and RAC values during 18-second time-out:

(1) Send ARA='00 0001 0000 0000' {Binary} and RAC='0100' {Binary} to the transponder via the transponder/ACAS interface.

Interrogate the transponder with UF=4, 5, 20, 21 interrogations.

Show that the 'ACAS Resolution report available code' in the DR field is set in the DF=4, 5, 20, 21 replies.

(2) Interrogate the transponder with UF=4, 5, 20, 21 interrogation with RR=19.

Show in each of the four cases that the transponder replies with correct ARA and RAC information in the DF=20, 21 replies and the 'ACAS Resolution report available code' in the DR field is set.

(3) Send the following sequence (60 seconds total) of ARA and RAC data to the transponder via the transponder/ACAS interface:

- For 5 seconds, ARA=0 and RAC=0;
- For the next 5 seconds, ARA='10 0000 0000 0000' {Binary} and RAC='1000' {Binary} ;
- For the next 5 seconds, ARA='01 0000 0000 0000' {Binary} and RAC=0;
- For the next 5 seconds, ARA=0 and RAC=0;
- For the next 5 seconds, ARA=0 and RAC='0100' {Binary} ;
- For the next 5 seconds, ARA='01 0000 0000 0000' {Binary} and RAC=0;
- For the next 30 seconds, ARA=0 and RAC=0;

Interrogate the transponder once per second during the 60 seconds described above with a UF=4 interrogation with RR=19.

Show that the 'ACAS Resolution report available code' in the DR field in the replies remains set for the first 48±1 seconds and is set to ZERO thereafter. Show that in the replies:

- For the first 5 seconds, ARA='00 0001 0000 0000' {Binary} and RAC='0100' {Binary};
- For the next 5 seconds, ARA='10 0000 0000 0000' {Binary} and RAC='1000' {Binary};
- For the next 38±1 seconds, ARA='01 0000 0000 0000' {Binary} and RAC=0;
- For the next 12±1 seconds, ARA=0 and RAC=0;
- RAT = 1 from 16 s to 25 s and from 31 s to 48 s, and that RAT = 0 at other times

5.5.8.35.2 PROCEDURE #31B Transmission of Resolution Advisory Reports for Transponders operating with a Version 7 Compatible ACAS

(Paragraph 3.23.1.2 a (3))

a. ARA=0 and RAC=0:

Interrogate the transponder with UF=4, 5, 20, 21 interrogations when no resolution advisory information has been received via the transponder/ACAS interface.

Show that the 'ACAS Resolution report available code' in the DR field is not set in the DF=4, 5, 20, 21 replies.

© EUROCAE, 2003

b. ARA≠0 and RAC≠0:

(1) Send ARA='10 0000 0000 0000' {Binary} and RAC='1000' {Binary}, RAT=0, MTE=0, TTI=1 and TID='AA AA AA' {HEX} to the transponder via the transponder/ACAS interface.

Interrogate the transponder with UF=4, 5, 20, 21 interrogations.

Show that the 'ACAS Resolution report available code' in the DR field is set in the DF=4, 5, 20, 21 replies.

(2) Interrogate the transponder with UF=4, 5, 20, 21 interrogation with RR=19.

Show in each of the four cases that the transponder replies with correct ARA, RAC, RAT(=0), MTE, TTI and TID information in the DF=20, 21 replies and the 'ACAS Resolution report available code' in the DR field is set.

(3) Send ARA=0, RAC=0, RAT=1 and MTE=0 to the transponder via the transponder/ACAS interface.

Interrogate the transponder once per second for the next 20 seconds with a UF=4 interrogation with RR=19.

Show that the 'ACAS Resolution report available code' in the DR field in the reply remains set for 18±1 seconds after the end of the resolution advisory.

Show that RAT=1, ARA='10 0000 0000 0000' {Binary}, RAC='1000' {Binary}, MTE=0, TTI=1 and TID='AA AA AA' {HEX} are reported for 18±1 seconds after the end of the resolution advisory. After this RAT=0, ARA=0, RAC=0, MTE=0, TTI=0 and TID=0 should be reported and the 'ACAS Resolution report available code' in the DR field in the reply is not set.

c. ARA≠0 and RAC=0:

Repeat steps in b. with ARA='10 0000 0000 0000' {Binary}, RAC=0, TTI=2, TIDA = '0 1010 1010 1010' {Binary}, TIDR='101 0101' {Binary}, TIDB='01 0101' {Binary}.

d. ARA=0 and RAC≠0.

(1) Send ARA=0 and RAC='1000' {Binary}, RAT=1 and MTE=0 to the transponder via the transponder/ACAS interface.

Interrogate the transponder with UF=4, 5, 20, 21 interrogations with RR=0.

Show that the 'ACAS Resolution report available code' in the DR field is not set in the DF = 4,5 replies.

(2) Interrogate the transponder with UF=4, 5, 20, 21 interrogation with RR=19.

Show that the 'ACAS Resolution report available code' in the DR field is not set in the DF=20, 21 replies.

(3) Send ARA=0, RAC=0, RAT=1 and MTE=0 to the transponder via the transponder/ACAS interface.

Interrogate the transponder once per second for the next 20 seconds with a UF=4 interrogation with RR=19.

Show that the 'ACAS Resolution report available code' in the DR field in the reply is not set.

© EUROCAE, 2003

e. ARA≠0, RAC≠0, new ARA and RAC values during 18-second time-out:

(1) Send ARA='00 0001 0000 0000' {Binary}, RAC='0100' {Binary}, RAT=0, MTE=0, TTI=1 and TID='55 55 55' {HEX} to the transponder via the transponder/ACAS interface.

Interrogate the transponder with UF=4, 5, 20, 21 interrogations.

Show that the 'ACAS Resolution report available code' in the DR field is set in the DF=4, 5, 20, 21 replies.

(2) Interrogate the transponder with UF=4, 5, 20, 21 interrogation with RR=19.

Show in each of the four cases that the transponder replies with correct ARA, RAC, RAT(=0), MTE, TTI and TID information in the DF=20, 21 replies and the 'ACAS Resolution report available code' in the DR field is set.

(3) Send the following sequence (60 seconds total) of ARA and RAC data to the transponder via the transponder/ACAS interface.

- For 5 seconds, ARA=0, RAC=0, RAT=1 and MTE=0;
- For the next 5 seconds, ARA='10 0000 0000 0000' {Binary}, RAC='1000' {Binary}, RAT=0, MTE=0, TTI=1 and TID='AA AA AA' {HEX};
- For the next 5 seconds, ARA='01 0000 0000 0000' {Binary}, RAC=0, RAT=0, MTE=0, TTI=1 and TID='55 55 55' {HEX};
- For the next 5 seconds, ARA=0, RAC=0, RAT=1 and MTE=0;
- For the next 5 seconds, ARA=0, RAC='0100' {Binary}, RAT=1 and MTE=0;
- For the next 5 seconds, ARA='01 0000 0000 0000' {Binary}, RAC=0, RAT=0, MTE=0, TTI=1 and TID='55 55 55' {HEX};
- For the next 30 seconds, ARA=0, RAC=0, RAT=1 and MTE=0;

Interrogate the transponder once per second during the 60 seconds described above with a UF=4 interrogation with RR=19.

Show that the 'ACAS Resolution report available code' in the DR field in the replies remains set for the first 48±1 seconds and is set to ZERO thereafter. Show that in the replies:

- For the first 5 seconds, ARA='00 0001 0000 0000' {Binary}, RAC='0100' {Binary}, RAT=1, MTE=0, TTI=1 and TID='55 55 55' {HEX};
- For the next 5 seconds, ARA='10 0000 0000 0000' {Binary}, RAC='1000' {Binary}, RAT=0, MTE=0, TTI=1, and TID='AA AA AA' {HEX};
- For the next 5 seconds, ARA='01 0000 0000 0000' {Binary}, RAC=0, RAT=0, MTE=0, TTI=1, and TID='55 55 55' {HEX};
- For the next 10 seconds, ARA='01 0000 0000 0000' {Binary}, RAC=0, RAT=1, MTE=0, TTI=1, and TID='55 55 55' {HEX};
- For the next 5 seconds, ARA='01 0000 0000 0000' {Binary}, RAC=0, RAT=0, MTE=0, TTI=1, and TID='55 55 55' {HEX};
- For the next 18±1 seconds, ARA='01 0000 0000 0000' {Binary}, RAC=0, RAT=1, MTE=0, TTI=1 and TID='55 55 55' {HEX};
- For the next 12±1 seconds, ARA=0, RAC=0, RAT=0 and MTE=0;

© EUROCAE, 2003

Draft change proposal[239] after WG 49 meeting 4

5.5.8.36 PROCEDURE #32 Transmission of ACAS Capability Information to a Mode S Sensor

(Paragraph 3.23.1.2 b and to other ACAS aircraft Paragraph 3.23.1.5)

This test verifies that the transponder receives operational information from the ACAS unit and correctly reports this information in Data Link Capability Report to a Mode S sensor and in special surveillance replies to another ACAS aircraft.

This test requires that the transponder demonstrates proper operation with both Pre-Version 7 and Version 7 compatible transponder/ACAS interface.

5.5.8.36.1 PROCEDURE #32A Transmission of ACAS capability Information to a Mode S Sensor (Paragraph 3.23.1.2 b (2)) and to other ACAS aircraft (Paragraph 3.23.1.5) for a transponder operating with a Pre-Version 7 compatible ACAS.

a. Enable the transponder only (i.e. transponder/ACAS interface not operational).

b. Interrogate the transponder with a non-acquisition UF=0 interrogation.

   Show that the transponder replies with correct capability information in the DF=0 reply (i.e., RI=0)

c. Interrogate the transponder with :

   - UF=4, with RR=17 and DI $\neq$ 7.
   - UF=5, with RR=17 andDI $\neq$ 7.
   - UF=20, with RR=17, DI=7 and RRS=0.
   - UF=21, with RR=17, DI=7 and RRS=0.

   Show, in each of the four cases, that the transponder replies with correct capability information in the DF=20,21 replies (i.e., BDS1=1, BDS2=0, bit 48=0, bits 69, 70, 71 and 72 =0000).

d. Repeat the procedures in steps b and c above for each of the following 16 cases:

   (1) ACAS reports 'on board ACAS with resolution capability inhibited' (RI=2) to the transponder via the ACAS/transponder interface. The DF=0 reply should show RI=2. The DF=20, 21 replies should show bit 48=1 and bits 69, 70, 71 and 72 = 0000.

   (2) ACAS reports 'on-board ACAS with vertical-only resolution capability' (RI=3) to the transponder via the ACAS/transponder interface. The DF=0 reply should show RI=3. The DF=20,21 replies should show bit 48=1 and bits 69, 70, 71 and 72 =0100.

   (3) ACAS reports 'on-board ACAS with vertical and horizontal resolution capability' (RI=4) to the transponder via the ACAS/transponder interface. The DF=0 reply should show RI=4. The DF=20,21 replies should show bit 48=1 and bits 69, 70, 71 and 72=1000.

   (4-16) ACAS reports RI=0, 1, 5, 6, 7, 8, 9, 10, 11, 12, 13, 14, 15 to the transponder via the ACAS/transponder interface. The DF=0 reply should show RI=0 The DF=20, 21 replies should show bit 48=0 and bits 69, 70, 71 and 72 = 0000.

© EUROCAE, 2003

5.5.8.36.2 PROCEDURE #32B Transmission of ACAS capability Information to a Mode S Sensor (Paragraph 3.23.1.2.b.3) and to other ACAS aircraft (Paragraph 3.23.1.5) for a transponder operating with a Version 7 compatible ACAS.

Repeat the procedures provided in steps a through d of Procedure #32A for a Version 7 compatible transponder/ACAS interface.

Show that the transponder properly reports with the RI field in DF=0 replies set exactly as provided in steps a to d of Procedure#32A.

Show that the transponder properly reports with DF=20, 21 replies that are exactly the same as those specified in steps b to d of Procedure #32A with the exception that bit 71=1 for cases 1 - 3 but that bit 71 = 0 for cases 4 - 16 in step f.

5.5.8.37 PROCEDURE #33 - ACAS or Transponder/ACAS Failure during Transmission of RA Report and Data Link Capability Report to a Mode S Sensor (Paragraph 3.23.1.2 a (3) and 3.23.1.2 b (3))

This test applies only to Version 7 compatible systems.

a. Send ARA='10 0000 0000 0000' {Binary}, RAC='1000', RAI=0, MTE=0, TTI=1 and TID='AA AA AA' {HEX} to the transponder via the transponder/ACAS interface once per second for 5 seconds.

During the 5th second, cause the ACAS unit to report an ACAS failure to the transponder (i.e. RI=0 and SL=1).

Interrogate the transponder once per second during the 5 seconds described above and for an additional 25 seconds (30 seconds total) with UF=4 interrogations with RR=19 and DI≠7.

Show that in the DF=20 replies:

(1) For the first 23±1 seconds, the 'ACAS Resolution report available code' is set in the DR field. Thereafter it's cleared.

(2) For the first 5 seconds, ARA='10 0000 0000 0000' {Binary}, RAC='1000' {Binary}, RAT=0, MTE=0,TTI=1 and TID='AA AA AA' {HEX}.

(3) For the next 18±1 seconds, ARA='10 0000 0000 0000' {Binary}, RAC='1000' {Binary}, RAT=1, MTE=0,TTI=1 and TID='AA AA AA' {HEX}.

(4) For the remaining 7±1 seconds, ARA, RAC, MTE, TTI and TID shall be set to ZERO.

b. Repeat the steps in test a. except during the 5th second, cause the transponder to recognize a failure on the transponder/ACAS interface (i.e., disconnect or otherwise interrupt the interface).

The results should be the same as in test a.

c. Send "on-board ACAS with vertical-only resolution capability" (RI=3) to the transponder via the transponder/ACAS interface once per second for 30 seconds.

During the 5th second, cause the transponder to recognize a failure on the transponder/ACAS interface (i.e., disconnect or otherwise interrupt the interface).

Interrogate the transponder once per second for 30 seconds with UF=4 interrogations with RR=17 and DI≠7.

Show that in the DF=20 replies:

- For the first 5 seconds, bit 48=1 and bits 69, 70, 71 and 72 = '0110'.
- For the next 25 seconds bits 48, 69, 70, 71 and 72 shall be set to ZERO.

© EUROCAE, 2003

Draft change proposal[241] after WG 49 meeting 4

5.5.8.38 Procedure #34 Coordination

(Paragraphs 3.23.1.3 and 3.23.1.4)

This test verifies that the transponder (1) accepts incoming UF=16 interrogations containing an ACAS Resolution Message and passes all necessary information to the ACAS unit, and (2) receives coordination information from the ACAS unit and correctly reports this information in outgoing DF=16 replies.

a. Interrogate the transponder with a UF=16 interrogation with UDS=48, MTB=0, CVC=0, VRC=2, CHC=0, HRC=0, VSB=7 when no resolution advisory information has been received via the transponder/ACAS interface.

   Show that the transponder sends a DF=16 reply with VDS=48, ARA=0, and RAC=0.

   Show that the coordination information in the MU field is correctly output on the transponder/ACAS interface.

b. Send ARA=0 and RAC='0100' to the transponder via the transponder/ACAS interface.

   Interrogate the transponder with a UF=16 interrogation with UDS=48, MTB=0, CVC=0, VRC=2, CHC=0, HRC=0, VSB=7.

   Show that the transponder sends a DF=16 reply with VDS=48, ARA=0, and RAC='0100' {Binary}.

   Show that the coordination information in the MU field is correctly output on the transponder/ACAS interface.

c. Send ARA='00 0001 0000 0000' {Binary} and RAC='0100' {Binary} to the transponder via the transponder/ACAS interface.

   Interrogate the transponder with a UF=16 interrogation with UDS=48, MTB=0, CVC=2, VRC=0, CHC=0, HRC=0, VSB=13.

   Show that the transponder sends a DF=16 reply with VDS=48, ARA='00 0001 0000 0000' {Binary}, and RAC='0100' {Binary}.

   Show that the coordination information in the MU field is correctly output on the transponder/ACAS interface.

d. Send ARA='00 0001 0000 0000' {Binary} and RAC=0 to the transponder via the transponder/ACAS interface.

   Interrogate the transponder with a UF=16 interrogation with UDS=48, MTB=0, CVC=2, VRC=0, CHC=0, HRC=0, VSB=13.

   Show that the transponder sends a DF=16 reply with VDS=48, ARA='00 0001 0000 0000' {Binary}, and RAC=0.

e. Send ARA=0 and RAC=0 to the transponder via the transponder/ACAS interface.

   Interrogate the transponder with a UF=16 interrogation with UDS=48, MTB=0, CVC=0, VRC=1, CHC=0, HRC=0, VSB=14.

   Show that the transponder sends a DF=16 reply with VDS=48, ARA=0, and RAC=0.

   NOTE: *When the resolution advisory is ended, the ARA and RAC fields reflect this change immediately in the DF=16 reply but not until 18 seconds has elapsed for the DF=20, 21 Resolution Advisories Report.*

© EUROCAE, 2003

5.5.8.39 PROCEDURE #35 ACAS Broadcast Message

(Paragraph 3.23.1.3)

This test verifies that the transponder accepts incoming UF=16 interrogations containing an ACAS Broadcast Message and passes all necessary information to the ACAS unit.

In one second, interrogate the transponder with ten UF=16 interrogations, each containing an ACAS Broadcast Message (UDS1=3, UDS2=2, and interrogation address=all 1's), each containing a unique "own" Mode S address (i.e., ten different Mode S addresses).

Show that incoming information is correctly output on the transponder/ACAS interface.

5.5.8.40 PROCEDURE #36 Transponder Replies to Incoming ACAS Resolution Messages (Paragraph 3.23.2.1)

This test verifies that (1) whenever the transponder replies with a valid Coordination Reply Message to an incoming ACAS Resolution Message, the incoming message is successfully delivered to the ACAS unit; and (2) whenever the transponder's internal queue is full or some other condition is present which would prevent delivery of the message to ACAS, the transponder does not reply with a valid Coordination Reply Message to an incoming ACAS Resolution Message and does not pass the incoming data to ACAS.

a. Interrogate the transponder with a UF=16 interrogation containing a valid ACAS Resolution Message when all of the following conditions are true: the transponder is reporting that it has an operational ACAS; no transponder queues are full; and no ACAS failure conditions exist.

   Demonstrate that the transponder transmits a valid Coordination Reply Message and that the incoming coordination information is correctly output on the transponder/ACAS interface.

b. Interrogate the transponder with a UF=16 interrogation containing a valid ACAS Resolution Message when the transponder queue is full.

   Demonstrate that the transponder does not send a valid Coordination Reply Message and does not output the incoming coordination information on the transponder/ACAS interface.

   Demonstrate that when the queue is full the transponder still replies to interrogations that do not contain information directed to the transponder/ACAS interface.

c. Interrogate the transponder with a UF=16 interrogation containing a valid ACAS Resolution Message when a ACAS failure condition is present (the transponder is reporting no resolution advisory capability).

   Demonstrate that the transponder does not send a valid Coordination Reply Message and does not output the incoming coordination information on the transponder/ACAS interface.

   Demonstrate that when a ACAS failure is present the transponder still replies to interrogations that do not contain information directed to the transponder/ACAS interface.

   NOTE: *When the transponder does not send a valid reply, it may either send no reply or send a DF=16 reply with all 56 bits of the MV field equal to zero.*

© EUROCAE, 2003

5.5.8.41 PROCEDURE #37 Transponder/ACAS Throughput

(Paragraphs 3.23~~3.23~~ b & g)

This test verifies that the interrogation input rate requirement and the reply rate limiting requirement referenced above are met by the transponder. In addition, this test is important for demonstrating that the transponder's internal structures (e.g., queues, timing) have been designed in such a way that they are compatible with any ACAS unit with which the transponder is paired.

a. Interrogate the transponder with UF=16 interrogations for 5 seconds at a continuous rate of 16.6 milliseconds, i.e., 60 interrogations per second.

   Demonstrate that the transponder accepts all interrogations, transmits a valid reply to each interrogation, and correctly outputs the information on the transponder/ACAS interface in the order in which it was received by the transponder.

b. Interrogate the transponder with UF=16 interrogations for 5 seconds at a rate greater than that at which the transponder can accept all interrogations.

   NOTE: *In some installations, interrogating at a high rate with all UF=16 interrogations causes the transponder's internal queue to fill, thus stopping the transponder's acceptance of and reply to interrogations because of the full queue, rather than because of the reply rate limiting. If this is the case, it is necessary to interrogate the transponder with a mix of short and long interrogations; this mix should include the largest number of UF=16 interrogations that is possible while at the same time avoiding any queue overflow. This will allow the reply rate limiting feature to be tested.*

   Demonstrate that the reply rate limiting feature is exercised (i.e., there is a mechanism which recognizes the high interrogation rate and stops the transponder from accepting and replying to replies before the transponder overheats or otherwise becomes adversely affected).

   Demonstrate that the transponder can accept and reply to at least the number of interrogations specified in paragraph 3.17.3 c.

   Demonstrate that for each accepted interrogation, and only for each accepted interrogation, the transponder transmits a valid reply and correctly outputs the information on the transponder/ACAS interface in the order in which it was received by the transponder.

c. Interrogate the transponder with UF = 16 interrogations at a burst rate greater than that which the transponder can accept. Maintain the burst scenario for at least 5 seconds.

d. Cause the ACAS test unit to accept information from the transponder at the slowest rate possible including a retry while still conforming to the transponder/ACAS interface protocols.

   Demonstrate that for each accepted interrogation, and only for each accepted interrogation, the transponder transmits a valid reply and correctly outputs the information on the transponder/ACAS interface in the order in which it was received by the transponder.

   NOTE: *Burst interrogations must be used to ensure that the ACAS interface has not failed due to lack of periodic data updates.*

5.5.8.42 PROCEDURE #38 Transponder Communication Timing

(Paragraph 3.23.2.4)

This test verifies that the communications timing requirement specified in paragraph 3.23.2.4 is met.

© EUROCAE, 2003

Demonstrate that the elapsed time from the transponder's receipt of an incoming UF=16 interrogation containing an ACAS Resolution Message to the receipt by the ACAS test unit from the ACAS/transponder interface is less than or equal to 0.01 second.

NOTE: *This assumes an interrogation rate less than or equal to 60 interrogations per second.*

5.5.8.43 PROCEDURE #39: ACAS Crosslink

(Paragraph 3.18.4.6, 3.18.4.11 and 3.21.1.18).

This test verifies that the transponder(1) correctly reports the Crosslink Capability (CC) in DF=0 replies and (2) decodes the DS field in UF=0 interrogations and correctly responds with the content of the Ground Initiated Comm-B register in the MV field of the corresponding DF=16 reply.

a. Interrogate the transponder with UF=0, RL=0 interrogations.

   Verify that the CC field (bit 7) is a ONE in each DF=0 reply requested.

b. Generate data for each defined Ground Initiated Comm B message for each of the Comm-B registers that can be controlled via an interface or are internal to the transponder. The data content for each register should be unique so that it can be distinguished from all others. Interrogate the transponder with UF=0, RL=1 and all combination of DS (1-255). Verify that the contents of the MV field of each DF=16 reply (whose register could be loaded with a test message) matches the contents of the corresponding Comm-B register requested.

c. During the Comm-B protocol test procedure (Procedure#18) or as an extension of the above test, use an ACAS Crosslink type interrogation to extract the Ground-Initiated Comm-B registers in order to verify the Crosslink protocol operates and correctly reports the proper ground-initiated Comm-B data as the transponder changes Comm-B protocol state (if done as part of Procedure#18, interrogate with UF=0, RL=1, DS= 1-255 when interrogating with ground MB extraction).

5.5.8.44 Procedure #40 - Mode S Transponder Hijack Mode (2.7)

This procedure is only applicable to transponders that support the Hijack Mode.

Part 1 of this procedure verifies that the transponder intended for a Dual Antenna System and Dual Diversity Transponder Configuration properly executes all the Hijack Mode Entry requirements specified in 2.7 for the Mode S Transponder Hijack Mode.

Part 2 of this procedure verifies that the transponder intended for a Single Antenna System and Dual Diversity Transponder Configuration properly executes all the Hijack Mode Entry requirements specified in 2.7 for the Mode S Transponder Hijack Mode.

Parts 3 and 4 of this procedure tests the functions of the Hijack Modes and contains the actual tests which are common to both types of installation configuration. These tests are called out specifically in Parts 1 and 2 as needed.

Part 5 of this procedure tests the power interrupt operations of the Hijack Modes.

NOTE: *This entire procedure assumes that the transponder is configured such that the Air/Ground discrete inputs are being used to inhibit replies in accordance with 2.5 d.*

5.5.8.44.1 Part 1 - Dual Antenna System and Dual Diversity Transponder Configuration

NOTE: *This procedure applies* to the transponder in a Dual Antenna Systems and Dual Diversity Transponder *configuration.*

a. Initial State = Active On

   With the transponder being in the Active On and Airborne states and **NOT** in the Hijack Mode:

© EUROCAE, 2003

Draft change proposal[245] after WG 49 meeting 4

(1). Normal Non-Hijack Operation (initial test state)

Provide the transponder with a 4096 Identity Code of “7777” and a Sensitivity Level Control (SLC) of “0” decimal, and **NO** SPI. Provide the transponder with an altitude input of 8,000 feet. Ensure that the altitude reporting function of the transponder is **NOT** inhibited.

Interrogate the transponder with Mode-A, Mode-C, Mode S All-Call, Mode S-only All-Call, Mode S UF = 4, 5, 20, and 21 interrogations for a minimum period of 20 seconds.

Verify that the transponder:

(a). Replies to all Mode-A interrogations with the 4096 Identity Code of “7777” and **NO** SPI Pulse.

(b). Replies to all Mode-C interrogations with an encoded altitude of 8,000 feet.

(c). Replies to all Mode S All-Call and Mode S-only All-Call interrogations with an appropriate DF=11 Mode S reply.

(d). Replies to all UF = 4, UF = 20 Mode-S interrogations with an altitude of 8,000 feet.

(e). Replies to all UF = 5, UF = 21 Mode-S interrogations with an ID field of “7777”.

(f). Properly provides the on-board TCAS (if TCAS equipped) with an SLC = 0 decimal via the Transponder/TCAS interface

(g). Properly provides the on-board TCAS (if TCAS equipped) with a 4096 Identity Code set to “7777”.

(h). Is **NOT** indicating the Hijack mode.

(2). Standard “7500” Code Entry (2.7.2, 2.7.2.1.1 b)

With the transponder in the Active On and Airborne states, provide the transponder with a 4096 Identity Code of “7500” and a Sensitivity Level Control (SLC) of “0” decimal, and **NO** SPI. Provide the transponder with an altitude input of 8,000 feet.

(a). Approximately 10 seconds after providing the 4096 Identity Code of “7500”, verify the transponder has entered the Active Hijack mode by proceeding to Part 3 of these test procedures and performing all the Airborne tests as called out in Part 3 a.

(b). Provide the transponder with an altitude input of 500 feet and set the transponder to the On-Ground state.

Proceed to Part 3 of these test procedures and exit the Hijack Mode as called out in Part 3 b. (5).

(c). Provide the transponder with a 4096 Identity Code of “7500”.

Approximately 10 seconds after providing the 4096 Identity Code of “7500”, verify that the transponder has entered the Active Hijack mode by proceeding to Part 3 of these test procedures and performing all the On-Ground tests as called out in Part 3.b.

(3). “7500” Code Entry with SPI (2.7.2.2, 2.7.2.2.1.a)

With the transponder in the Active On and Airborne states, provide the transponder with a 4096 Identity Code of “7500” and a Sensitivity Level Control (SLC) of “0” decimal. Provide the transponder with an altitude input of 8,000 feet. As soon as possible, thereafter, initiate the SPI (Ident) function.

© EUROCAE, 2003

(a). Immediately after providing the SPI function, verify the transponder has entered the Active Hijack mode by proceeding to Part 3 of these test procedures and performing the Airborne General Requirements tests as called out in Part 3.a.(1).

(b). Provide the transponder with an altitude input of 500 feet and set the transponder to the On-Ground state.

Proceed to Part 3 of these test procedures and exit the Hijack Mode as called out in Part 3.b.(5).

(c). Provide the transponder with a 4096 Identity Code of “7500”. As soon as possible, thereafter, initiate the SPI (Ident) function.

Immediately after providing the SPI function, verify that the transponder has entered the Active Hijack mode by proceeding to Part 3 of these test procedures and performing the On-Ground General Requirements tests as called out in Part 3.b.(1).

(d). Exit the Hijack Mode as called out in Part 3.b.(5). of these test procedures.

(4). Hijack Mode Discrete Initialization (2.7.2.3, 2.7.2.3.1.a)

With the transponder in the Active On and Airborne states, provide the transponder with a 4096 Identity Code of “7777” and a Sensitivity Level Control (SLC) of “0” decimal. Provide the transponder with an altitude input of 8,000 feet. Activate the Hijack Mode Discrete function for approximately one second, then deactivate the Hijack Mode Discrete function.

(a). Immediately after activating the Hijack Mode Discrete function, verify that the transponder has entered the Active Hijack mode by proceeding to Part 3 of these test procedures and performing the Airborne General Requirements tests as called out in Part 3.a.(1).

(b). Provide the transponder with an altitude input of 500 feet and set the transponder to the On-Ground state.

Proceed to Part 3 of these test procedures and exit the Hijack Mode as called out in Part 3.b.(5).

(c). Activate the Hijack Mode Discrete function for approximately one second, then deactivate the Hijack Mode Discrete function.

Immediately after activating the Hijack Mode Discrete function, verify that the transponder has entered the Active Hijack mode by proceeding to Part 3 of these test procedures and performing the On-Ground General Requirements tests as called out in Part 3.b.(1).

(d). Exit the Hijack Mode as called out in Part 3.b.(5). of these test procedures.

b. Initial State = Standby

With the transponder being in the Standby and Airborne states and **NOT** in the Hijack Mode:

(1). <u>Normal Non-Hijack Operation</u> (initial test state)

Provide the transponder with a 4096 Identity Code of “7777” and a Sensitivity Level Control (SLC) of “1” decimal, and **NO** SPI. Provide the transponder with an altitude input of 8,000 feet.

Interrogate the transponder with Mode-A, Mode-C, Mode S All-Call, Mode S-only All-Call, Mode S UF = 4, 5, 20, and 21 interrogations for a minimum period of 20 seconds.

© EUROCAE, 2003

Verify that the transponder:

(a). Does **NOT** reply to any of the interrogations.

(b). Does **NOT** emit squitter transmissions.

(c). Does **NOT** indicate that it **IS** in the Standby Hijack Mode.

(2). Standard "7500" Code Entry (2.7.2.1, 2.7.2.1.1.b)

With the transponder in the Standby and Airborne states, provide the transponder with a 4096 Identity Code of "7500" and a Sensitivity Level Control (SLC) of "1" decimal, and **NO** SPI. Provide the transponder with an altitude input of 8,000 feet.

(a). Approximately 10 seconds after providing the 4096 Identity Code of "7500", verify that the transponder has entered the Standby Hijack mode by proceeding to Part 4 of these test procedures and performing all the Airborne tests as called out in Part 4.a.

(b). Provide the transponder with an altitude input of 500 feet and set the transponder to the On-Ground state.

Proceed to Part 4 of these test procedures and exit the Hijack Mode as called out in Part 4.b.(4).

(c). Provide the transponder with a 4096 Identity Code of "7500".

Approximately 10 seconds after providing the 4096 Identity Code of "7500", verify that the transponder has entered the Standby Hijack mode by proceeding to Part 4 of these test procedures and performing all the On-Ground tests as called out in Part 4.b.

(3). "7500" Code Entry with SPI (2.7.2.2, 2.7.2.2.1.b)

With the transponder in the Standby and Airborne states, provide the transponder with a 4096 Identity Code of "7500" and a Sensitivity Level Control (SLC) of "1" decimal. Provide the transponder with an altitude input of 8,000 feet. As soon as possible, thereafter, initiate the SPI (Ident) function.

(a). Immediately after providing the SPI function, verify that the transponder has entered the Standby Hijack mode by proceeding to Part 4 of these test procedures and performing the Airborne General Requirements tests as called out in Part 4.a.(1).

(b). Provide the transponder with an altitude input of 500 feet and set the transponder to the On-Ground state.

Proceed to Part 4 of these test procedures and exit the Hijack Mode as called out in Part 4.b.(4).

(c). Provide the transponder with a 4096 Identity Code of "7500". As soon as possible, thereafter, initiate the SPI (Ident) function.

Immediately after providing the SPI function, verify that the transponder has entered the Standby Hijack mode by proceeding to Part 4 of these test procedures and performing the On-Ground General Requirements tests as called out in Part 4.b.(1).

(d). Exit the Hijack Mode as called out in Part 4.b.(4). of these test procedures.

(4). Hijack Mode Discrete Initialization (2.7.2.3, 2.7.2.3.1.b)

With the transponder in the Standby and Airborne states, provide the transponder with a 4096 Identity Code of "7777" and a Sensitivity Level Control (SLC) of "1" decimal. Provide the transponder with an altitude input of 8,000 feet. Activate the Hijack Mode Discrete function for approximately one second, then deactivate the Hijack Mode Discrete function.

© EUROCAE, 2003

(a). Immediately after activating the Hijack Mode Discrete function, verify that the transponder has entered the Standby Hijack mode by proceeding to Part 4 of these test procedures and performing the Airborne General Requirements tests as called out in Part 4.a.(1).

(b). Provide the transponder with an altitude input of 500 feet and set the transponder to the On-Ground state.

Proceed to Part 4 of these test procedures and exit the Hijack Mode as called out in Part 4.b.(4).

(c). Activate the Hijack Mode Discrete function for approximately one second, then deactivate the Hijack Mode Discrete function.

Immediately after activating the Hijack Mode Discrete function, verify that the transponder has entered the Standby Hijack mode by proceeding to Part 4 of these test procedures and performing the On-Ground General Requirements tests as called out in Part 4.b.(1).

(d). Exit the Hijack Mode as called out in Part 4.b.(4). of these test procedures.

5.5.8.44.2 Part 2 - Single Antenna System and Dual Diversity Transponder Configuration

NOTE: *This procedure applies to the transponder in a Single Antenna System and Dual Diversity Transponder configuration.*

a. Initial State = Active On

With the transponder being in the Active On and Airborne states and **NOT** in the Hijack Mode:

(1). <u>Normal Non-Hijack Operation</u> (initial test state)

Provide the transponder with a 4096 Identity Code of “7777” and a Sensitivity Level Control (SLC) of “0” decimal, and **NO** SPI. Provide the transponder with an altitude input of 8,000 feet. Ensure that the altitude reporting function of the transponder is **NOT** inhibited.

Interrogate the transponder with Mode-A, Mode-C, Mode S All-Call, Mode S-only All-Call, Mode S UF = 4, 5, 20, and 21 interrogations for a minimum period of 20 seconds.

Verify that the transponder:

(a). Replies to all Mode-A interrogations with the 4096 Identity Code of “7777” and **NO** SPI Pulse.

(b). Replies to all Mode-C interrogations with an encoded altitude of 8,000 feet.

(c). Replies to all Mode S All-Call and Mode S-only All-Call interrogations with an appropriate DF=11 Mode S reply.

(d). Replies to all UF = 4, UF = 20 Mode-S interrogations with an altitude of 8,000 feet.

(e). Replies to all UF = 5, UF = 21 Mode-S interrogations with an ID field of “7777”.

(f). Properly provides the on-board TCAS (if TCAS equipped) with an SLC = 0 decimal via the Transponder/TCAS interface

(g). Properly provides the on-board TCAS (if TCAS equipped) with a 4096 Identity Code set to “7777”.

(h). Is **NOT** indicating the Hijack mode.

© EUROCAE, 2003

(2). Standard "7500" Code Entry (2.7.2.1, 2.7.2.1.2.a)

With the transponder in the Active On and Airborne states, provide the transponder with a 4096 Identity Code of "7500" and a Sensitivity Level Control (SLC) of "0" decimal, and **NO** SPI. Provide the transponder with an altitude input of 8,000 feet.

(a). Approximately 10 seconds after providing the 4096 Identity Code of "7500", verify the transponder has entered the Active Hijack mode by proceeding to Part 3 of these test procedures and performing all the Airborne tests as called out in Part 3.a.

(b). Provide the transponder with an altitude input of 500 feet and set the transponder to the On-Ground state.

Proceed to Part 3 of these test procedures and exit the Hijack Mode as called out in Part 3.b.(5).

(c). Provide the transponder with a 4096 Identity Code of "7500".

Approximately 10 seconds after providing the 4096 Identity Code of "7500", verify that the transponder has entered the Active Hijack mode by proceeding to Part 3 of these test procedures and performing all the On-Ground tests as called out in Part 3.b.

(3). "7500" Code Entry with SPI (2.7.2.2, 2.7.2.2.2.a)

With the transponder in the Active On and Airborne states, provide the transponder with a 4096 Identity Code of "7500" and a Sensitivity Level Control (SLC) of "0" decimal. Provide the transponder with an altitude input of 8,000 feet. As soon as possible, thereafter, initiate the SPI (Ident) function.

(a). Immediately after providing the SPI function, verify that the transponder has entered the Active Hijack mode by proceeding to Part 3 of these test procedures and performing the Airborne General Requirements tests as called out in Part 3.a.(1).

(b). Provide the transponder with an altitude input of 500 feet and set the transponder to the On-Ground state.

Proceed to Part 3 of these test procedures and exit the Hijack Mode as called out in Part 3.b.(5).

(c). Provide the transponder with a 4096 Identity Code of "7500". As soon as possible, thereafter, initiate the SPI (Ident) function.

Immediately after providing the SPI function, verify that the transponder has entered the Active Hijack mode by proceeding to Part 3 of these test procedures and performing the On-Ground General Requirements tests as called out in Part 3.b.(1).

(d). Exit the Hijack Mode as called out in Part 3.b.(5). of these test procedures.

(4). Hijack Mode Discrete Initialization (2.7.2.3, 2.7.2.3.2.a)

With the transponder in the Active On and Airborne states, provide the transponder with a 4096 Identity Code of "7777" and a Sensitivity Level Control (SLC) of "0" decimal. Provide the transponder with an altitude input of 8,000 feet. Activate the Hijack Mode Discrete function for approximately one second, then deactivate the Hijack Mode Discrete function.

(a). Immediately after activating the Hijack Mode Discrete function, verify that the transponder has entered the Active Hijack mode by proceeding to Part 3 of these test procedures and performing the Airborne General Requirements tests as called out in Part 3.a.(1).

© EUROCAE, 2003

(b). Provide the transponder with an altitude input of 500 feet and set the transponder to the On-Ground state.

Proceed to Part 3 of these test procedures and exit the Hijack Mode as called out in Part 3.b.(5).

(c). Activate the Hijack Mode Discrete function for approximately one second, then deactivate the Hijack Mode Discrete function.

Immediately after activating the Hijack Mode Discrete function, verify that the transponder has entered the Active Hijack mode by proceeding to Part 3 of these test procedures and performing the On-Ground General Requirements tests as called out in Part 3.b.(1).

(d). Exit the Hijack Mode as called out in Part 3.b.(5). of these test procedures.

b. Initial State = Standby

With the transponder being in the Standby and Airborne states and **NOT** in the Hijack Mode:

(1). <u>Normal Non-Hijack Operation</u> (initial test state)

Provide the transponder with a 4096 Identity Code of “7777” and a Sensitivity Level Control (SLC) of “0” decimal, and **NO** SPI. Provide the transponder with an altitude input of 8,000 feet.

Interrogate the transponder with Mode-A, Mode-C, Mode S All-Call, Mode S-only All-Call, Mode S UF = 4, 5, 20, and 21 interrogations for a minimum period of 20 seconds.

Verify that the transponder:

(a). Does **NOT** reply to any of the interrogations.

(b). Does **NOT** emit squitter transmissions.

(c). Does **NOT** indicate that it **IS** in the Active Hijack Mode.

(2). <u>Standard “7500” Code Entry</u> (2.7.2.1, 2.7.2.1.2.b)

With the transponder in the Standby and Airborne states, provide the transponder with a 4096 Identity Code of “7500” and a Sensitivity Level Control (SLC) of “0” decimal, and **NO** SPI. Provide the transponder with an altitude input of 8,000 feet.

(a). Approximately 10 seconds after providing the 4096 Identity Code of “7500”, verify that the transponder has entered the Active Hijack mode by proceeding to Part 3 of these test procedures and performing all the Airborne tests as called out in Part 3.a.

(b). Provide the transponder with an altitude input of 500 feet and set the transponder to the On-Ground state.

Proceed to Part 3 of these test procedures and exit the Hijack Mode as called out in Part 3.b.(5).

(c). Set the transponder to the Standby state and provide the transponder with a 4096 Identity Code of “7500”.

Approximately 10 seconds after providing the 4096 Identity Code of “7500”, verify that the transponder has entered the Active Hijack mode by proceeding to Part 3 of these test procedures and performing all the On-Ground tests as called out in Part 3.b.

© EUROCAE, 2003

(3). "7500" Code Entry with SPI (2.7.2.2, 2.7.2.2.2.b)

With the transponder in the Standby and Airborne states, provide the transponder with a 4096 Identity Code of "7500" and a Sensitivity Level Control (SLC) of "0" decimal. Provide the transponder with an altitude input of 8,000 feet. As soon as possible, thereafter, initiate the SPI (Ident) function.

(a). Immediately after providing the SPI function, verify that the transponder has entered the Active Hijack mode by proceeding to Part 3 of these test procedures and performing the Airborne General Requirements tests as called out in Part 3.a.(1).

(b). Provide the transponder with an altitude input of 500 feet and set the transponder to the On-Ground state.

Proceed to Part 3 of these test procedures and exit the Hijack Mode as called out in Part 3.b.(5).

(c). Set the transponder to the Standby state and provide the transponder with a 4096 Identity Code of "7500". As soon as possible, thereafter, initiate the SPI (Ident) function.

Immediately after providing the SPI function, verify that the transponder has entered the Active Hijack mode by proceeding to Part 3 of these test procedures and performing the On-Ground General Requirements tests as called out in Part 3.b.(1).

(d). Exit the Hijack Mode as called out in Part 3.b.(5). of these test procedures.

(4). Hijack Mode Discrete Initialization (2.7.2.3, 2.7.2.3.2.b)

With the transponder in the Standby and Airborne states, provide the transponder with a 4096 Identity Code of "7777" and a Sensitivity Level Control (SLC) of "0" decimal. Provide the transponder with an altitude input of 8,000 feet. Activate the Hijack Mode Discrete function for approximately one second, then deactivate the Hijack Mode Discrete function.

(a). Immediately after activating the Hijack Mode Discrete function, verify that the transponder has entered the Active Hijack mode by proceeding to Part 3 of these test procedures and performing the Airborne General Requirements tests as called out in Part 3.a.(1).

(b). Provide the transponder with an altitude input of 500 feet and set the transponder to the On-Ground state.

Proceed to Part 3 of these test procedures and exit the Hijack Mode as called out in Part 3.b.(5).

(c). Set the transponder to the Standby state. Activate the Hijack Mode Discrete function for approximately one second, then deactivate the Hijack Mode Discrete function.

Immediately after activating the Hijack Mode Discrete function, verify that the transponder has entered the Active Hijack mode by proceeding to Part 3 of these test procedures and performing the On-Ground General Requirements tests as called out in Part 3.b.(1).

(d). Exit the Hijack Mode as called out in Part 3.b.(5). of these test procedures.

© EUROCAE, 2003

Draft change proposal[252] after WG 49 meeting 4

5.5.8.44.3 Part 3 - Active Hijack Mode Operation (2.7.3)

NOTE: *This procedure applies to the **Active On** transponder in a Dual Antenna Systems and Dual Diversity Transponder configuration and to both transponders in a Single Antenna System and Dual Diversity Transponder configuration.*

a. Airborne Testing

With the transponder being in the Active Hijack mode and the Airborne state, provide the transponder with a Sensitivity Level Control (SLC) of “0” decimal and an altitude input of 8,000 feet.

(1). General Requirements Tests (2.7.3.1.a, b, 2.7.5.a)

Immediately after the transponder enters Active Hijack mode, interrogate the transponder with Mode-A, Mode S All-Call, Mode S-only All-Call, Mode S UF = 5, and UF = 21 interrogations for a minimum period of 20 seconds.

Verify that the transponder:

(a). Replies to all Mode-A interrogations with the 4096 Identity Code of “7500”.

(b). Replies to all Mode-A interrogations with the SPI Pulse set for a period of 18 +/- 1 seconds.

(c). Replies to all Mode S All-Call and Mode S-only All-Call interrogations with an appropriate DF=11 Mode S reply.

(d). Replies to all UF = 5, UF = 21 Mode-S interrogations with an ID field of “7500”.

(e). Continues to emit squitter transmissions.

(f). Properly indicates that it IS in the Active Hijack Mode.

(g). Properly indicates the Alert Status in the "FS" field in accordance with sections 3.18.4.12 and 3.20.2.7.

(2). Altitude Reporting Requirements Tests (2.7.3.1.1)

(a). Interrogate the transponder with Mode-C, Mode S UF = 4 and UF = 20 interrogations for a minimum period of 20 seconds.

Verify that the transponder:

[1]. Replies to all Mode-C interrogations with an encoded altitude of 8,000 feet.

[2]. Replies to all UF = 4, UF = 20 Mode-S interrogations with an altitude of 8,000 feet.

(b). Attempt to inhibit the Altitude Reporting function of the transponder. Interrogate the transponder with Mode-C, Mode S UF = 4 and UF = 20 interrogations for a minimum period of 20 seconds.

Verify that the transponder:

[1]. Replies to all Mode-C interrogations with an encoded altitude of 8,000 feet.

[2]. Replies to all UF = 4, UF = 20 Mode-S interrogations with an altitude of 8,000 feet.

(c). Provide the transponder with an INVALID altitude input of 10,000 feet. Interrogate the transponder with Mode-C, Mode S UF = 4 and UF = 20 interrogations for a minimum period of 20 seconds.

© EUROCAE, 2003

Verify that the transponder:

[1]. Replies to all Mode-C interrogations with framing pulses only.

[2]. Replies to all UF = 4, UF = 20 Mode-S interrogations with an Altitude Field (AC) of all ZERO's.

(d). Restore the Valid altitude input of 8,000 feet.

(3). <u>TCAS Communication Requirements Tests</u> (2.7.3.1.2)

(a). Provide the transponder with a Sensitivity Level Control (SLC) of "1" decimal.

Verify that the transponder (if TCAS equipped):

[1]. Properly provides the on-board TCAS with an SLC = 1 decimal via the Transponder/TCAS interface

[2]. Properly provides the on-board TCAS with a 4096 Identity Code set to "7500".

(b). Provide the transponder with a Sensitivity Level Control (SLC) of "2" decimal.

Verify that the transponder (if TCAS equipped) properly provides the on-board TCAS with an SLC = 2 decimal via the Transponder/TCAS interface.

(c). Provide the transponder with a Sensitivity Level Control (SLC) of "0" decimal.

Verify that the transponder (if TCAS equipped) properly provides the on-board TCAS with an SLC = 2 decimal via the Transponder/TCAS interface

(4). <u>Loss of Control and Attempted Control Changes Tests</u> (2.7.3.1.c, and 2.7.3.3)

(a). Disable the capability to provide the transponder with a 4096 Identity Code of "7500", a Sensitivity Level Control (SLC) and other control functions. Ensure that the altitude reporting function of the transponder **IS** inhibited. (Note that if the Altitude Reporting function is selected via the control function, it should be inhibited automatically by removal of the control function capability).

Interrogate the transponder with Mode-A, Mode-C, Mode S All-Call, Mode S-only All-Call, Mode S UF = 4, 5, 20, and 21 interrogations for a minimum period of 20 seconds.

Verify that the transponder:

[1]. Replies to all Mode-A interrogations with the 4096 Identity Code of "7500" and **NO** SPI pulse.

[2]. Replies to all Mode-C interrogations with an encoded altitude of 8,000 feet.

[3]. Replies to all Mode S All-Call and Mode S-only All-Call interrogations with an appropriate DF=11 Mode S reply.

[4]. Replies to all UF = 4, UF = 20 Mode-S interrogations with an altitude of 8,000 feet..

[5]. Replies to all UF = 5, UF = 21 Mode-S interrogations with an ID field of "7500".

[6]. Continues to emit squitter transmissions.

© EUROCAE, 2003

[7]. Does **NOT** provide TCAS with SLC, 4096 Identity Code or any other Control information since the Control Function has been lost.

NOTE: *The loss of control information to the TCAS Computer may result in a TCAS System fail if the test configuration is integrated with TCAS.*

[8]. Properly indicates that it **IS** in the Active Hijack Mode.

(b). Restore the control function capability to the transponder and set the control function to a setting that attempts to place the transponder into the Standby state. Interrogate the transponder with Mode-A, Mode S UF = 5 and 21 interrogations for a minimum period of 20 seconds.

Verify that the transponder:

[1]. Replies to all Mode-A interrogations with the 4096 Identity Code of “7500” and **NO** SPI pulse.

[2]. Replies to all UF = 5, UF = 21 Mode-S interrogations with an ID field of “7500”.

[3]. Properly indicates that it **IS** in the Active Hijack Mode.

(c). Provide the transponder with a 4096 Identity Code of “1200”. Interrogate the transponder with Mode-A, Mode S UF = 5 and 21 interrogations for a minimum period of 20 seconds.

Verify that the transponder:

[1]. Replies to all Mode-A interrogations with the 4096 Identity Code of “7500” and **NO** SPI pulse.

[2]. Replies to all UF = 5, UF = 21 Mode-S interrogations with an ID field of “7500”.

[3]. Properly indicates that it **IS** in the Active Hijack Mode.

(d). Provide the transponder with a valid altitude of 10,000 feet on the Alternate Air Data Source. Command the transponder to use the Alternate Air Data Source. Interrogate the transponder with Mode-C, Mode S UF = 4 and 20 interrogations for a minimum period of 20 seconds.

Verify that the transponder:

[1]. Replies to all Mode-C interrogations with an encoded altitude of 8,000 feet.

[2]. Replies to all UF = 4, UF = 20 Mode-S interrogations with an altitude of 8,000 feet..

[3]. Properly indicates that it IS in the Active Hijack Mode.

(e). Command the transponder to Functional Test mode. Interrogate the transponder with Mode-A, Mode S UF = 5 and 21 interrogations for a minimum period of 20 seconds.

Verify that the transponder:

[1]. Replies to all Mode-A interrogations with the 4096 Identity Code of “7500” and **NO** SPI pulse.

[2]. Replies to all UF = 5, UF = 21 Mode-S interrogations with an ID field of “7500”.

[3]. Properly indicates that it IS in the Active Hijack Mode.

(f). Activate the SPI command to the transponder. Interrogate the transponder with Mode-A, Mode S UF =4, 5, 20 and 21 interrogations for a minimum period of 20 seconds.

© EUROCAE, 2003

Verify that the transponder:

[1]. Replies to all Mode-A interrogations with the 4096 Identity Code of “7500” and **NO** SPI pulse.

[2]. Replies to all UF = 5, UF = 21 Mode-S interrogations with an ID field of “7500”.

[3]. Indicates that the SPI is **NOT** active in the FS field of DF=4, 5, 20 and 21 replies.

[4]. Properly indicates that it **IS** in the Active Hijack Mode.

(5). Attempted Hijack Mode Exit Verification (2.7.6.1)

Activate the means to exit the Hijack Mode.

Interrogate the transponder with Mode-A, Mode-C, Mode S All-Call, Mode S-only All-Call, Mode S UF = 4, 5, 20, and 21 interrogations for a minimum period of 20 seconds.

Verify that the transponder:

(a). Replies to all Mode-A interrogations with the 4096 Identity Code of “7500” and **NO** SPI pulse.

(b). Replies to all Mode-C interrogations with an encoded altitude of 8,000 feet.

(c). Replies to all Mode S All-Call and Mode S-only All-Call interrogations with an appropriate DF=11 Mode S reply.

(d). Replies to all UF = 4, UF = 20 Mode-S interrogations with an altitude of 8,000 feet.

(e). Replies to all UF = 5, UF = 21 Mode-S interrogations with an ID field of “7500”.

(f). Continues to emit squitter transmissions.

(g). Properly provides the on-board TCAS (if TCAS equipped) with an SLC = 2 decimal via the Transponder/TCAS interface.

(h). Properly provides the on-board TCAS (if TCAS equipped) with a 4096 Identity Code set to “7500”.

(i). Properly indicates that it IS in the Active Hijack Mode.

b. On-Ground Testing

With the transponder being in the Active Hijack mode and the On-Ground state, provide the transponder with a Sensitivity Level Control (SLC) of “0” decimal and an altitude input of 500 feet.

(1). General Requirements Tests (2.7.3.1.a,b, 2.7.3.2)

Immediately after the transponder enters Active Hijack mode, interrogate the transponder with Mode-A, Mode S All-Call, Mode S-only All-Call, Mode S UF = 5 and 21 interrogations for a minimum period of 20 seconds.

Verify that the transponder:

(a). Replies to all Mode-A interrogations with the 4096 Identity Code of “7500” and **NO** SPI pulse.

(b). Replies to all Mode S All-Call and Mode S-only All-Call interrogations with an appropriate DF=11 Mode S reply.

(c). Replies to all UF = 5, UF = 21 Mode-S interrogations with an ID field of “7500”.

© EUROCAE, 2003

(d). Continues to emit squitter transmissions.

(e). Properly indicates that it **IS** in the Active Hijack Mode.

(f). Properly indicates the Alert Status in the "FS" field in accordance with sections 3.18.4.12 and 3.20.2.7.

(2). Altitude Reporting Requirements Tests (2.7.3.1.1)

(a). Interrogate the transponder with Mode-C, Mode S UF = 4 and 20 interrogations for a minimum period of 20 seconds.

Verify that the transponder:

[1]. Replies to all Mode-C interrogations with an encoded altitude of 500 feet.

[2]. Replies to all UF = 4, UF = 20 Mode-S interrogations with an altitude of 500 feet.

(b). Attempt to inhibit the Altitude Reporting function of the transponder. Interrogate the transponder with Mode-C, Mode S UF = 4 and 20 interrogations for a minimum period of 20 seconds.

Verify that the transponder:

[1]. Replies to all Mode-C interrogations with an encoded altitude of 500 feet.

[2]. Replies to all UF = 4, UF = 20 Mode-S interrogations with an altitude of 500 feet.

(c). Provide the transponder with an INVALID altitude input of 1,000 feet. Interrogate the transponder with Mode-C, Mode S UF = 4 and 20 interrogations for a minimum period of 20 seconds.

Verify that the transponder:

[1]. Replies to all Mode-C interrogations framing pulses only.

[2]. Replies to all UF = 4, UF = 20 Mode-S interrogations with an Altitude Field (AC) set to all ZERO's.

(d). Restore the Valid altitude input of 500 feet.

(3). TCAS Communication Requirements Tests (2.7.3.1.2)

(a). Provide the transponder with a Sensitivity Level Control (SLC) of "1" decimal.

Verify that the transponder (if TCAS equipped):

[1]. Properly provides the on-board TCAS with an SLC = 1 decimal via the Transponder/TCAS interface

[2]. Properly provides the on-board TCAS with a 4096 Identity Code set to "7500".

(b). Provide the transponder with a Sensitivity Level Control (SLC) of "2" decimal.

Verify that the transponder (if TCAS equipped) properly provides the on-board TCAS with an SLC = 2 decimal via the Transponder/TCAS interface.

(c). Provide the transponder with a Sensitivity Level Control (SLC) of "0" decimal.

Verify that the transponder (if TCAS equipped) properly provides the on-board TCAS with an SLC = 2 decimal via the Transponder/TCAS interface

© EUROCAE, 2003

Draft change proposal[257] after WG 49 meeting 4

(4). Loss of Control and Attempted Control Changes Tests (2.7.3.1.c, and 2.7.3.3)

(a). Disable the capability to provide the transponder with a 4096 Identity Code of “7500”, a Sensitivity Level Control (SLC) and other control functions. Ensure that the altitude reporting function of the transponder IS inhibited. (Note that if the Altitude Reporting function is selected via the control function, it should be inhibited automatically by removal of the control function capability).

Interrogate the transponder with Mode-A, Mode-C, Mode S All-Call, Mode S-only All-Call, Mode S UF = 4, 5, 20, and 21 interrogations for a minimum period of 20 seconds.

Verify that the transponder:

[1]. Replies to all Mode-A interrogations with the 4096 Identity Code of “7500” and **NO** SPI pulse.

[2]. Replies to all Mode-C interrogations with an encoded altitude of 500 feet.

[3]. Replies to all Mode S All-Call and Mode S-only All-Call interrogations with an appropriate DF=11 Mode S reply.

[4]. Replies to all UF = 4, UF = 20 Mode-S interrogations with an altitude of 500 feet.

[5]. Replies to all UF = 5, UF = 21 Mode-S interrogations with an ID field of “7500”.

[6]. Continues to emit squitter transmissions.

[7]. Does **NOT** provide TCAS with SLC, 4096 Identity Code or any other Control information since the Control Function has been lost.

NOTE: *The loss of control information to the TCAS Computer may result in a TCAS System fail if the test configuration is integrated with TCAS.*

[8]. Properly indicates that it **IS** in the Active Hijack Mode.

(b). Restore the control function capability to the transponder and set the control function to a setting that attempts to place the transponder into the Standby state. Interrogate the transponder with Mode-A, Mode S UF = 5 and 21 interrogations for a minimum period of 20 seconds.

Verify that the transponder:

[1]. Replies to all Mode-A interrogations with the 4096 Identity Code of “7500” and **NO** SPI pulse.

[2]. Replies to all UF = 5, UF = 21 Mode-S interrogations with an ID field of “7500”.

[3]. Properly indicates that it IS in the Active Hijack Mode.

(c). Provide the transponder with a 4096 Identity Code of “1200”. Interrogate the transponder with Mode-A, Mode S UF = 5 and 21 interrogations for a minimum period of 20 seconds.

Verify that the transponder:

[1]. Replies to all Mode-A interrogations with the 4096 Identity Code of “7500” and **NO** SPI pulse.

[2]. Replies to all UF = 5, UF = 21 Mode-S interrogations with an ID field of “7500”.

[3]. Properly indicates that it **IS** in the Active Hijack Mode.

© EUROCAE, 2003

(d). Provide the transponder with a valid altitude of 1,000 feet on the Alternate Air Data Source. Command the transponder to use the Alternate Air Data Source. Interrogate the transponder with Mode-C, Mode S UF = 4 and 20 interrogations for a minimum period of 20 seconds.

Verify that the transponder:

[1]. Replies to all Mode-C interrogations with an encoded altitude of 500 feet.

[2]. Replies to all UF = 4, UF = 20 Mode-S interrogations with an altitude of 500 feet..

[3]. Properly indicates that it **IS** in the Active Hijack Mode.

(e). Command the transponder to Functional Test mode. Interrogate the transponder with Mode-A, Mode S UF = 5 and 21 interrogations for a minimum period of 20 seconds.

Verify that the transponder:

[1]. Replies to all Mode-A interrogations with the 4096 Identity Code of “7500” and **NO** SPI pulse.

[2]. Replies to all UF = 5, UF = 21 Mode-S interrogations with an ID field of “7500”.

[3]. Properly indicates that it **IS** in the Active Hijack Mode.

(f). Activate the SPI command to the transponder. Interrogate the transponder with Mode-A, Mode S UF = 4, 5, 20, and 21 interrogations for a minimum period of 20 seconds.

Verify that the transponder:

[1]. Replies to all Mode-A interrogations with the 4096 Identity Code of “7500” and **NO** SPI pulse.

[2]. Replies to all UF = 5, UF = 21 Mode-S interrogations with an ID field of “7500”.

[3]. Indicates that the SPI is **NOT** active in the FS field of DF=4, 5, 20 and 21 replies.

[4]. Properly indicates that it **IS** in the Active Hijack Mode.

(5). Hijack Mode Exit Verification (2.7.6.2)

Provide the transponder with a 4096 Identity Code of “7777”. Set the control function to an Active On setting. Activate the means to exit the Hijack Mode.

Interrogate the transponder with Mode-A, Mode-C, Mode S All-Call, Mode S-only All-Call, Mode S UF = 4, 5, 20, and 21 interrogations for a minimum period of 20 seconds.

Verify that the transponder:

(a). Does **NOT** reply to Mode-A, Mode-C, Mode S All-Call, or Mode S-only All-Call interrogations.

(b). Replies to all UF = 5, UF = 21 Mode-S interrogations with an ID field of “7777”.

(c). Indicates that the Hijack Mode Exit has been accomplished successfully.

(d). Properly indicates that it **IS NOT** in the Active Hijack Mode.

© EUROCAE, 2003

Draft change proposal[259] after WG 49 meeting 4

5.5.8.44.4 Part 4 - Standby Hijack Mode Operation (2.7.4)

NOTE: *This procedure applies to the **Standby** transponder in a Dual Antenna Systems and Dual Diversity Transponder configuration.*

a. Airborne Testing

With the transponder being in the Standby Hijack mode and Airborne states, provide the transponder with a Sensitivity Level Control (SLC) of “1” decimal, and an altitude input of 8,000 feet.

(1). General Requirements Tests (2.7.4.1.b, c, d, 2.7.5.b)

Immediately after the transponder enters Standby Hijack mode, interrogate the transponder with Mode-A, Mode-C, Mode S All-Call, Mode S-only All-Call, Mode S UF = 4, 5, 20, and 21 interrogations for a minimum period of 20 seconds.

Verify that the transponder:

(a). Does **NOT** reply to any of the interrogations.

(b). Does **NOT** emit squitter transmissions.

(c). Properly indicates that it **IS** in the Standby Hijack Mode.

(2). TCAS Communication Requirements Tests (2.7.4.2)

(a). Provide the transponder with a Sensitivity Level Control (SLC) of “1” decimal.

Verify that the transponder (if TCAS equipped):

[1]. Properly provides the on-board TCAS with an SLC =–1 decimal via the Transponder/TCAS interface

[2]. Properly provides the on-board TCAS with a 4096 Identity Code set to “7500”.

(b). Provide the transponder with a Sensitivity Level Control (SLC) of “2” decimal.

Verify that the transponder (if TCAS equipped) properly provides the on-board TCAS with an SLC = 2 decimal via the Transponder/TCAS interface

(c). Provide the transponder with a Sensitivity Level Control (SLC) of “0” decimal.

Verify that the transponder (if TCAS equipped) properly provides the on-board TCAS with an SLC = 2 decimal via the Transponder/TCAS interface

(3). Loss of Control and Attempted Control Changes Tests (2.7.4.1.a, and 2.7.4.3)

(a). Disable the capability to provide the transponder with a 4096 Identity Code of “7500”, a Sensitivity Level Control (SLC) and other control functions. Interrogate the transponder with Mode-A, Mode-C, Mode S All-Call, Mode S-only All-Call, Mode S UF = 4, 5, 20, and 21 interrogations for a minimum period of 20 seconds.

Verify that the transponder:

[1]. Does **NOT** reply to any of the interrogations.

[2]. Does **NOT** emit squitter transmissions.

[3]. Does **NOT** provide TCAS with SLC, 4096 Identity Code or any other Control information since the Control Function has been lost.

© EUROCAE, 2003

NOTE: *The loss of control information to the TCAS Computer may result in a TCAS System fail if the test configuration is integrated with TCAS.*

[4]. Properly indicates that it **IS** in the Standby Hijack Mode.

(b). Restore the control function capability to the transponder and set the control function to a setting that attempts to place the transponder into the Active On state. Interrogate the transponder with Mode-A, Mode-C, Mode S All-Call, Mode S-only All-Call, Mode S UF = 4, 5, 20, and 21 interrogations for a minimum period of 20 seconds.

Verify that the transponder:

[1]. Does **NOT** reply to any of the interrogations.

[2]. Does **NOT** emit squitter transmissions.

[3]. Properly indicates that it **IS** in the Standby Hijack Mode.

(c). Command the transponder to Functional Test mode. Interrogate the transponder with Mode-A, Mode-C, Mode S All-Call, Mode S-only All-Call, Mode S UF = 4, 5, 20, and 21 interrogations for a minimum period of 20 seconds.

Verify that the transponder:

[1]. Does **NOT** reply to any of the interrogations.

[2]. Does **NOT** emit squitter transmissions.

[3]. Properly indicates that it **IS** in the Standby Hijack Mode.

(4). Attempted Hijack Mode Exit Verification (2.7.6.1)

Activate the means to exit the Standby Hijack Mode.

Interrogate the transponder with Mode-A, Mode-C, Mode S All-Call, Mode S-only All-Call, Mode S UF = 4, 5, 20, and 21 interrogations for a minimum period of 20 seconds.

Verify that the transponder:

(a). Does **NOT** reply to any of the interrogations.

(b). Does **NOT** emit squitter transmissions.

(c). Properly provides the on-board TCAS (if TCAS equipped) with an SLC = 2 decimal via the Transponder/TCAS interface.

(d). Properly provides the on-board TCAS (if TCAS equipped) with a 4096 Identity Code set to “7500”.

(e). Properly indicates that it **IS** in the Standby Hijack Mode.

b. On-Ground Testing

With the transponder being in the Standby Hijack mode and the On-Ground state, provide the transponder with a Sensitivity Level Control (SLC) of “1” decimal and an altitude input of 500 feet.

(1). General Requirements Tests (2.7.4.1.b, c, d, 2.7.5.b)

Immediately after the transponder enters Standby Hijack mode, interrogate the transponder with Mode-A, Mode-C, Mode S All-Call, Mode S-only All-Call, Mode S UF = 4, 5, 20, and 21 interrogations for a minimum period of 20 seconds.

Verify that the transponder:

(a). Does **NOT** reply to any of the interrogations.

(b). Does **NOT** emit squitter transmissions.

(c). Properly indicates that it **IS** in the Standby Hijack Mode.

© EUROCAE, 2003

(2). TCAS Communication Requirements Tests (2.7.4.2)

(a). Provide the transponder with a Sensitivity Level Control (SLC) of "1" decimal.

Verify that the transponder (if TCAS equipped):

[1]. Properly provides the on-board TCAS with an SLC = 1 decimal via the Transponder/TCAS interface

[2]. Properly provides the on-board TCAS with a 4096 Identity Code set to "7500".

(b) Provide the transponder with a Sensitivity Level Control (SLC) of "2" decimal.

Verify that the transponder (if TCAS equipped) properly provides the on-board TCAS with an SLC = 2 decimal via the Transponder/TCAS interface

(c) Provide the transponder with a Sensitivity Level Control (SLC) of "0" decimal.

Verify that the transponder (if TCAS equipped) properly provides the on-board TCAS with an SLC = 2 decimal via the Transponder/TCAS interface

(3). Loss of Control and Attempted Control Changes Tests (2.7.4.1.a, and 2.7.4.3)

(a). Disable the capability to provide the transponder with a 4096 Identity Code of "7500", a Sensitivity Level Control (SLC) and other control functions. Interrogate the transponder with Mode-A, Mode-C, Mode S All-Call, Mode S-only All-Call, Mode S UF = 4, 5, 20, and 21 interrogations for a minimum period of 20 seconds.

Verify that the transponder:

[1]. Does **NOT** reply to any of the interrogations.

[2]. Does **NOT** emit squitter transmissions.

[3]. Does **NOT** provide TCAS with SLC, 4096 Identity Code or any other Control information since the Control Function has been lost.

NOTE: *The loss of control information to the TCAS Computer may result in a TCAS System fail if the test configuration is integrated with TCAS.*

[4]. Properly indicates that it **IS** in the Standby Hijack Mode.

(b). Restore the control function capability to the transponder and set the control function to a setting that attempts to place the transponder into the Active On state. Interrogate the transponder with Mode-A, Mode-C, Mode S All-Call, Mode S-only All-Call, Mode S UF = 4, 5, 20, and 21 interrogations for a minimum period of 20 seconds.

Verify that the transponder:

[1]. Does **NOT** reply to any of the interrogations.

[2]. Does **NOT** emit squitter transmissions.

[3]. Properly indicates that it **IS** in the Standby Hijack Mode.

(c). Command the transponder to Functional Test mode. Interrogate the transponder with Mode-A, Mode-C, Mode S All-Call, Mode S-only All-Call, Mode S UF = 4, 5, 20, and 21 interrogations for a minimum period of 20 seconds.

Verify that the transponder:

© EUROCAE, 2003

[1]. Does **NOT** reply to any of the interrogations.

[2]. Does **NOT** emit squitter transmissions.

[3]. Properly indicates that it **IS** in the Standby Hijack Mode.

(4). Hijack Mode Exit Verification (2.7.6.2)

Provide the transponder with a 4096 Identity Code of "7777". Activate the means to exit the Hijack Mode.

Verify that the transponder:

(a). Indicates that the Hijack Mode Exit has been accomplished successfully.

(b). Properly indicates that it **IS NOT** in the Standby Hijack Mode.

5.5.8.44.5 Part 5 - Power Interrupt Operations

a. Normal Non-Hijack Operation (2.7.5.c,d)

(1). Active On Mode

Set the transponder to the Active On state and **NOT** in the Hijack Mode.

Interrupt the power to the transponder for a period of approximately 1-2 seconds.

Verify that the transponder:

(a). Does **NOT** give a false indication that the Active Hijack mode is active.

(b). Does **NOT** give a false indication that the Standby Hijack mode is active (for transponders intended for installation in a Dual Antenna Systems and Dual Diversity Transponder configuration).

(2). Standby Mode

Set the transponder to the Standby state and **NOT** in the Hijack Mode.

Interrupt the power to the transponder for a period of approximately 1-2 seconds.

Verify that the transponder:

(a). Does **NOT** give a false indication that the Active Hijack mode is active.

(b). Does **NOT** give a false indication that the Standby Hijack mode is active (for transponders intended for installation in a Dual Antenna Systems and Dual Diversity Transponder configuration).

b. Active Hijack Mode (2.7.7)

NOTE: *This procedure applies to the **Active On** transponder in a Dual Antenna Systems and Dual Diversity Transponder configuration and to both transponders in a Single Antenna Systems and Dual Diversity Transponder configuration.*

(1). Hijack Mode Initialization

With the transponder being in the Active On and Airborne states and **NOT** in the Hijack Mode, provide the transponder with a valid altitude input of 8,000 feet and a Sensitivity Level Control (SLC) of "0" decimal. Ensure that the altitude reporting function of the transponder IS inhibited. Then, initiate the Activate Hijack mode via either of the methods identified in Part 1 or Part 2 of these test procedures.

After the transponder has entered the Active Hijack mode, interrogate the transponder with Mode-A, Mode-C, Mode S All-Call, Mode S-only All-Call, Mode S UF = 4, 5, 20, and 21 interrogations for a minimum period of 20 seconds.

© EUROCAE, 2003

Verify that the transponder properly annunciates that it **IS** in the Hijack Mode.

(2). Power Interruption:

Interrupt the power to transponder for a period of approximately 10 seconds. Retain the conditions applied to the transponder in Part 5.b.(1), except set the 4096 Identity Code to “7777”. Then, restore power to the transponder.

Verify that the transponder:

(a). Replies to all Mode-A interrogations with the 4096 Identity Code of “7500”.

(b). Replies to all Mode-A interrogations with the SPI Pulse set for a period of 18 +/- 1 seconds after restoration of power.

(c). Replies to all Mode-C interrogations with an encoded altitude of 8,000 feet.

(d). Replies to all Mode S All-Call and Mode S-only All-Call interrogations with an appropriate DF=11 Mode S reply.

(e). Replies to all UF = 4, UF = 20 Mode-S interrogations with an altitude of 8,000 feet.

(f). Replies to all UF = 5, UF = 21 Mode-S interrogations with an ID field of “7500”.

(g). Properly provides the on-board TCAS (if TCAS equipped) with an SLC = 2 decimal via the Transponder/TCAS interface.

(h). Properly provides the on-board TCAS (if TCAS equipped) with a 4096 Identity Code set to “7500”.

(i). Properly annunciates that it **IS** in the Hijack Mode.

(3). On-Ground Hijack Mode Exit

Set the transponder to the On-Ground state and activate the means to exit the Hijack Mode.

Verify that the transponder:

(a). Indicates that the Hijack Mode Exit has been accomplished successfully.

(b). Properly annunciates that it **IS NOT** in the Active Hijack Mode.

c. Standby Hijack Mode (2.7.7)

NOTE: *This procedure applies to the **Standby** transponder in a Dual Antenna Systems and Dual Diversity Transponders configuration.*

(1). Standby Hijack Mode Initialization

With the transponder being in the Standby and Airborne states and **NOT** in the “Standby Hijack” mode, initiate the Standby Hijack mode via either of the methods identified in Part 1 of these test procedures.

At least 10 seconds after initiating the Hijack Mode, verify that the transponder properly indicates that it **IS** in the Standby Hijack Mode.

(2). Power Interruption:

Interrupt the power to transponder for a period of approximately 10 seconds. Retain the conditions applied to the transponder in Part 5.c.(1), except set the 4096 Identity Code to “7777”. Then, restore power to the transponder.

Verify that the transponder:

(a). Properly annunciates that it **IS** in the Standby Hijack Mode.

(3). On-Ground Hijack Mode Exit

© EUROCAE, 2003

Draft change proposal[264] after WG 49 meeting 4

Set the transponder to the On-Ground state and activate the means to exit the Hijack Mode.

Verify that the transponder:

(a). Indicates that the Hijack Mode Exit has been accomplished successfully.

(b). Properly annunciates that it **IS NOT** in the Standby Hijack Mode.

.

© EUROCAE, 2003

FIGURE 5-1: TEST EQUIPMENT CONNECTION

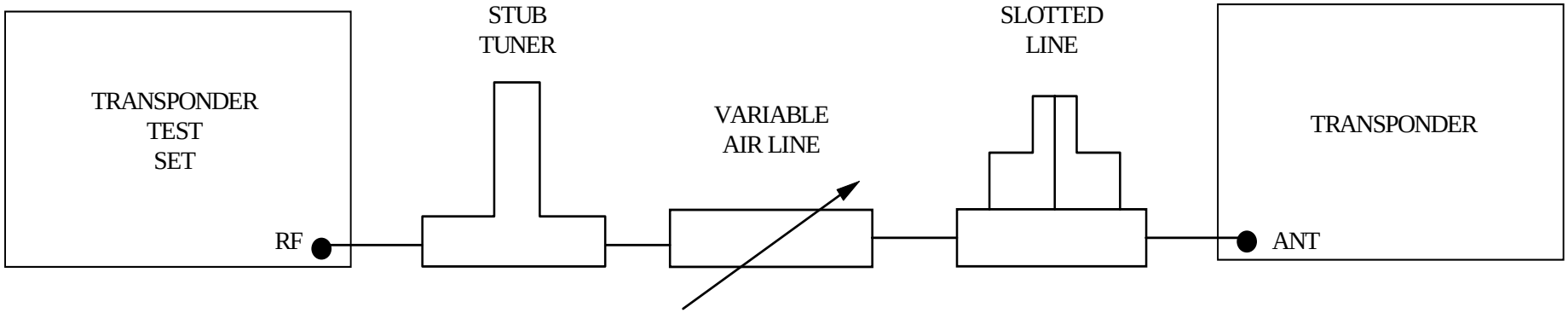

FIGURE 5-2: TEST EQUIPMENT CONNECTION

© EUROCAE, 2003

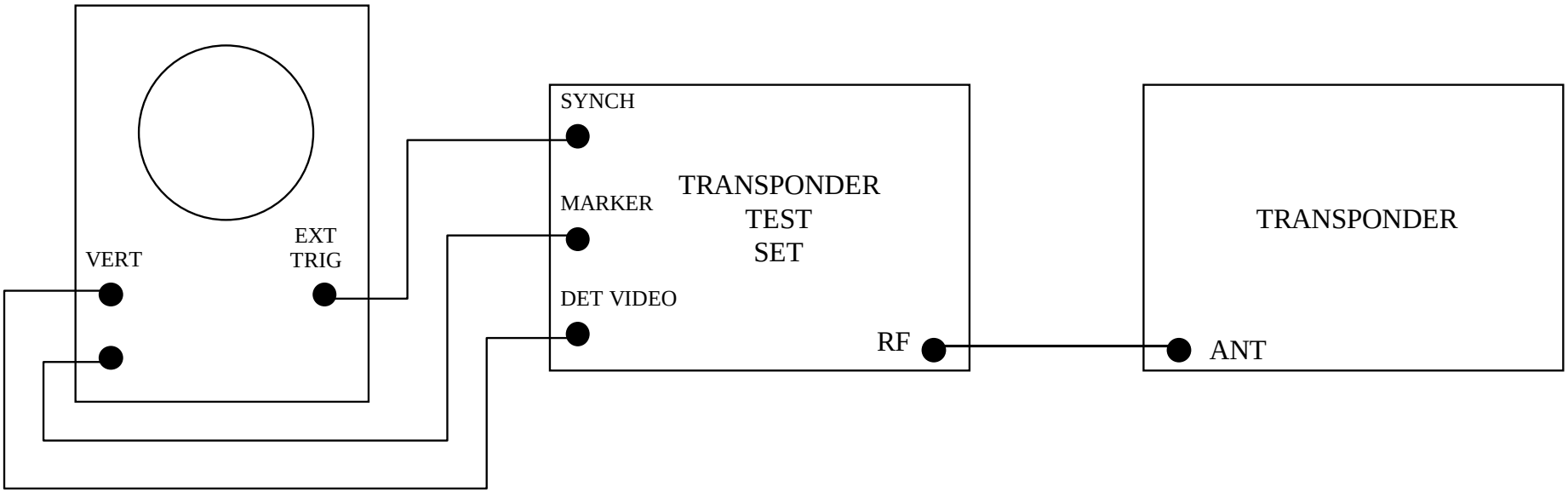

FIGURE 5-3: TEST EQUIPMENT CONNECTION

© EUROCAE, 2003

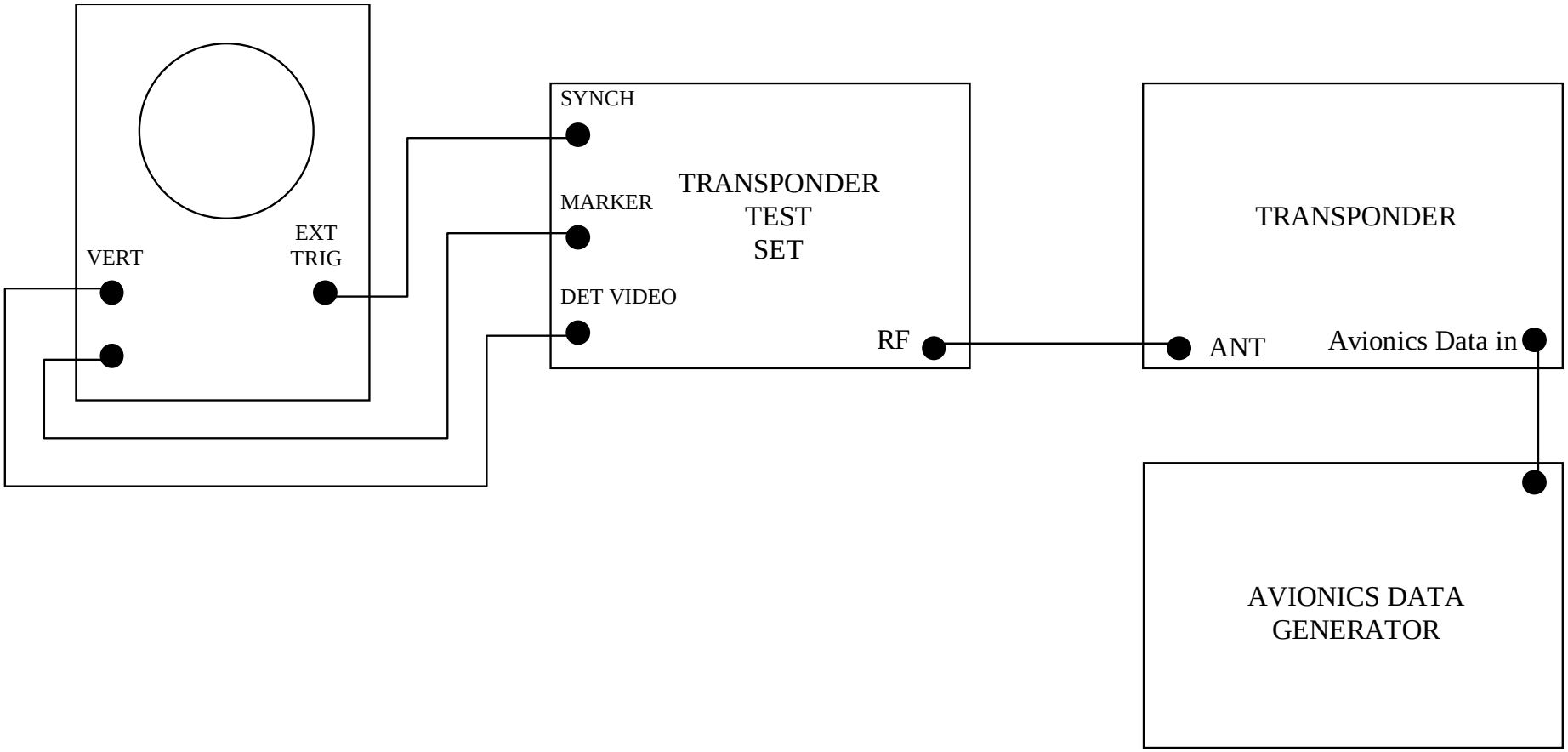

FIGURE 5-3A: TEST EQUIPMENT CONNECTION

© EUROCAE, 2003

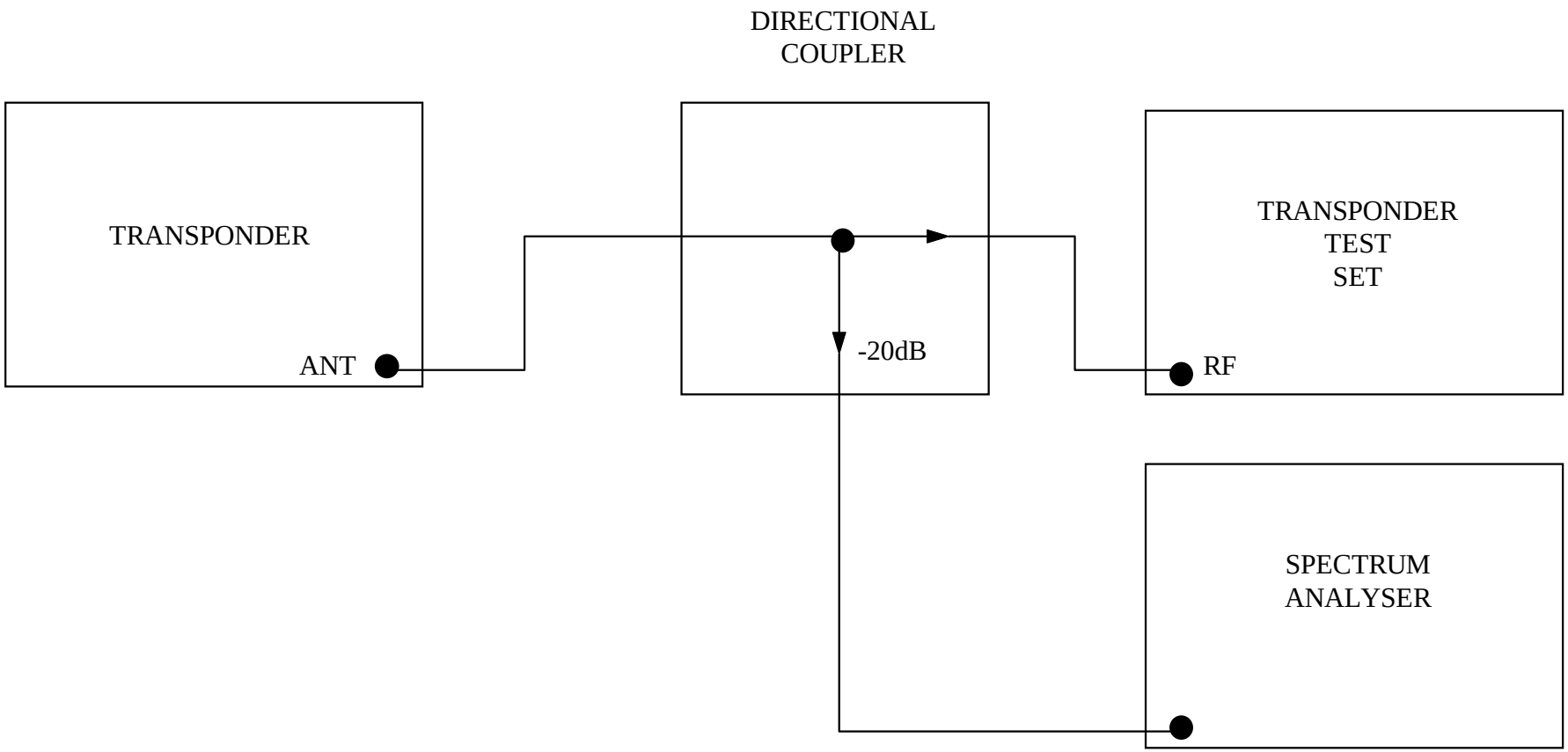

FIGURE 5-4: TEST EQUIPMENT CONNECTION

© EUROCAE, 2003

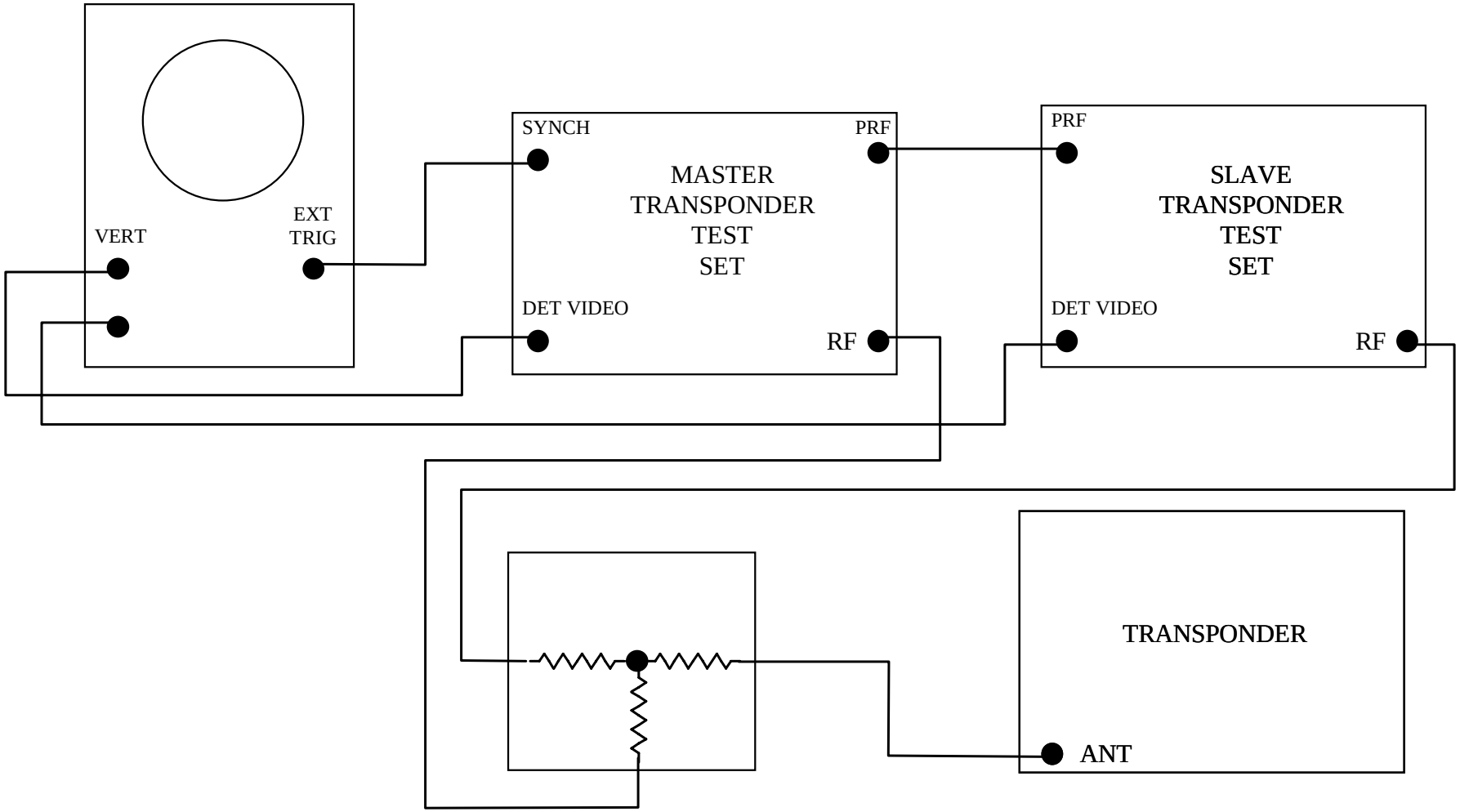

FIGURE 5-5: TEST EQUIPMENT CONNECTION

© EUROCAE, 2003

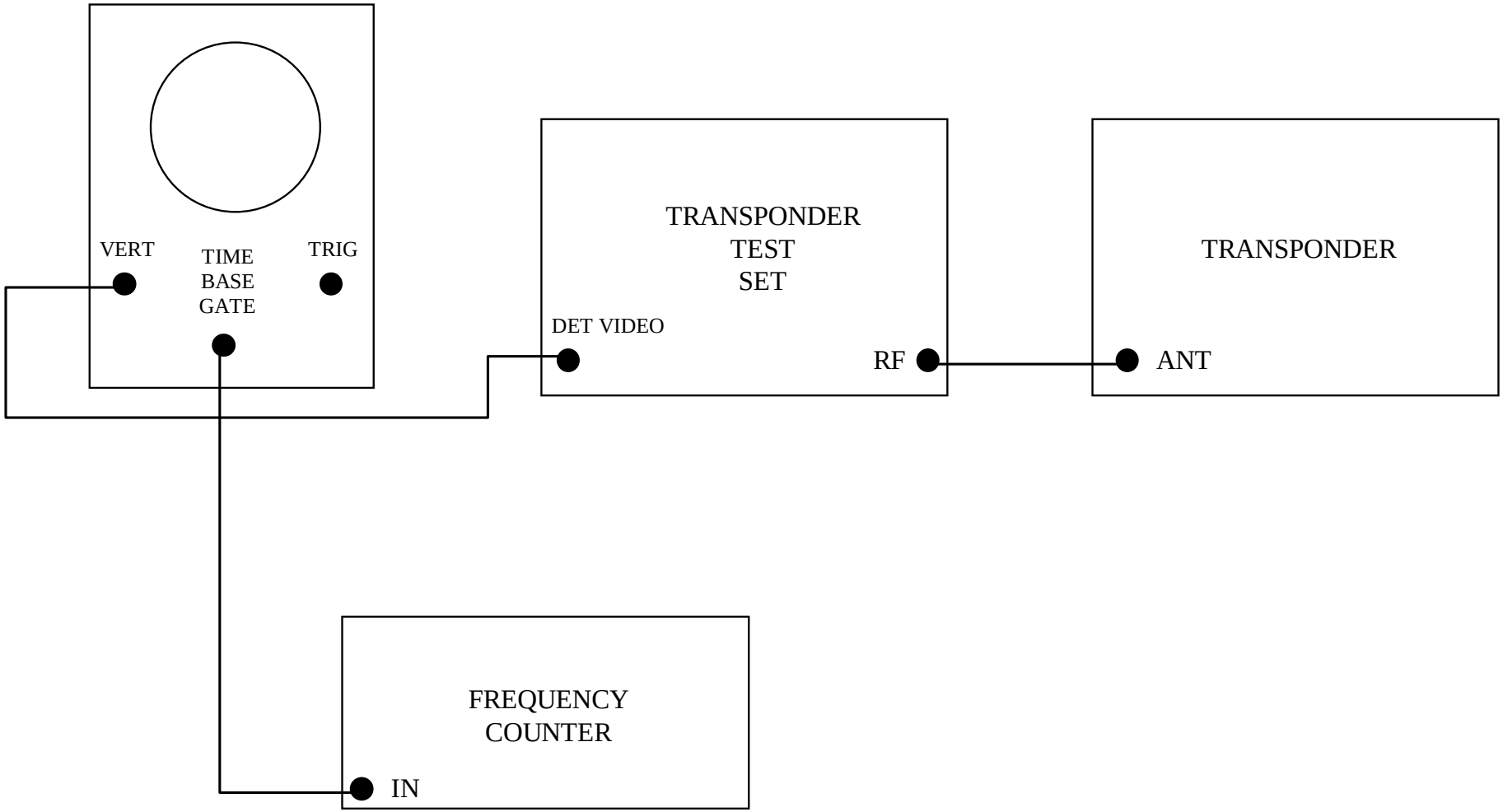

FIGURE 5-6: TEST EQUIPMENT CONNECTION

© EUROCAE, 2003

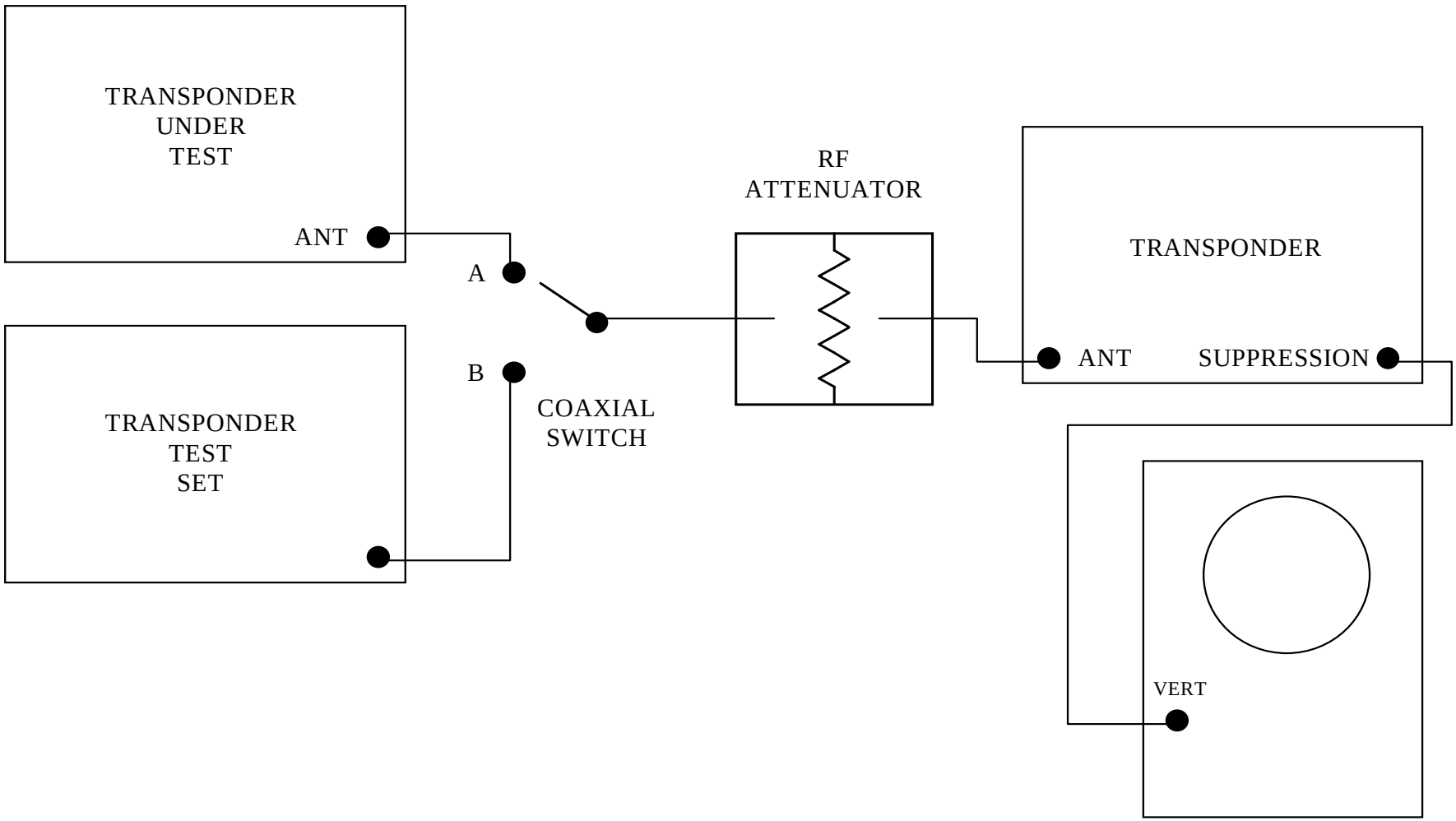

FIGURE 5-7: TEST EQUIPMENT CONNECTION

© EUROCAE, 2003

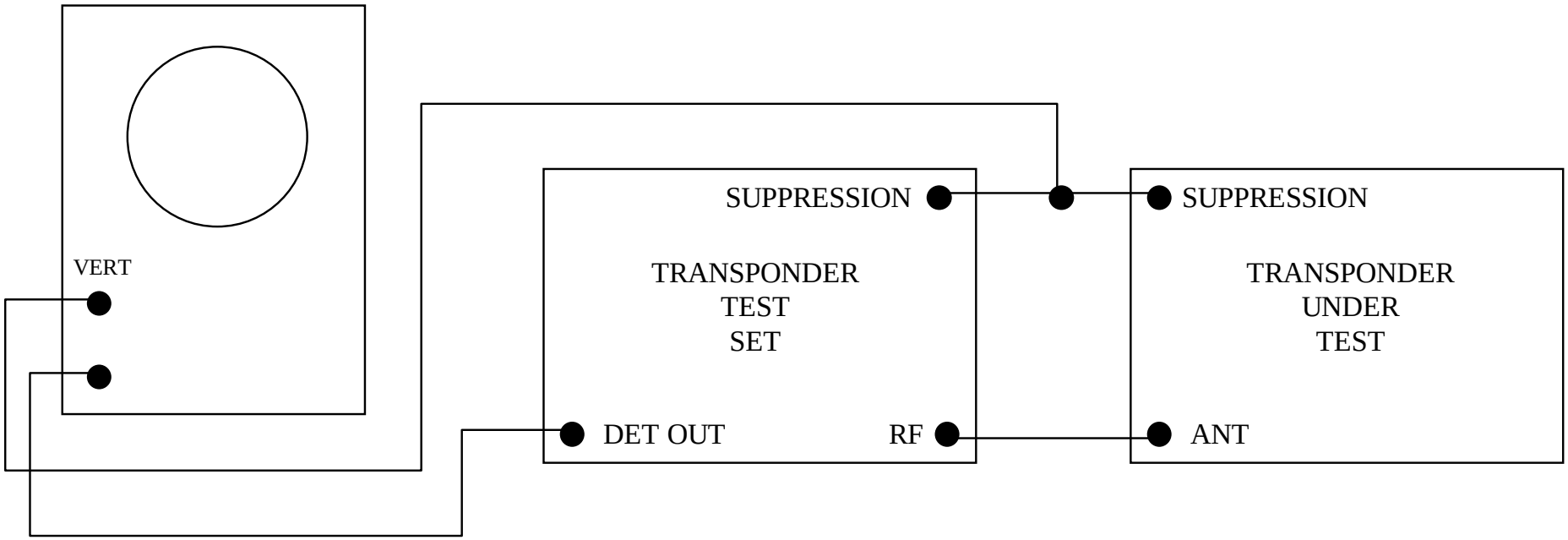

FIGURE 5-8: TEST EQUIPMENT CONNECTION

© EUROCAE, 2003

Draft change proposal[257] after WG 49 meeting 4

CHAPTER 6

INSTALLED EQUIPMENT PERFORMANCE

6.1 INTRODUCTION

Installed performance shall be consistent with that specified in Chapter 3, which was verified through bench and environmental tests. However, certain performance parameters may be affected by the physical installation and can only be verified after installation. The installed performance specified below takes this into consideration.

6.2 EQUIPMENT INSTALLATION

6.2.1 Accessibility

a. Controls provided for in-flight operation shall be readily accessible from the operator's normal seated position.

Displayed information shall be clearly viewable, without obstruction, from the normal seated position(s) of the appropriate operator/crew member(s).

6.2.2 Aircraft Environment

Installed equipment shall be compatible with the environmental conditions present in the specific location in the aircraft where the equipment is installed.

6.2.3 Display Visibility

Displays shall be readable from the crew members' normal position in all ambient light conditions for which the equipment is required.

NOTE: *Visors, glare-shields or filters may be an acceptable means of controlling daylight visibility.*

6.2.4 Failure Protection

a. Any foreseeable failure of the equipment shall not degrade the normal operation of any other equipment or systems connected to it.

b. The failure of interfaced equipment or systems shall not adversely affect the normal operation of the subject equipment.

6.2.5 Interference Effects

The installed equipment shall be electromagnetically compatible with the aircraft and its systems.

NOTE: *Electromagnetic compatibility problems observed after installation of the equipment may result from such factors as the design characteristics of previously installed systems or equipment and the physical installation itself. It is not intended that the equipment manufacturer design for all installation environments. The installer will be responsible for resolving any incompatibility between the equipment and previously installed equipment. The various factors contributing to the incompatibility shall be considered.*

© EUROCAE, 2003

6.2.6 Inadvertent Turn-off

Protection shall be provided to prevent the inadvertent turn-off of the equipment. Where Hijack functions are provided, to ensure continuous electrical power to the transponders, it shall be demonstrated that when the Hijack Mode is triggered (2.7.2) that unauthorised removal of electrical power to the transponders, via the flight deck circuit breakers, shall not affect the continuous operation of the transponder to output the Hijack Code in both Mode A and Mode S replies.

6.2.7 Transmission Line(s)

The transmission line(s) connecting antenna(s) and transponder(s) shall have impedance, power handling and loss characteristics in accordance with the equipment manufacturer's specifications.

6.2.8 Antenna Location

a. Single Antenna

The antenna shall be installed on the bottom of the aircraft as close to the longitudinal axis of the aircraft as possible.

b. Diversity Transponder Installation

(1) If antenna diversity is used, the transmission lines to the top and bottom antennas shall not differ in electrical length or loss by more than the amount specified by the equipment manufacturer.

(2) The horizontal distance between the top and bottom antennas shall not be greater than 7.6 m (25 ft).

(3) Both antennas shall be mounted as near as possible to the centre line of the fuselage.

NOTE: *Antenna spacing is specified to control apparent jitter caused by path length differences when a diversity transponder switches between antennas.*

6.2.9 Radiation Pattern

The antenna shall have a radiation pattern which is essentially vertically polarised, omnidirectional in the horizontal plane, and have sufficient vertical beamwidth to ensure proper equipment operation during normal aircraft manoeuvres.

6.2.10 Mutual Suppression

If other equipment is installed in the aircraft operating at or near 1 030 and 1 090 MHz, such as DME, mutual suppression shall be used. (See Paragraph 3.15).

6.2.11 Aircraft Power Source

The voltage and voltage tolerance characteristics of the equipment shall be compatible with the aircraft power source of appropriate category as specified in ED-14D.

© EUROCAE, 2003

6.2.11.1 Normal Equipment Operations

The aircraft installation shall ensure that appropriate voltage and voltage characteristics required by the transponder equipment shall be continuously applied to the transponder equipment at all times that the transponder equipment is required to be operational.

NOTE: *This requirement does not apply in situations where power to the transponder equipment must be interrupted in order to prevent possible fire conditions or other emergency conditions determined by the Flight Crew.*

6.2.11.2 Hijack Mode Equipment Operations

The aircraft installation shall apply all reasonable measures to ensure that appropriate voltage and voltage characteristics required by the transponder equipment shall be continuously applied to the transponder equipment at all times that the transponder equipment is functioning in the Hijack Mode. This applies to both the Active On and the Standby transponder equipment.

NOTE: *This requirement does not apply in situations where power to the transponder equipment must be interrupted in order to prevent possible fire conditions or other emergency conditions determined by the Flight Crew.*

6.2.12 Single Operational Transponder at One Time

a. The aircraft installation shall ensure that **ONLY ONE** transponder is coupled to the antenna system and capable of delivering interrogation replies or squitter transmissions from the aircraft at **ANY** given time.

b. The aircraft installation shall ensure that **NO** transponder is improperly connected to its antenna system or left in an open-circuit transmission state in which the transponder could emit excessive RF energy into **ANY** aircraft compartment.

6.2.13 Validation of declared on-the-ground status

Note.- While this is only a requirement for aircraft that are equipped with extended squitter funciotnality, this feature is desirable for all aircraft.

Aircraft with an automatic means for determining the on-the-ground condition that are equipped to format extended squitter messages shall perform the following validation check:

If the automatically determined air/ground status is not available or is “airborne”, no validation shall be performed. If the automatically determined air/ground status is available and “on-the-ground” condition is being reported, the air/ground status shall be overridden and changed to “airborne” if the conditions given for the vehicle category in the table below are satisfied,

Determination of airborne status					
A/V category	Ground Speed		Airspeed		Radio Altitude
No information	No change to on-the-ground status				
Weight < 15 500 lbs (7 031 kg)	No change to on-the-ground status				
Weight > or = 15 500 lbs (7 031 kg)	>100 knots	or	>100 knots	or	>50 feet
High Performance (>5g acceleration and 400 knots)	>100 knots	or	>100 knots	or	>50 feet
Rotorcraft	No change to on-the-ground status				

© EUROCAE, 2003

6.3 CONDITIONS OF TEST

The following paragraphs define the conditions under which the tests specified in paragraph 6.4 shall be conducted.

6.3.1 Power Input

Unless otherwise specified, tests shall be conducted with the equipment powered from the aircraft's normal electrical distribution system.

6.3.2 Associated Equipment or Systems

Unless otherwise specified, all electrically operated equipment and systems shall be turned on before carrying out interference tests.

6.3.3 Environment

During the tests, the equipment shall not be subjected to environmental conditions that exceed those specified by the equipment manufacturer.

6.3.4 Adjustment of Equipment

The equipment under test shall be properly aligned and adjusted in accordance with the manufacturer's recommended practices before the application of the specified tests.

6.3.5 Warm-up Period

Tests shall be conducted after a warm-up (stabilisation) period of not less than that specified by the manufacturer.

6.4 TEST PROCEDURES FOR INSTALLED EQUIPMENT PERFORMANCE

6.4.1 General

a. The following test procedures provide one means of determining installed equipment performance.

b. Although specific test procedures are prescribed, it is recognised that other methods may be preferred by the installer/manufacturer.

c. Such alternative procedures may be used if they provide at least equivalent information, in which case, the procedures described in this chapter shall be used as one criterion in evaluating the acceptability of the alternative procedures.

d. The equipment shall have been tested to verify compliance with the performance criteria specified in Chapter 3.

6.4.2 Guidance for Testing of Transponders

6.4.2.1 Introduction

This section provides guidance to aircraft maintenance organisations and maintenance personnel relating to ATC transponder testing. It includes information regarding the precautions to be taken in order to minimise the possibility of causing nuisance warnings to ACAS equipped aircraft.

ACAS equipped aircraft provide flight crew with a collision avoidance system, independent of the ATC system, by alerting the crew to potential collision hazards. It

© EUROCAE, 2003

also can provide the crew with climb or descend commands which must be followed. Transponder testing is one source of 'nuisance' ACAS warnings. The problem of 'nuisance' ACAS warnings is more noticeable when ground testing of transponders takes place at airfields located beneath Terminal Control Areas or in the vicinity of Control Areas and Zones where air traffic movements are likely to be numerous. The following information provides guidelines which should be followed to minimise this risk.

6.4.2.2 Ground Testing Guidance

a. When not required, ensure all transponders are selected to 'OFF' or 'Standby'.

b. **Before starting any test, contact the local Air Traffic Control Unit** and advise them of your intention to conduct transponder testing. Advise the Air Traffic Unit of your start time and test duration. Also inform them of the altitude(s) at which you will be testing, your intended Aircraft Identification (Flight Id) and your intended Mode A code. See para 6.4.2.2 c and d. Note: Certain altitudes may not be possible due to over flying aircraft.

c. Set the Mode A Code to 7777 or 7776. *Note: The Mode A Code's ' 7777' and '7776' were assigned as 'test' codes, by the ORCAM Users Group, specifically for testing transponders.*

d. Set the Aircraft Identification (Flight Id) with the first 8 characters of the company name. This is the name of the company conducting the tests.

e. Where possible, perform the testing inside a hanger to take advantage of any shielding properties it may provide.

f. As a precaution, antenna transmission absorption covers should be used whether or not testing is performed inside or outside.

g. When testing the altitude (Mode C or S) parameter, minimize the RF radiation by adequate screening or absorption devices or physically connect the ramp test set to the antenna system.

h. In between testing, i.e. to transition from one altitude to another, select the transponder to 'standby' mode.

i. If testing transponder parameters other than 'altitude', set altitude to minus one thousand feet or field elevation. This will minimise the possibility of ACAS warning to airfield and overflying aircraft.

j. When testing is complete select the transponder(s) to 'OFF' or 'Standby'.

6.4.~~2~~3 Guidance for Testing of Transponders

© EUROCAE, 2003

6.4.~~2~~3.1 Introduction

This section provides guidance to aircraft maintenance organisations and maintenance personnel relating to ATC transponder testing. It includes information regarding the precautions to be taken in order to minimise the possibility of causing nuisance warnings to ACAS equipped aircraft.

ACAS equipped aircraft provide flight crew with a collision avoidance system, independent of the ATC system, by alerting the crew to potential collision hazards. It also can provide the crew with climb or descend commands which must be followed. Transponder testing is one source of 'nuisance' ACAS warnings. The problem of 'nuisance' ACAS warnings is more noticeable when ground testing of transponders takes place at airfields located beneath Terminal Control Areas or in the vicinity of Control Areas and Zones where air traffic movements are likely to be numerous. The following information provides guidelines which should be followed to minimise this risk.

6.4.~~2~~3.2 Ground Testing Guidance

a. When not required, ensure all transponders are selected to 'OFF' or 'Standby'.

b. **Before starting any test, contact the local Air Traffic Control Unit** and advise them of your intention to conduct transponder testing. Advise the Air Traffic Unit of your start time and test duration. Also inform them of the altitude(s) at which you will be testing, your intended Aircraft Identification (Flight Id) and your intended Mode A code. See para 6.4.2.2 c and d. Note: Certain altitudes may possible due to over flying aircraft.

c. Set the Mode A Code to 7776 (or Mode A code agreed with Air Traffic Control Unit).

d. Set the Aircraft Identification (Flight Id) with the first 8 characters of the company name. This is the name of the company conducting the tests.

e. Where possible, perform the testing inside a hanger to take advantage of any shielding properties it may provide.

f. As a precaution, antenna transmission covers should be used whether or not testing is performed inside or outside.

g. When testing the altitude (Mode C or S) parameter, radiate directly into the ramp test set via the prescribed attenuator.

h. In between testing, i.e. to transition from one altitude to another, select the transponder to 'standby' mode.

© EUROCAE, 2003

i. If testing transponder parameters other than 'altitude', set altitude to -1000 feet (minus 1000 feet) or less. This will minimise the possibility of ACAS warning to airfield and overflying aircraft.

j. When testing is complete select the transponder(s) to 'OFF' or 'Standby'.

6.4.~~3~~4 Ground Test Procedures

a. Conformity Inspection

(1) Visually inspect the installed equipment to determine the use of acceptable workmanship and engineering practices.

(2) Verify that proper mechanical and electrical connections have been made and that the equipment has been located and installed in accordance with the manufacturer's recommendations.

b. Equipment Function

Vary all controls of the equipment through their full range to determine that the equipment is operating according to the manufacturer's instructions and that each control performs its intended function.

c. Interference Effects

With the equipment energised,

(1) individually operate each of the other electrically operated aircraft equipment and systems to determine that no significant interference effects are present;

(2) evaluate all reasonable combinations of control settings and operating modes;

(3) operate communication and navigation equipment on the low, high and at least one but preferably four mid-band frequencies;

(4) if appropriate, repeat the tests using the aircraft emergency power supplies.

d. Equipment Accessibility

Determine that all equipment controls and displayed data are readily accessible and easily interpreted.

6.4.~~4~~5 Installed Equipment Performance Tests

The following tests include procedures generally demanded by airworthiness authorities to be carried out on a regular basis to ensure continued performance standards.

6.4.~~4~~5.1 Reply Frequency

Interrogate the installed transponder and verify that the reply frequency is 1090 ± 1 MHz for both Class 1 and Class 2 equipment.

6.4.~~4~~5.2 Framing Pulse Spacing

Verify that the time interval between the leading edges of the two framing pulses is 20.3 ±0.10 µs.

© EUROCAE, 2003

6.4.45.3 Reply Codes

a. Verify that each Mode A reply pulse listed in Table 6-1 is present when the appropriate Mode A code is set.

PULSE	POSITION	4096 CODE
Fl	0.00 µs	-
Cl	1.45 µs	0010
Al	2.90 µs	1000
C2	4.35 µs	0020
A2	5.80 µs	2000
C4	7.25 µs	0040
A4	8.70 µs	4000
X	10.15 µs	-
Bl	11.60 µs	0100
Dl	13.05 µs	0001
B2	14.50 µs	0200
D2	15.95 µs	0002
B4	17.40 µs	0400
D4	18.85 µs	0004
F2	20.30 µs	-
SPI	24.65 µs	-

TABLE 6-1: MODE A REPLY PULSES

b. Using more than one 4096 code, interrogate the transponder a sufficient number of times to verify that the correct 4096 code is transmitted.

c. Verify that the X pulse is not present.

d. Verify that the SPI pulse is transmitted, when selected.

6.4.45.4 Pressure Altitude Transmissions

a. With the altitude digitiser (if fitted) disconnected or disabled verify that

(1) the transponder response to Mode C interrogations consists only of framing pulses Fl and F2, and

(2) the transponder response to Mode S interrogations UF=4 and UF=20 contains all ZEROs in the AC field.

b. With the altitude digitiser connected, but with the altitude switch in the "OFF" position, verify that

(1) the transponder response to Mode C interrogations consists only of framing pulses Fl and F2, and

(2) the transponder response to Mode S interrogations UF=4 and UF=20 contains all ZEROs in the AC field.

6.4.45.5 Altitude Reporting Test

a. If the Mode S transponder is installed in an aircraft fitted with an altitude source quantised to greater that 25 ft, the 100 ft quantisation will be used. A sufficient number of test points should be checked to ensure that the altitude reporting equipment and transponder perform their intended function through their entire range while ascending or descending. Tests of each altitude code segment of the encoder (2 300, 2 500, 3 800, 4 300, 4 800, 6 800, 14 800 30 800, 70 800, 90 800, 110 800 and 126 700 if available) are sufficient to ensure proper operation of each altitude code segment of the encoder. Verify in all cases that the Q bit is set to 0.

© EUROCAE, 2003

b. If the Mode S transponder is installed in an aircraft fitted with an altitude source quantised to 25 ft or less, the 25 ft quantisation is used up to a pressure altitude of 50 1875.5 ft. A sufficient number of test points should be checked to ensure that the altitude reporting equipment and transponder perform their intended function through their entire range while ascending or descending.

(1) Tests of altitude codes below a pressure altitude of 50 187.5 shall verify that the Q bit is set to 1 and shall as a minimum verify that the altitude report is correct when the input indicates pressure altitudes of 17 050 ft and 34 125.

(2) Tests shall be performed to verify that correct altitude is reported using 100 ft quantisation when the input indicates a pressure altitude above 50 187.5 ft. use input values of 50 188, (other values 50 800, 70 800, 90 800, 110 800 and 126 700 should be used if available) Verify in all cases that the Q bit is set to 0

c. Verify in both a and b above that the correspondence error value of the altimeter system is 125 feet or less.

NOTE: *Precautions must be taken during altitude reporting tests to prevent nuisance ACAS Traffic Advisories and ACAS Resolution Advisories to aircraft flying in the area.*

6.4.~~4~~5.6 Reply Pulse Width

Verify that the duration of the Fl and F2 pulses between the 0.5 amplitude points on the leading and trailing edges is 0.45 ±0.10 µs, with the transponder replying on Mode A, code 0001, and code 7477.

6.4.~~4~~5.7 Receiver Sensitivity

a. Verify that for Mode A/C interrogations the receiver sensitivity of the equipment at the antenna end of the transmission line is -73 dBm, ±4 dB.

b. Verify that for Mode S P6 type interrogations the sensitivity of the equipment at the antenna end of the transmission line is -74 dBm, ±3 dB.

6.4.~~3~~5.8 Transmitter Power Output

a. Verify that Class 1 transponders have a peak pulse power at the antenna end of the transmission line of at least +21 dBW and not more than +27 dBW.

b. Verify that Class 2 transponders have a peak pulse power at the antenna end of the transmission line of at least +18.5 dBW and not more than +27 dBW.

6.4.~~4~~5.9 Received Reply

a. Interrogate the equipment with UF=11 and record the AA field in the reply

b. Interrogate the equipment with UF=4 (or UF=5) and the aircraft address assigned by the appropriate authority, and verify received reply.

NOTE: *Where the aircraft has a dual transponder installation this test shall be performed with the transponder in both positions.*

c. Interrogate the equipment, in turn, with UF=4 or UF=5

(1) an aircraft address consisting of all ONES, and

(2) an aircraft address consisting of all ZEROs.

Verify that in each case that there is no received reply.

6.4.~~4~~5.10 Airspeed Fixed Field

Interrogate the equipment to confirm the maximum airspeed report.

© EUROCAE, 2003

6.4.45.11 On-the-Ground Condition

If a means for automatically indicating the on-the-ground condition (e.g. a weight on wheels or strut switch) is available

Verify that the equipment correctly reports the "on-the-ground" condition in the CA, FS and VS fields.

Verify that the equipment correctly reports the "airborne" condition in the CA, FS, and VS fields.

If a means for automatically indicating the on-the-ground condition (e.g. a weight on wheels or strut switch) is not available

Verify that the FS and VS fields indicate that the aircraft is airborne and that the CA field indicates that the aircraft is either airborne or on the ground (CA=6).

Also verify that when the unit is in the "inhibit replies" condition (on the ground), the transponder continues to generate Mode S squitters and replies to discretely-addressed Mode S interrogations (UF=0,4,5,16,20,21,24), but does not reply to Mode A/C/S All-Call or Mode S-Only All-Call interrogations (some installations may inhibit Mode A/C).

If the unit is not in the "inhibit replies" condition (Airborne condition), verify that the transponder continues to generate Mode S squitters and also replies to Mode A/C, Mode A/C/S All-Call or Mode S Only all Call and discretely-addressed Mode S interrogation (UF=0,4,5,16,20,21,24),

6.4.45.12 Aircraft Identification (AIS)

Interrogate the equipment with UF=4 or 5, and correct aircraft address with RR=18 and DI≠7 or DI=7 and RRS=0. Verify that the equipment correctly reports the AIS information in the MB field of the reply.

6.4.45.13 Single Operational Transponder at One Time

Verify:

a. That **ONLY ONE** transponder and associated antenna system is capable of delivering interrogation replies or squitter transmissions from the aircraft at **ANY** given time, and

b. That **NO** transponder is capable of radiating RF energy into any compartment of the aircraft due to improper connection to the antenna system or radiation into an open-circuit.

6.4.45.14 Hijack Mode Operations

Caution: The following tests must be conducted with the full co-operation of affected Air Traffic Control (ATC) Centres unless sufficient shielding can be given to the Mode S transponder antennas to stop replies being received by the ATC Centres.

NOTE: *The following requirements apply to the Hijack Mode function only when implemented internal to the Mode-S Transponder unit.*

Perform the following installed test sequence independently for each transponder in the installation.

a. Hijack Mode Initialization, Verification, and Exit – Configuration One

NOTE: *This procedure applies to the **Active On** transponder in a Dual Antenna Systems and Dual Diversity Transponder configuration and to both transponders in a Single Antenna System and Dual Diversity Transponder configuration.*

(1). Hijack Mode Initialization and Verification – Configuration One

© EUROCAE, 2003

With the transponder being in the Active On and Airborne states and **NOT** in the Hijack Mode, initiate the Hijack Mode via all of the installed methods identified in 2.7.2.1, 2.7.2.2, or 2.7.2.3.

At least ten seconds after initiating the Hijack Mode, interrogate the transponder with Mode-A, Mode S UF = 5 and 21 interrogations for a minimum period of 20 seconds.

Verify that the transponder system:

(a). Replies to all Mode-A interrogations with the 4096 Identity Code of "7500".

(b). Replies to all UF = 5, UF = 21 Mode-S interrogations with an ID field of "7500".

(c). Properly indicates that it IS in the Hijack Mode.

(2). Hijack Mode Exit– Configuration One

Starting with the conditions as they existed after 6.4.3.14.a.(1).(c)., provide the transponder with a 4096 Identity Code of "6767", set the transponder to the On-Ground state and activate the means to exit the Hijack Mode. Interrogate the transponder with Mode-A, Mode S UF = 5, UF = 21 interrogations for a minimum period of 20 seconds.

Verify that the transponder system:

(a). replies to all UF = 5, UF = 21 Mode-S interrogations with an ID field of "6767".

(b). Properly indicates that it **IS NOT** in the Hijack Mode.

(3) repeat (1) and (2) for all installed means (e.g. Pilot and Co-Pilot controls, Pilot and Co-Pilot discrete buttons) to activate the hijack mode.

(4) repeat (1), (2) and (3) but with the difference that the Active On transponder is in the Ground state when (1) is performed.

b. Standby Hijack Mode Initialization, Verification, and Exit – Configuration Two

NOTE: *This procedure applies to **Standby** transponders intended for Dual Antenna System and Dual Diversity Transponder configurations.*

(1). Standby Hijack Mode Initialization – Configuration Two

With the transponder being in the Standby and Airborne states and **NOT** in the Standby Hijack Mode, initiate the Hijack Mode via all of the installed methods identified in 2.7.2.1, 2.7.2.2, or 2.7.2.3.

At least ten seconds after initiating the Hijack Mode, verify that the transponder properly indicates that it **IS** in the Standby Hijack Mode.

(2). Standby Hijack Mode Verification – Configuration Two

Attempt to place the transponder into the Active On mode and interrogate the transponder with Mode-A, Mode S UF = 5 and 21 interrogations for a minimum period of 20 seconds.

Verify that the transponder system:

(a). Does **NOT** reply to any of the interrogations.

(b). Properly indicates that it **IS** in the Standby Hijack Mode.

(3). Standby Hijack Mode Exit – Configuration Two

Ensure that the 4096 code provided to the transponder is set to a setting other than "7500".

Set the transponder to the Standby and On-Ground states, then Activate the means to exit the Hijack Mode.

© EUROCAE, 2003

Verify that the transponder properly indicates that it **IS NOT** in the Standby Hijack Mode.

(4) repeat (1), (2) and (3) for all installed means (e.g. Pilot and Co-Pilot controls, Pilot and Co-Pilot discrete buttons) to activate the hijack mode.

(5) repeat (1), (2), (3) and (4) but with the difference that the Standby transponder is in the Ground state.

6.5 FLIGHT TEST PROCEDURES

This guidance material offers examples of flight test procedures for demonstrating selected performance functions. Flight demonstration of installed performance may be required by the aircraft operator or by airworthiness inspection agencies.

A schedule must be arranged with the area air traffic control facility so that a controller is available to observe the transponder reply and communicate with the test aircraft to confirm performance of the transponder.

a. Select a test area such that line-of-sight signal propagation is ensured.

b. So that ATC can confirm valid returns through normal flight attitudes, test manoeuvres may include standard rate turns through 360 degrees, climbs and descents.

c. Verification of Mode A codes selected, and reported altitude responses to Mode C should also be checked.

© EUROCAE, 2003

Draft change proposal[269] after WG 49 meeting 4

LIST of MEMBERS of EUROCAE WORKING GROUP 49 (Amended 11.02.2003)

Chairman	Bev NICHOLS	C-Bev Ltd
Secretary	~~Frank ZIEGLER~~	~~CIMS GmbH~~
Members	~~Steve ALPINE~~	~~NATS~~
	~~Rene CECCOM~~	~~Airbus SA~~
	~~Beatrice CROUZIER~~	~~STNA~~
	~~Andrew D. ELLIS~~	~~British Airways~~
	~~Wolfgang GRUNO~~	~~Ministry of Transport Germany~~
	~~Helmut GÜNZEL~~	~~DFS~~
	Kevin HALLWORTH	CAA-SRG
	~~Peter V. HEYNINGEN~~	~~NLR~~
	~~Alain JANOT~~	~~SFACT~~
	~~Uwe KLARE~~	~~EADS~~
	Dieter KUNZE	Becker Flugfunkwerk GmbH
	Enrico PUPILLO	Marconi Mobile
	Bernd ROTH	LBA
	Pierre RUAULT	EUROCONTROL
	Bob SAFFELL	Rockwell Collins
	Cyro STONE	ACSS L-3

© EUROCAE, 2003

ED-73B IMPROVEMENT SUGGESTION FORM

Name: _____ Company: _____

Address:_____

City: _____ State, Province:_____

Postal Code, Country: _____ Date: _____

Phone: _____ Fax: _____

Email:_____

DOCUMENT : ED-73B SEC: _____ PAGE:_____ LINE: _____

[ ] Documentation error (Format, punctuation, spelling)

[ ] Content error

[ ] Enhancement or refinement

Rationale (Describe the error or justification for enhancement): _____

_____

_____

Proposed change (Attach marked-up text or proposed rewrite): _____

_____

_____

_____

_____

Please provide any general comments for improvement of this document:

_____

_____

_____

_____

_____

Return completed form to:

EUROCAE
Attention: Secretary-General ED-73B
17 rue Hamelin
Paris Cedex 75783, France
Email: eurocae@eurocae.com

or

Web: www.eurocae.org
Free workspace
Comments on published documents
ED-73B Improvement Suggestion Form

© EUROCAE, 2003